The Commissioner of Patents
PO Box 200
WODEN ACT 2606

F B RICE & CO
SYDNEY NSW
Speed Dial 511

AUSTRALIA
Patents Act 1990

665688

PATENT REQUEST: STANDARD PATENT

We, ESSELTE DYMO N.V., being the person(s) identified below as the Applicant, request the grant of a standard patent to the person identified below as the Nominated Person, for an invention described in the accompanying complete specification.

Full application details follow.

Applicant: ESSELTE DYMO N.V.

Address: Industriepark-Noord 30 PO Box 85 B-2700 St Niklaas Belgium

Nominated Person: ESSELTE DYMO N.V.

Address: Industriepark-Noord 30 PO Box 85 B-2700 St Niklaas Belgium

Invention Title: "Thermal printing device"

Name(s) of Actual Inventor(s): Charles Robert SIMS; Michael Andrew BEADMAN

Address for service is: F.B. RICE & CO.,
28A Montague St,
Balmain N.S.W. 2041

Attorney Code: RI

BASIC CONVENTION APPLICATION(S) DETAILS

Application No	Country	Country Code	Date of Application
9215782.5	United Kingdom	UK	24 July 1992

We are not an eligible person described in Section 33 - 36 of the Act.

Drawing number recommended to accompany the abstract Fig. 1

Dated this 23 day of July 1993

ESSELTE DYMO N.V.

S 039178 230793

By: _____
Registered Patent Attorney

PW/WAW2/60824

Australia Patents Act 1990

Notice of Entitlement

(to be filed before acceptance)

I/We Paul Charles WHENMAN
being authorised by ESSELTE DYMO N.V.
of Industriepark-Noord 30, PO Box 85, B-2700 St.Niklaas, BELGIUM

the applicant in respect of an application for a patent for an invention entitled Thermal printing device

filed under Australian Application No. _____ , state the following:-

Part 1 - *Must be completed for all applications.*

☐ The person~~(s)~~ nominated for the grant of the patent:
~~is/are the actual inventor(s)~~
~~or~~

☒ has, for the following reasons, gained entitlement from the actual inventor(s):
Technology Partnership Limited is a person who would if a patent were granted upon an application made by the actual inventor(s) be entitled to have the patent assigned to it and by virtue of an agreement with Technology Partnership Limited, Esselte Dymo N.V. is entitled to the invention.

Part 2 - *Must be completed if the application is a Convention application.*

The person~~(s)~~ nominated for the grant of the patent is/~~are:~~

☒ the applicant(s) of the basic application(s) listed on the patent request form
or

☐ ~~entitled to rely on the basic application(s) listed on the patent request form by reason of the following:~~

The basic application~~(s)~~ listed on the request form is/~~are~~ the first application~~(s)~~ made in a Convention country in respect of the invention.

Part 3 - *must be completed if the application was made under the PCT and claims priority.*

~~The person(s) nominated for the grant of the patent is/are:~~

☐ the applicant(s) of the application(s) listed in the declaration under Article 8 of the PCT
or

☐ entitled to rely on the application(s) listed in the declaration under Article 8 of the PCT by reason of the following:-

The basic application(s) listed in the declaration made under Article 8 of the PCT is/are the first application(s) made in a Convention country in respect of the invention.

Signed: _____ Date: 23 July 1993

PAUL CHARLES WHENMAN

Status: Patent Attorney

F.B. RICE & CO. PATENT ATTORNEYS

AU9342177

(12) PATENT ABRIDGMENT (11) Document No. AU-B-42177/93
(19) AUSTRALIAN PATENT OFFICE (10) Acceptance No. 665688

(54) Title
THERMAL PRINTING DEVICE

(51)[5] International Patent Classification(s)
B41J 002/325

(21) Application No. : **42177/93** (22) Application Date : **23.07.93**

(30) Priority Data

(31) Number	(32) Date	(33) Country
9215782	**24.07.92**	**GB UNITED KINGDOM**

(43) Publication Date : **27.01.94**

(44) Publication Date of Accepted Application : **11.01.96**

(71) Applicant(s)
ESSELTE DYMO N.V.

(72) Inventor(s)
CHARLES ROBERT SIMS; MICHAEL ANDREW BEADMAN

(74) Attorney or Agent
F B RICE & CO , 28A Montague Street, BALMAIN NSW 2041

(56) Prior Art Documents
US 5111216
GB 2161754
US 5028934

(57) Claim

1. A thermal printing device having means for receiving a tape holding case housing a supply of an image transfer ribbon capable of printing an image in a particular colour;

a print head having a column of printing elements for printing an image on an image receiving tape column by column;

means for moving the image receiving tape through a printing zone in overlap with said image transfer ribbon so that a message can be printed onto the image receiving tape, said image receiving tape moving in a printing direction by one column width between the printing of successive columns;

means for determining when a particular portion of the message to be printed has been printed in the particular colour on a first portion of the image receiving tape and for preventing further movement of the image receiving tape while image transfer ribbon of a different colour is located in overlap with said first portion; and

means for restarting movement of said image receiving tape at a second portion thereof spaced from said image receiving tape so as to print a next portion of said message in said different colour on said second portion of said image receiving tape.

.../2

9. A method of printing a label in more than one colour comprising:

formulating a message to be printed as a plurality of pages;

for each page storing data relating to characters to be printed, end-of-page data denoting the end of a page and colour data defining the colour of print;

printing a first one of said pages using image transfer ribbon of a first colour on a first portion of an image receiving tape and preventing further printing on detection of end-of-page data;

exchanging said image transfer ribbon for image transfer ribbon of a different colour, said image transfer ribbon of the different colour being arranged to overlap with said image receiving tape at a second portion thereof spaced from said first portion; and

printing a next one of said pages on a second portion of the image receiving tape.

665688

AUSTRALIA

Patents Act 1990

ESSELTE DYMO N.V.

ORIGINAL
COMPLETE SPECIFICATION
STANDARD PATENT

Invention Title:

"Thermal printing device"

The following statement is a full description of this invention including the best method of performing it known to us:-

This invention relates to a thermal printing device.

Thermal printing devices of the general type with which the present invention is concerned are known. They operate with a supply of tape arranged to receive an image and a means for transferring an image onto the tape. In one known device, a tape holding case holds a supply of image receiving tape and a supply of an image transfer ribbon, the image receiving tape and the transfer ribbon being passed in overlap through a printing zone of the printing device. At the print zone, a thermal print head cooperates with a platen to transfer an image from the transfer ribbon to the tape. A printing device operating with a tape holding case of this type is described for example in EP-A-0267890 (Varitronics, Inc.). Other printing devices have been made in which letters are transferred to an image receiving tape by a dry lettering or dry film impression process. In all of these printing devices, the construction of the image receiving tape is substantially the same. That is, it comprises an upper layer for receiving an image which is secured to a releaseable backing layer by a layer of adhesive.

Once an image or message has been printed on the tape, that portion of the tape is cut off to enable it to be used as a label. The releaseable backing layer is removed from the upper layer to enable the upper layer to be secured to a surface by means of the adhesive layer.

In another known printing device, described in EP-A-0322918 (Brother Kogyo K.K.), a tape holding case houses a supply of a transparent image receiving tape and a supply of an image transfer ribbon. The tape holding case also houses a supply of backing tape which comprises a carrier layer having an adhesive layer on its underside to which is secured a

releaseable backing sheet and an adhesive layer on its upper side which can be secured to the image receiving tape after an image has been printed thereon. In this device, the image is printed onto the image receiving tape as a mirror image which, when viewed through the image receiving tape, is the correct way round. With this device, the print is protected when the label is used.

In all of these devices, the colour of the label and the colour of the print are predetermined by the contents of the tape holding case. By the colour of the label reference is made to the upper layer of the image receiving tape of the apparatus described in EP-A-0267890 and to the carrier layer of the device described with reference to EP-0322918. The colour of the print is determined by the colour of the image transfer ribbon. The labels can thus only be printed with ink of a single colour.

~~According to the present invention there is provided a thermal~~ printing device having means for receiving a tape holding case housing a supply of an image transfer ribbon capable of printing an image a particular colour, means for moving an image receiving tape through a printing zone in overlap with said image transfer ribbon so that an image can be transferred from the image transfer ribbon onto the image receiving tape; means for determining when a particular portion of a message to be printed onto the image receiving tape has been printed and for preventing further movement of the image receiving tape while image transfer ribbon of a different colour is located in overlap with said image transfer tape and means for restarting movement of said image receiving tape so as to print a next portion of said message in said different colour.

In one embodiment, the means for preventing further movement of the image receiving tape also causes a signal to be given to a user either audibly or visually to indicate that they ~~should now swap the tape holding cases containing the image~~

AUSTRALIAN PATENT OFFICE LS

According to the present invention there is provided a thermal printing device having means for receiving a tape holding case housing a supply of an image transfer ribbon capable of printing an image in a particular colour;

a print head having a column of printing elements for printing an image on an image receiving tape column by column;

means for moving the image receiving tape through a printing zone in overlap with said image transfer ribbon so that a message can be printed onto the image receiving tape, said image receiving tape moving in a printing direction by one column width between the printing of successive columns;

means for determining when a particular portion of the message to be printed has been printed in the particular colour on a first portion of the image receiving tape and for preventing further movement of the image receiving tape while image transfer ribbon of a different colour is located in overlap with said first portion; and

means for restarting movement of said image receiving tape so as to print a next portion of said message in said different colour on said second portion of said image receiving tape.

In one embodiment, the means for preventing further movement of the image receiving tape also causes a signal to be given to a user either audibly or visually to indicate that they should now swap the tape holding cases containing the image

AUSTRALIAN PATENT OFFICE LS

transfer ribbon of said particular colour for a tape holding case containing an image transfer ribbon of a different colour. Only when the second tape holding case has been inserted does printing resume. In an alternative embodiment, the replacement of the tape holding cases can be carried out automatically by the printing device.

In a further embodiment, the image transfer ribbons can be joined one to another side by side and and would sit in a common tape holding case with means for altering the position of the ribbon to present one colour or another to the print zone.

Preferably, each message to be contained on a label is formulated as a plurality of pages and during such formulation a particular colour is designated for each page. A microprocessor of the printing device stores not only data concerning the characters to be printed on each page but also data identifying the end of a page. During printing, the end of page data indicates to the microprocessor that it should provide the signal to prevent further printing to enable the present tape holding case to be replaced by one containing ink ribbon of a different colour.

In this way, multicolour labels can be printed in a simple and efficient manner.

~~According to another aspect of the invention there is provided~~ a method of printing a label in more than one colour comprising: formulating a message to be printed as a plurality of pages; for each page storing data relating to characters to be printed, end-of-page data denoting the end of a page and colour data defining the colour of print; printing a first one of said pages using image transfer ribbon of a first colour; preventing further printing on detection of end-of-page data; exchanging said image transfer ribbon for image transfer ribbon of a different colour; and printing a next one of said pages.

AUSTRALIAN PATENT OFFICE LS

According to another aspect of the invention there is provided a method of printing a label in more than one colour comprising:

formulating a message to be printed as a plurality of pages;

for each page storing data relating to characters to be printed, end-of-page denoting the end of a page and colour data defining the colour of print;

printing a first one of said pages using image transfer ribbon of a first colour on a first portion of an image receiving tape and preventing further printing on detection of end-of-page date;

exchanging said image transfer ribbon for image transfer ribbon of a different colour, said image transfer ribbon of the different colour being arranged to overlap with said image receiving tape at a second portion thereof spaced from said first portion; and

printing a next one of said pages on a second portion of the image receiving tape.

AUSTRALIAN PATENT OFFICE LS

For a better understanding of the present invention, and to show how the same may be carried into effect, reference will now be made by way of example to the accompanying drawings in which:

Figure 1 is a plan view showing two cassettes inserted in a printing device;

Figure 2 is a diagrammatic sketch showing the control circuitry for the printing device; and

Figure 3 is a diagram showing a label which can be produced using the printing device.

Figure 1 shows in plan view two cassettes arranged in a printing device. The upper cassette 2 contains a supply of image receiving tape which passes through a print zone 3 of the printer to an outlet 5 of the printer. The image receiving tape 34 comprises an upper layer for receiving a printed image on one of its surfaces and having its other surface coated with an adhesive layer to which is secured a releaseable backing layer. The cassette 2 has a recess 6 for accommodating a platen 8 of the printer. The platen 8 is mounted for rotation within a cage moulding 10.

The lower cassette 4 contains a thermal transfer ribbon which extends from a supply spool to a take-up spool within the cassette 4. The thermal transfer ribbon 12 extends through the print zone 3 in overlap with the image receiving tape 34. The cassette 4 has a recess 14 for receiving a print head 16 of the printer. The print head 16 is movable between an operative position, shown in Figure 1, in which it is in contact with the platen and holds the thermal transfer ribbon 12 and the image receiving tape 34 in overlap between the print head and the platen and an inoperative position in which it is moved away from the platen to release the thermal transfer ribbon and image receiving tape. In the operative position, the platen is rotated to cause image receiving tape to be

AUSTRALIAN SEC 104 PATENT OFFICE

driven past the print head and the print head is controlled to print an image onto the image receiving tape by thermal transfer of ink from the ribbon 12. The print head is a conventional thermal print head having an array of pixels each of which can be thermally activated in accordance with the desired image to be printed.

A stepper motor 7 (Figure 2) drives the platen 8 in steps so that for each position of the platen a column of print is printed on the image receiving tape 34. The platen 8 drives the image receiving tape through the print zone under the action of its own rotation. The rotation of the platen and the energisation of the print head 16 are controlled by a microprocessor as described in more detail hereinafter.

The basic circuitry for controlling the printing device is shown in Figure 2. There is a microprocessor chip 100 having read only memory (ROM) 102, a microprocessor 101 and random access memory capacity indicated diagrammatically by RAM 104. The microprocessor is connected to receive data input to it from a data input device such as a keyboard 106. The microprocessor chip 100 outputs data to drive a display 108 via a display driver chip 109 and also to drive the print head 16 and the stepper motor 7 for controlling the platen 8. The microprocessor chip also controls a cutting mechanism including a cutter 17 to cut off lengths of printed tape.

The operation of the printer will now be described. Data to be printed is typed into the printing device using data input keys on the keyboard 106. The data input keys are designated generally by the block 109 but will in practice comprise a plurality of lettered and numbered keys. As the data is entered into the keyboard 106 it is supplied to the microprocessor 101 which drives the display 108 to display the data as it is entered. To do this, for each character which is entered, the microprocessor calls up a stored version of the character from the ROM 102. As the character is stored in compressed form this font data is stored temporarily in the

AUSTRALIAN SEC 104 PATENT OFFICE

RAM 104 and is manipulated by the microprocessor 100 to generate pixel data to form the character. This pixel data is transmitted in one form to the display 108 and in another form to the print head for printing. Character data is not passed to the print head for printing until a print operation is executed. Firstly, the characters for the label are entered and edited using function keys on the keyboard 106 in conjunction with the display 108.

The label is composed by the user as a plurality of pages. Each page has unique characteristics in terms of its print style, size of font and number of lines to be printed. The pages will be printed side by side with a distance between them corresponding to normal character spacing. Pages can be of differing lengths. Where a page has been composed using the display and a next page is to be printed in a different colour, a colour key 120 can be actuated which signals to the microprocessor that it should store end of page colour change data. Formulation of the label can then continue for the next page until there is to be another colour change when the colour key 120 is again depressed. Figure 3 shows a label composed of three pages; PAGE 1, PAGE 2 and PAGE 3. The dotted lines in between the pages are there for diagrammatic purposes only and will not appear on the finished label. As an example, PAGES 1 and 3 are to be printed in black and PAGE 2 is to be printed in red.

Once the final form of the label has been worked out, the microprocessor is aware of the pixel data for each page to be printed and has also calculated the overall length of the label. When a print operation is instigated using the print key 112 a column of pixel data is transmitted to the print head which prints this column on the image receiving tape. The stepper motor then moves the image receiving tape forward by one column width and the next column data is transferred to the print head and printed.

This sequence of operations is carried out until a page has been printed. Then, the end of page signal causes the microprocessor to display a symbol on the display 108 which indicates to a user that he should replace the present tape holding case 4 with a different tape holding case having a red ribbon. While this signal is being displayed, the motor driving the platen is stopped so that further movement of the image receiving tape past the print head is prevented. When the user has replaced the tape holding case printing can be resumed by pressing the print key 112. When the red page has been printed, the same sequence of operation occurs, the black tape cassette is reinserted and the third page is printed.

It will be apparent that the signal which indicates to a user that the tape holding case is to be replaced must be given when the printing operations for printing one page have ceased. That is, the part of the tape being printed at this time is not visible to a user so it would not be possible for a user to print multicolour labels in the absence of this signal.

In the described embodiment, the tape holding case is replaced manually by a user. In another embodiment, the printing device could have means for automatically manipulating tape holding cases so as to replace one by another on receipt of the appropriate signal. In a still further embodiment, a tape holding case could hold a ribbon capable of printing in two colours depending on the position of the ribbon and the colour change signal could then cause the position of the tape holding case to alter.

When the complete label has been printed, the stepper motor moves the image receiving tape through a distance corresponding to the distance between the print head and a zone where cutting is implemented. A cutting operation is then executed by the cutter 17 to cut off the printed portion of the tape constituting the label.

AUSTRALIAN SEC 104 PATENT OFFICE

It will be apparent that the length of each page can be determined by a user and in particular each page can have only a single character. However, where a label is to have multiple lines with different character sizes in each line it can be advantageous to inhibit operation of the colour change key in between characters to ensure that a situation does not arise where an attempt is made to change the colour midway through printing one character.

THE CLAIMS DEFINING THE INVENTION ARE AS FOLLOWS:-

1. A thermal printing device having means for receiving a tape holding case housing a supply of an image transfer ribbon capable of printing an image in a particular colour;

a print head having a column of printing elements for printing an image on an image receiving tape column by column;

means for moving the image receiving tape through a printing zone in overlap with said image transfer ribbon so that a message can be printed onto the image receiving tape, said image receiving tape moving in a printing direction by one column width between the printing of successive columns;

means for determining when a particular portion of the message to be printed has been printed in the particular colour on a first portion of the image receiving tape and for preventing further movement of the image receiving tape while image transfer ribbon of a different colour is located in overlap with said first portion; and

means for restarting movement of said image receiving tape at a second portion thereof spaced from said image receiving tape so as to print a next portion of said message in said different colour on said second portion of said image receiving tape.

2. A thermal printing device as claimed in claim 1 wherein the means for preventing further movement of the image receiving tape is also operable to generate a signal to indicate to a user that the image transfer ribbon of said particular colour should be exchanged for an image transfer ribbon of a different colour.

3. A thermal printing device as claimed in claim 2 wherein the signal is audible.

4. A thermal printing device as claimed in claim 2 wherein the signal is visual.

AUSTRALIAN PATENT OFFICE LS

5. A thermal printing device as claimed in claim 1 which further comprises means arranged to automatically exchange image transfer ribbon of said particular colour for an image transfer ribbon of a different colour.

6. A thermal printing device as claimed in claim 1 wherein a common tape holding case holds two image transfer ribbons and which comprises means for altering the position of the ribbons to present one colour or another to the print zone.

7. A thermal printing device according to claim 1 which comprises means for indicating when a tape holding case containing image transfer ribbon of a particular colour should be exchanged for a tape holding case containing image transfer ribbon of a different colour.

8. A thermal printing device according to claim 1 which comprises a controller operable to store data concerning characters to be printed on each page of a label; data identifying the end of a page; and colour information for each page whereby the end of page data causes the controller to generate a signal to enable the image transfer ribbon of said particular colour to be replaced by an image transfer ribbon of a different colour.

9. A method of printing a label in more than one colour comprising:

formulating a message to be printed as a plurality of pages;

for each page storing data relating to characters to be printed, end-of-page data denoting the end of a page and colour data defining the colour of print;

printing a first one of said pages using image transfer ribbon of a first colour on a first portion of an image receiving tape and preventing further printing on detection of end-of-page data;

AUSTRALIAN PATENT OFFICE

exchanging said image transfer ribbon for image transfer ribbon of a different colour, said image transfer ribbon of the different colour being arranged to overlap with said image receiving tape at a second portion thereof spaced from said first portion; and

printing a next one of said pages on a second portion of the image receiving tape.

10. A thermal printing device having a zone for receiving a tape holding case housing a supply of an image transfer ribbon capable of printing an image in a particular colour;

a print head having a column of printing elements for printing an image on an image receiving tape column by column;

a driver for moving the image receiving tape through a printing zone in overlap with said image transfer ribbon so that a message can be printed onto the image receiving tape, said image receiving tape moving in a printing direction by one column width between the printing of successive column; and

a controller for determining when a particular portion of the message to be printed has been printed in the particular colour on a first portion of the image receiving tape and for preventing further movement of the image receiving tape and for preventing further movement of the image receiving tape while image transfer ribbon of a different colour is located in overlap with said image receiving tape at a second portion thereof spaced from said first portion, and for restarting movement of said image receiving tape so as to print a next portion of said message in said different colour on said second portion of said image receiving tape.

11. A thermal printing device for printing an image on an image receiving tape comprising:

means for receiving a tape holding case housing a supply of image receiving tape on which an image is to be printed;

means for receiving a tape holding case housing a supply of an image transfer ribbon capable of printing a message on said image receiving tape in a particular colour;

AUSTRALIAN PATENT OFFICE LS

means for moving said image receiving tape through a printing zone in overlap with said image transfer ribbon so that an image in said particular colour can be transferred from the image transfer ribbon onto a first portion of the image receiving tape;

means for determining when a particular portion of a message to be printed onto the image receiving tape has been printed in said particular colour and for preventing further movement of the image receiving tape, the means for preventing further movement of the image receiving tape also being operable to generate a signal to indicate to a user that the tape holding case housing said image transfer ribbon of said particular colour should be exchanged for a tape holding case housing a supply of an image transfer ribbon of a different colour, said image transfer tape of said different colour being located in overlap with said image transfer tape at a second portion thereof spaced from said first portion; and

means for restarting movement of said image receiving tape so as to print a next portion of said message in said different colour on said second portion of image receiving tape, when said user has exchanged the tape holding case housing a supply of image transfer ribbon of said particular colour for the tape holding case housing a supply of image transfer ribbon of said different colour.

12. A thermal printing device substantially as hereinbefore described with reference to or as shown in the accompanying drawings.

DATED THIS 27th DAY OF OCTOBER 1995.

ESSELTE DYMO NV
ATTORNEYS FOR THE APPLICANTS:

F.B. RICE & CO



ABSTRACT

A thermal printing device enables labels to be printed in a plurality of colours. When printing in a particular colour has been completed, further printing is prevented while image transfer ribbon of a different colour is exchanged for a first image transfer ribbon. In this way, multiple colour labels can be printed in a simple and efficient manner.

42177/93

FIG.1.

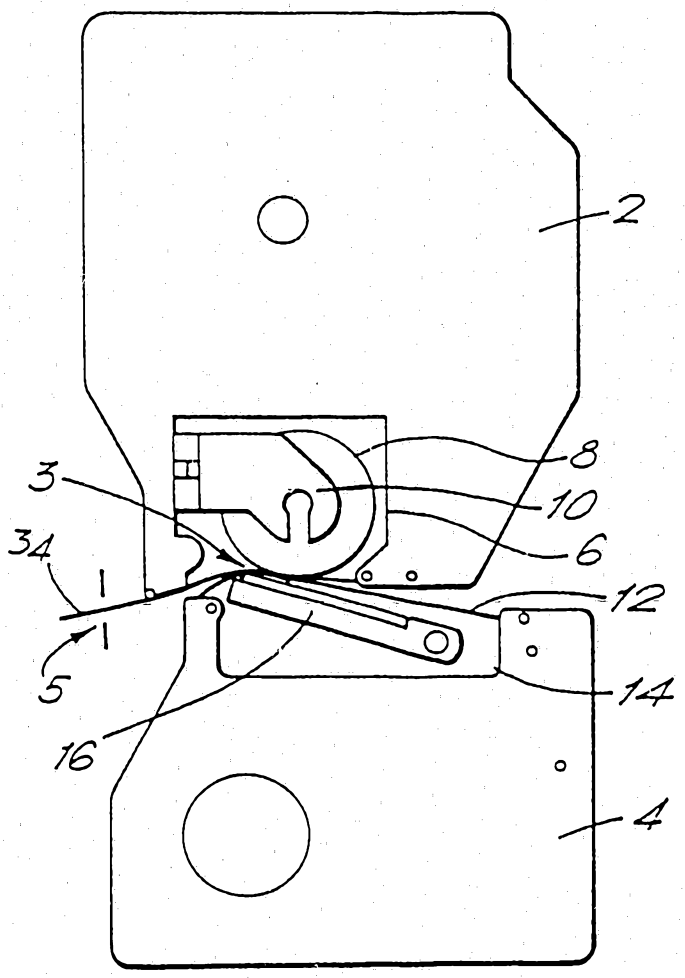

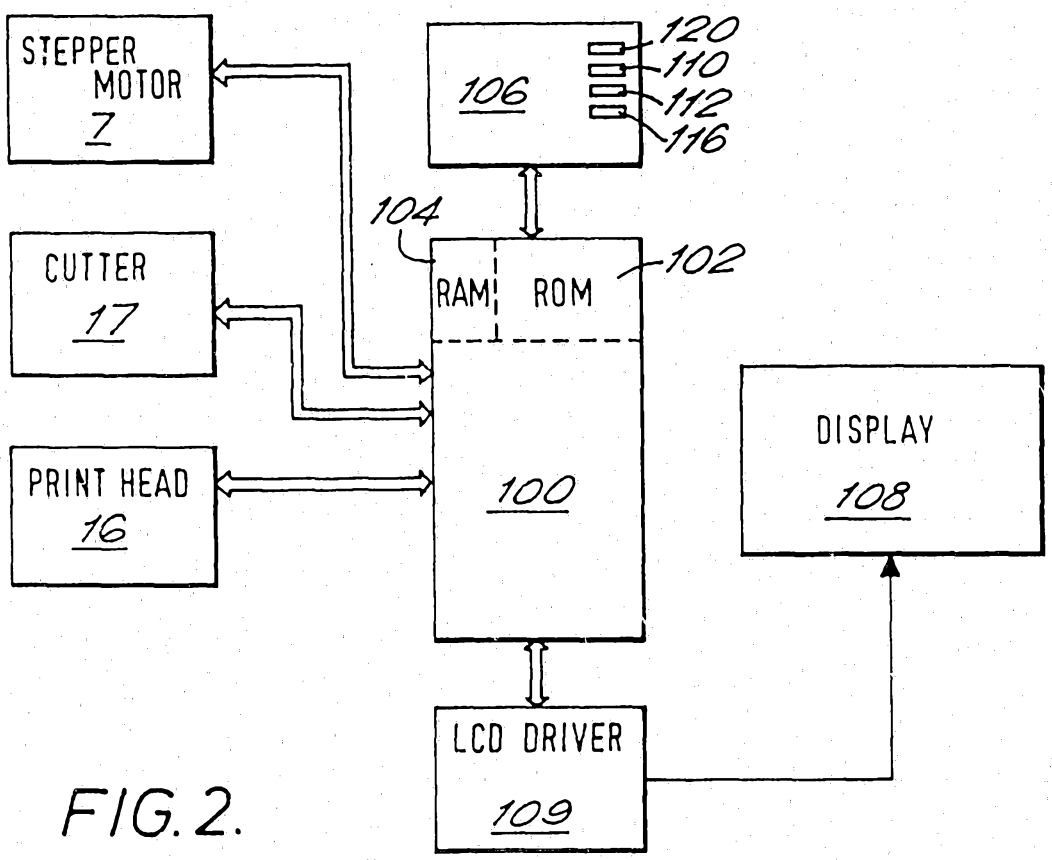
STEPPER MOTOR 7
CUTTER 17
PRINT HEAD 16
106
120
110
112
116
104
102
RAM
ROM
100
DISPLAY 108
LCD DRIVER 109

FIG. 2.

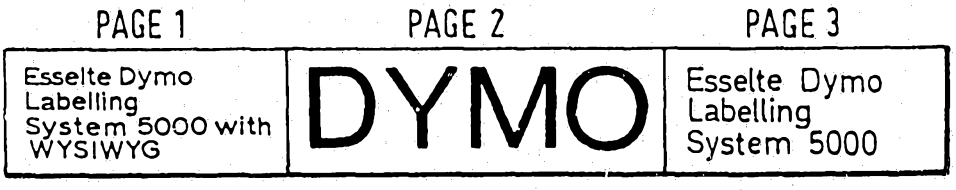
PAGE 1
PAGE 2
PAGE 3
Esselte Dymo Labelling System 5000 with WYSIWYG
DYMO
Esselte Dymo Labelling System 5000

FIG. 3.