March 29, 1938. P. W. DAVIS 2,112,229

VERMIN TRAPPING AND EXTERMINATING DEVICE

Filed Oct. 10, 1936

FIG. 1

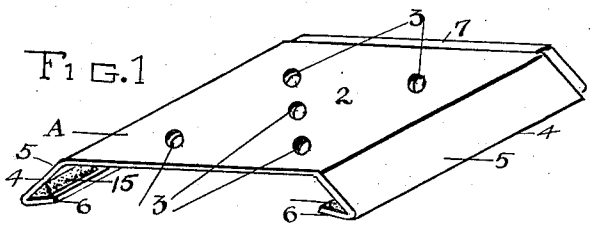

FIG. 2

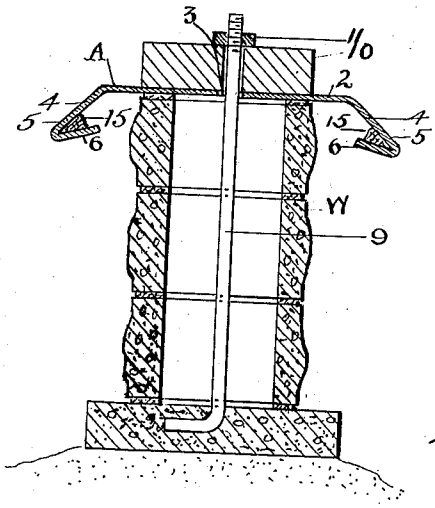

FIG. 3

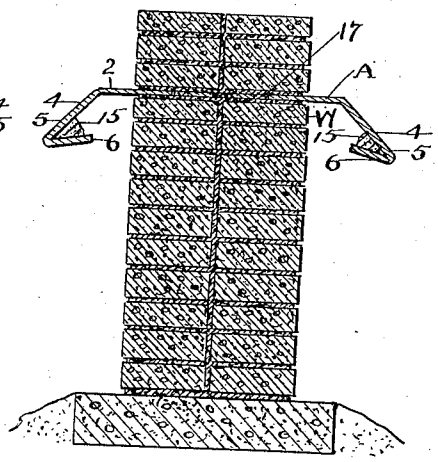

FIG. 4

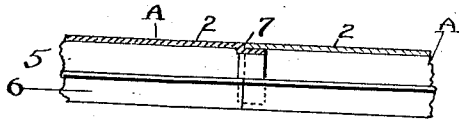

FIG. 5

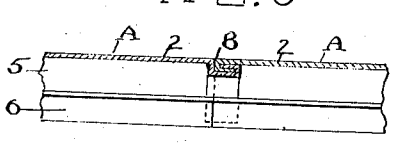

FIG. 6

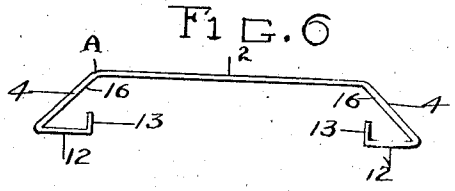

Inventor

PHILLIP W. DAVIS

By Edward M. Fisher

Attorney

Patented Mar. 29, 1938 2,112,229

UNITED STATES PATENT OFFICE

2,112,229

VERMIN TRAPPING AND EXTERMINATING DEVICE

Phillip W. Davis, St. Petersburg, Fla., assignor of three-twentieths to Chas. S. Brock and one-tenth to W. T. Banks, both of St. Petersburg, Fla.

Application October 10, 1936, Serial No. 104,952

2 Claims. (Cl. 72—0.5)

My invention relates particularly to that class of invention which pertains to vermin trapping and exterminating devices, especially termites, and used in connection with building construction especially in the construction of building walls.

An object of my device is to provide protecting means for the effectual contents of my device from rain, snow, and any other destructive element.

A further object of my invention is to provide a device for the purpose herein described which is simple in construction, and may consist of a series of sections each section when of sufficient length being a complete unit within itself, also inexpensive to manufacture.

Another object of my invention is to provide a device of the character described which is adaptable to any wall and is readily installed in both new or old construction.

From the description to follow it will no doubt appear that there are many other advantages to my invention.

I attain these objects by the construction illustrated in the accompanying drawing, in which;—

Fig. 1 is a perspective view of my device.

Fig. 2 is a horizontal sectional view of my device installed in connection with a hollow or concrete block wall, showing the anchoring means to this type of wall.

Fig. 3 is a view similar to that of Fig. 2, with the exception that it illustrates the anchoring means when the device is used in connection with a solid concrete or brick wall.

Figs. 4 and 5 are sectional views showing the manner in which the sections or units may be overlapped or gripped together.

Fig. 6 is an end view of a modified form of my device.

Similar reference characters represent similar parts throughout the several views.

Now referring to the drawing "A" represents a sectional unit; and which is of course complete within itself provided it is of suitable length for the wall in connection with which it is to be used, consisting of a single sheet of suitable strength metal, a portion of which forms, said unit an upper plate surface 2 in which are suitably located openings 3 to provide an anchoring means which hereinafter will be more fully described. The purpose of this plate surface 2 is to permit my device to securely rest on the wall "W" and act as a support for the angular receptacles 4 which form the outer sides of said device and are an angular continuation of the sheet metal material forming the plate surface 2 and located below the surface of said plate and having a face 5 at an angle of approximately 45 degrees to said plate and an inwardly and upturned face 6 at an acute angle to the face 5.

In the installment of my device in buildings it has been determined that the same is more readily installed in sections and, to permit a complete overlapping of the various sections to prevent destructive elements reaching the effectual contents of my device hereinafter described. One end of the plate surface 2 and faces 5 and 6 are depressed at 7 as shown in Fig. 4 or in lieu thereof said sections may be gripped together as shown in Fig. 5 at 8.

As shown in Fig. 2 this device is adaptable to hollow walls and to be anchored thereto through the use of a standard anchoring bolt 9 which extends perpendicularly through said wall, the lower end being anchored or embedded in the concrete wall or footing, the upper end which is threaded extending through an opening 3 in the plate 2 and through the sill 10, which rests directly upon the plate 2 and securing said sill 10 and unit "A" to the wall through the use of a nut 11 or other locking means.

In the case of solid walls, anchoring of the unit "A" may be accomplished in the same manner or by the protruding of the cement through the openings 3, as shown at 17 in Fig. 3.

Each receptacle is adapted to receive and is provided with a suitable wick or absorbent material 15 which is impregnated with obnoxious or repelling oils or oil solutions, which if desired may contain poison; it being a well established fact that vermin, especially the kind described, will not contact certain obnoxious or repelling oils or oil solutions, said wick or absorbent material being protected from destructive elements by the sloping face 5 which acts as a shed or shield for the same.

There are times when it might be desirable to use a modified form of receptacle as shown in Fig. 6 in which the face 16 corresponds to the face 5 but in place of face 6 there is provided a horizontal bottom portion 12 and an inside face 13 which is upturned at right angle to said bottom portion 12.

I believe that the foregoing describes the advantages and features of my device; however should I desire to make changes which may be covered by the allowed claims I desire this privilege.

What I claim:—

1. In a device for the trapping and exterminating of vermin to be used in connection with building construction, having in combination, a unit having a flat plate, sides extending downward and outward at an angle and upturned inwardly at the base of said sides, at an acute angle thereto, said side member providing an angular portion forming a receptacle adapted to receive and having therein a material suitably impregnated to insure the purpose of said device, and anchoring means for securing said device to the building wall when said receptacle is disposed along the side of the building wall.

2. In a vermin trapping and exterminating device, consisting of a plate having lateral portions, these portions having ends bent inward, to form a receptacle adapted to hold an impregnated wick.

PHILLIP W. DAVIS.