June 15, 1943. S. SCHNELL 2,322,063

BOOSTER-ASSISTED FLUID PRESSURE COMPOUNDING SYSTEMS

Filed March 28, 1942 2 Sheets-Sheet 1

FIG. 1.

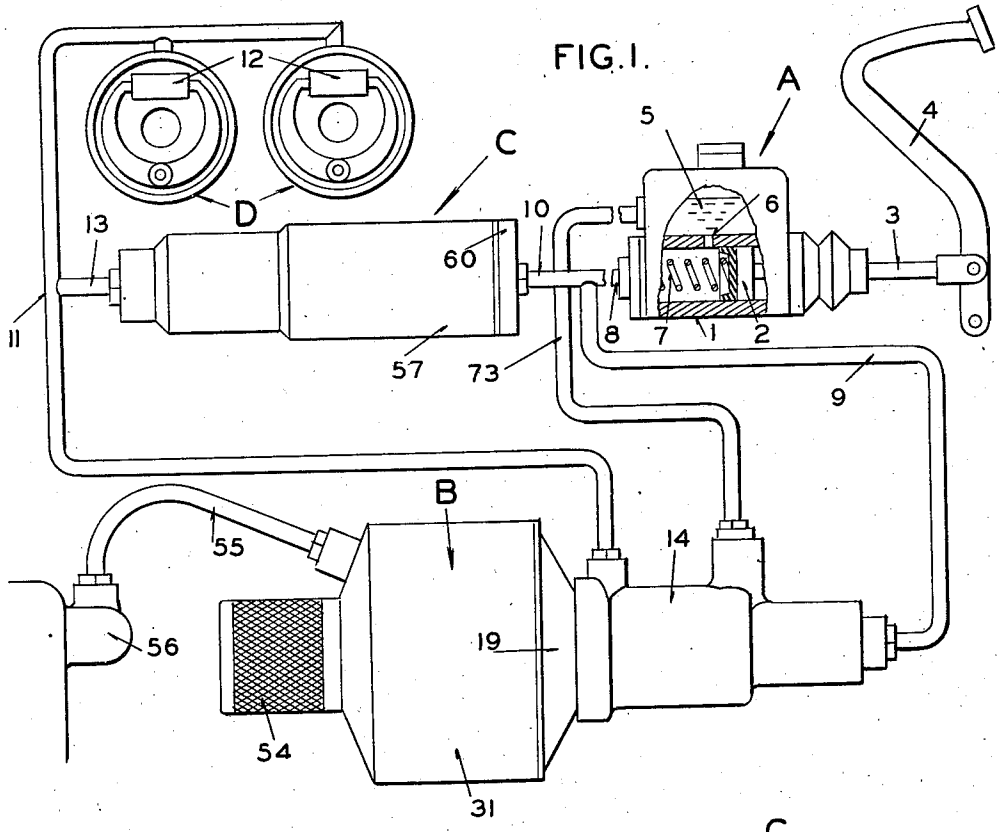

FIG. 3.

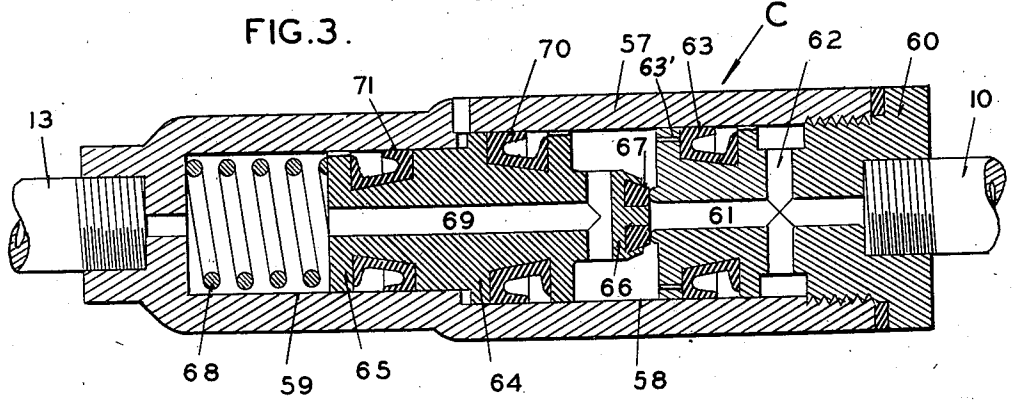

INVENTOR
STEVE SCHNELL

BY

ATTORNEY

June 15, 1943. S. SCHNELL 2,322,063

BOOSTER-ASSISTED FLUID PRESSURE COMPOUNDING SYSTEMS

Filed March 28, 1942 2 Sheets-Sheet 2

FIG. 2.

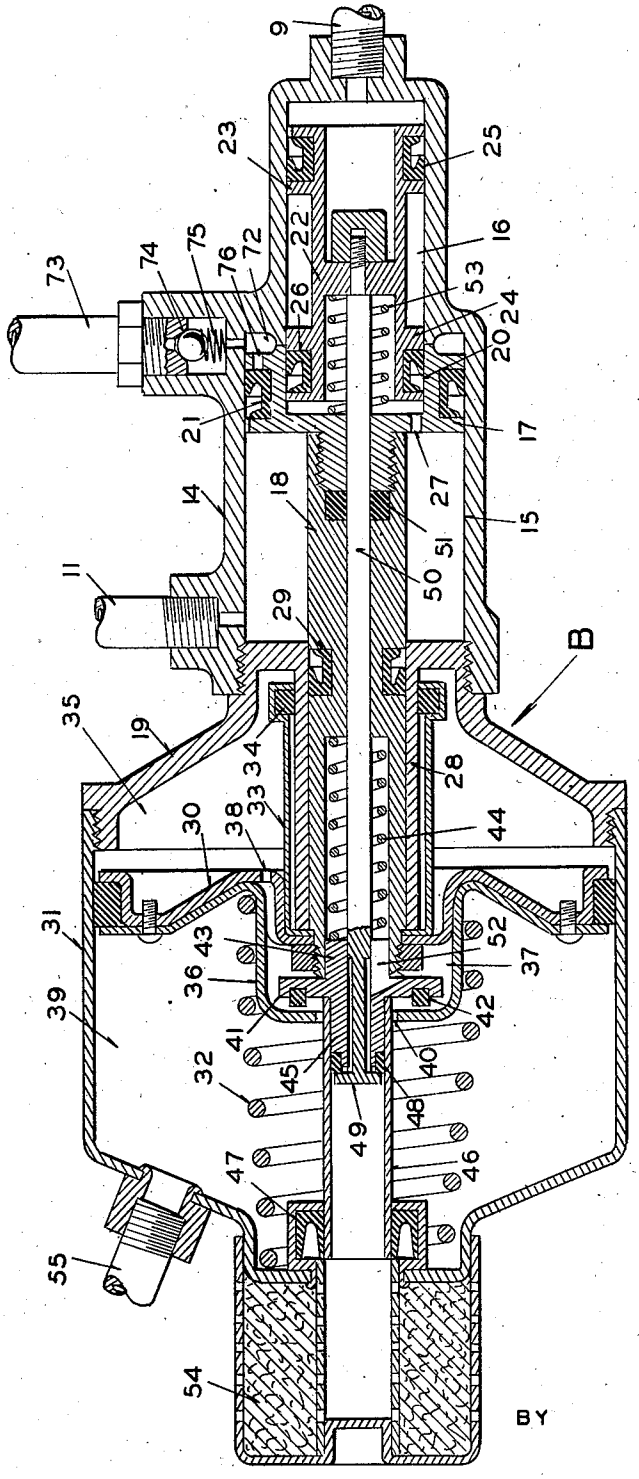

BY

INVENTOR
STEVE SCHNELL

ATTORNEY

Patented June 15, 1943 2,322,063

UNITED STATES PATENT OFFICE

2,322,063

BOOSTER-ASSISTED FLUID PRESSURE COMPOUNDING SYSTEMS

Steve Schnell, Kirkwood, Mo., assignor to Wagner Electric Corporation, St. Louis, Mo., a corporation of Delaware

Application March 28, 1942, Serial No. 436,634

18 Claims. (Cl. 60—54.5)

My invention relates to fluid pressure actuating systems and more particularly to a system embodying improved means whereby a large volume of fluid can be displaced during the initial increments of movement of an actuated member and a smaller volume of fluid can be displaced during later increments of movement of said member.

One of the objects of my invention is to provide power-operated means for assisting in the displacement of the large volume of fluid in a fluid pressure actuating system and thereby relieving the operator of some manual effort.

Another object of my invention is to so construct said large volume fluid displacing means and associate therewith the power-operated assisting means that said power means and the large volume fluid displacing means will automatically become inoperative when a predetermined fluid pressure is reached and subsequently assume their normally inoperative conditions without the necessity of a release of the fluid pressure below said predetermined value.

Other objects of my invention are to produce an efficient low cost fluid pressure compounding system embodying means having a power-operated member for assisting in the displacement of a large volume of fluid and particularly such means that it can be associated with the present standard parts of a fluid pressure actuating system.

Other objects of my invention will become apparent from the following description taken in connection with the accompanying drawings in which Figure 1 is a schematic view of a fluid pressure actuating system embodying my invention; Figure 2 is a sectional view showing details of the power-operated means; and Figure 3 is a sectional view of the pressure-operated control valve means.

Referring to the drawings in detail and first to Figure 1, my improved fluid pressure actuating system comprises, as essential parts, a master cylinder device A, a power-operated device B for displacing a large volume of fluid, and a pressure-operated control valve means C, said system being shown as employed for actuating brakes D although other devices may be actuated if desired.

The master cylinder A is of standard construction and comprises a cylinder 1 having reciprocable therein a piston 2, said piston being actuated by a piston rod 3 and pedal 4. Above the cylinder is a reservoir 5 which is in free two-way communication with cylinder 1 by means of a compensating port 6 only when the piston is in its retracted position where it is returned by a spring 7.

A conduit 8 leads from the outlet of the master cylinder to branch conduits 9 and 10, the former leading to the power-operated device B and the latter leading to the pressure-operated control valve means C. A conduit 11 connects the power-operated device B with the fluid motors 12 for actuating the brakes D. Another conduit 13 places the pressure-operated valve means C in communication with the fluid motors.

Referring to Figure 2, the power-operated fluid pressure displacing means will now be described. This device comprises a casing member 14 provided with a large bore 15 and a smaller bore 16, bore 16 being connected to conduit 9 leading from the master cylinder and the large bore 15 being connected to conduit 11 leading to the fluid motors of the brakes. Within the large bore 15 is a piston 17 to which is attached a forwardly extending hollow piston rod 18 having bearing in a member 19 threaded into the end of the large bore and acting as an end wall thereof. The piston 17 is of annular construction in order to provide a bore 20 which is of the same diameter as the small bore 16, said bore 20 forming a continuation of bore 16 when the piston is in its normally inoperative position as shown in Figure 2. A packing cup 21 is carried by the piston 17 for sealing it against passage of fluid when the piston is moved forwardly, said packing cup, however, not preventing fluid from flowing in the opposite direction. In bores 16 and 20 there is mounted a double-headed piston 22, head 23 thereof being positioned in bore 16 and head 24 being positioned in bore 20. Sealing cups 25 and 26 are associated with heads 23 and 24. The bore 20 communicates with bore 15 ahead of piston 17 by way of a passage 27.

The piston rod 18 for piston 17 is guided by a guide sleeve 28 integral with member 19 and associated with the piston rod is a packing cup 29 to prevent any leakage of fluid from bore 15. The outer end of the piston rod is connected to a piston 30 which is adapted to reciprocate in a cylinder 31 mounted on member 19. The piston and cylinder form a vacuum fluid motor which is the power device employed for actuating piston 17. A spring 32 acts on piston 30 and normally biases said piston to its inoperative position, as shown in Figure 2, which inoperaitve position will correspond to the inoperative posi-

tion of piston 17 as determined by its abutment with the end of large bore 15. The piston 30 carries a sleeve 33 which surrounds the guide sleeve 29 and a packing 34 is associated with the sleeves in order to make the compartment 35 between the piston and member 19 fluid-tight.

The piston 30 carries a cup-shaped member 36 providing a valve compartment 37, said compartment being in communication with compartment 35 at the rear of piston 30 by an opening 38 through the wall of the piston. The compartment also communicates with a compartment 39 ahead of the piston by way of a central opening 40 in the wall of member 36. Positioned within the valve compartment is a valve element 41 having a sealing ring 42 for engaging the wall of member 36 which surrounds opening 40 to thus prevent communication between compartments 37 and 39. One side of the valve member 41 carries an annular projection 43 which slidably fits into the end of the hollow piston rod 18, said end being enlarged to receive a coil spring 44 for biasing the wave element 41 toward a seated position. The other side of the valve element also carries an annular projection 45 and secured thereto is a tubular element 46 which extends forwardly through the forward end wall of cylinder 31. Packing means 47 seals this tube with the end wall of the cylinder. The end of the projection 45 is provided with a sealing ring 48 with which cooperates a valve element 49 formed as a head on the rod 50 which extends completely through the hollow piston rod 18. The rear end of this rod is secured to the double-headed piston 22. Packing 51 seals the rod. The end of rod 50 adjacent the valve element 49 is fluted in order that air may flow along the rod and through a slot 52 in the valve element 41 when the valve element 49 is unseated. It is thus seen that compartment 37 can be placed in communication with tube 46 which communicates with the atmosphere. Valve element 49 is normally held seated by a spring 53 interposed between the double-headed piston 22 and piston 17. This spring also holds element 41 unseated against the bias of spring 43 when piston 17 in the large bore and piston 30 are in their retracted positions. It is to be noted that when piston 17 abuts the end of its bore, piston 22 is still some distance from the end of bore 16 and, therefore, spring 53 is free to expand and pull rod 50 rearwardly.

The end of cylinder 31 through which tube 46 extends has associated therewith an air cleaner 54 for cleaning the air before it passes into tube 46. The end wall of the cylinder also has attached thereto a tube 55 which is connected to a suitable vacuum supply such as the manifold 56 (see Figure 1) of the engine of the vehicle. The compartment 39 in cylinder 31 ahead of piston 30 is thus in constant communication with this source of vacuum. When the valve element 41 is unseated, compartment 35 at the rear of piston 30 will also be in communication with the source of suction.

Referring now to Figure 3, the pressure-operated control valve means C will be described in detail. The valve means is enclosed within a casing 57 provided with communicating bores 58 and 59, the former being slightly larger than the latter. The end of the large bore is closed by a plug 60, which also serves as a connecting fitting for branch conduit 10 leading from the master cylinder. The end of the smaller bore is connected with conduit 13 leading to the fluid motors of the brakes. The plug 60 has a central passage 61 and a cross-passage 62. A packing element 63 is carried by the fitting between the cross-passage 62 and its inner end in order to prevent fluid from flowing from said cross-passage to bore 59 and between the periphery of the fitting and the wall of the bore. The packing cup, however, is so constructed as to collapse and permit fluid under pressure to flow from the bore to the cross-passage 62.

Within bores 58 and 59 are pistons 64 and 65, respectively, formed integrally with each other. Piston 64 is provided with a projecting portion 66 which carries a valve element 67 for engagement with the wall at the end of passage 61 of fitting 60. A spring 68 of predetermined strength is interposed between the small piston and the end of bore 59 in order to bias the valve element 67 seated and thereby close passage 60. A passage 69 extends through the pistons so that when the valve element 67 is unseated, fluid can flow from conduit 10 to conduit 13 through the valve mechanism. Pistons 64 and 65 carry suitable sealing elements 70 and 71. The pistons are capable of having only slight movement in their bores, which movement is sufficient to permit the unseating of the valve element 67 against the predetermined force exerted by spring 68. The amount of movement of the pistons is determined by the distance between piston 64 and the end of bore 58 when the valve element 67 is seated.

Since piston 17 in device B will move forwardly and increase the volume of chamber 72 at the rear thereof, provision must be made to keep this chamber continuously filled with liquid. This is accomplished by providing a conduit 73 for connecting reservoir 5 of the master cylinder device "A" with chamber 72. Associated with this conduit is a check valve 74 biased to closed position by a spring 75. This check valve prevents fluid from flowing from chamber 72 to the reservoir but will not prevent flow in the opposite direction in order to keep the chamber filled. In order to assist flow of fluid from chamber 72 past piston 17 and packing cup 21 as the piston is retracted, holes 76 are provided in the wall of the piston.

Referring now to the operation of the fluid pressure actuating system, all the parts thereof will be in the positions shown in the various figures when the system is inoperative. The valve element 67 in the pressure-operated control valve means C will be closed by the action of spring 68. Pistons 17, 22, and 30 will be in their rearmost positions as shown in Figure 2 and spring 53 will be effective to maintain the valve element 49 seated and valve element 41 unseated. Under these conditions compartments 39 and 35 on opposite sides of piston 30 will both be in communication with the source of suction and due to this, there will be no force acting to move piston 30.

When it is desired to apply the brakes, the master cylinder A will be operated by actuating pedal 4. As soon as the compensating port 6 is closed, pressure will be developed by piston 2 and this pressure will be effective on piston head 25 of piston 22. No fluid can flow directly through the valve means C since passage 61 is closed. As soon as sufficient pressure is developed to cause movement of piston 22 and compress spring 53, rod 50 will be pushed forwardly. As this rod moves forwardly, spring 44 will be effective to move valve element 41 therewith and cause seating thereof, thus closing off communication be-

tween compartments 39 and 35 on opposite sides of piston 30. Continued movement of piston rod 50 will now cause valve element 49 on the end thereof to be unseated, thereby permitting air under atmospheric pressure to enter the valve compartment 37 and compartment 35 at the rear of piston 30. This will now cause a differential fluid pressure to act on piston 30, thereby moving it to the left as viewed in Figure 2. As piston 30 moves, it will carry piston 17 with it, thereby compressing the liquid in bore 15 ahead of the piston and force it out through conduit 11 into the fluid motors 12 of the brakes. As pressure continues to be developed by the master cylinder, piston 22 will move along with piston 17 and thus continue to maintain the valve element 49 open. The pressure necessary to keep the valve open will be that necessary to move piston 22 against the light force of spring 53 and the fluid pressure which is being developed by piston 17 since head 24 of piston 22 is subjected to the pressure in bore 15 due to opening 27 through piston 17.

The volume of fluid being moved by piston 17, however, will be larger than the volume of fluid being displaced by the master cylinder since the area of piston 17 is larger than the area of piston head 23 being acted upon by the fluid pressure developed by the master cylinder. If piston 17 should be twice as large as the heads of the double-headed piston 22, the volume being displaced by piston 17 will be twice that being displaced by the master cylinder. However, the pressure necessary to obtain this displacement will only be that necessary to move piston 22 against the action of spring 53 and the fluid pressure acting on piston head 24. The work necessary to move piston 17 will be done by the vacuum motor. If the head of piston 17 is twice as large in area as the piston heads 23 and 24, as assumed, then the work necessary to accomplish the displacement of a large volume of fluid by piston 17 will be equally divided between the vacuum motor and the master cylinder since each causes the movement of a piston, the areas of which being effective in acting on the fluid displaced are equal due to the arrangement including passage 27.

If the depressing movement of the pedal should be discontinued, then the vacuum motor will also discontinue its operation. This is caused by the "follow-up" type of valve means controlling the suction motor. As soon as rod 50 ceases to move, piston 30 will continue to move only enough to seat valve element 49, thus resulting in the pressures in compartments 39 and 35 bearing such relation to each other that there will be a differential force just sufficient to hold pistons 30 and 17 against any return movement by the fluid pressure already developed in bore 15. As piston 17 moves forwardly, fluid will constantly enter the expanding chamber 72 from reservoir 5 and maintain it filled.

When the fluid pressure developed by the pistons 17 and 18 reaches a predetermined value it will cause valve element 67 of valve means C to be unseated and maintained unseated against spring 68.

The unseating of the valve element 67 is brought about by the action of fluid pressure on the larger area of piston 64, it being noted that this same pressure also acts on the small area of piston 64 due to through passage 69. When the force acting to move piston 64 to the left becomes greater than the force holding the valve 67 seated (spring force plus force from fluid action on small area) the unseating will take place.

With valve element 67 unseated fluid will be capable of flowing directly from the master cylinder to the fluid motors 12 of the brakes. When this condition occurs, spring 53 can no longer be compressed since the piston heads 23 and 24 at the opposite ends of piston 22 will both be in communication with the master cylinder and, therefore, subject to the same pressure. Spring 53 will now expand and the relative positions of pistons 17 and 22 will be as shown in Figure 2. This will cause the valve element 49 to become seated and the valve element 41 to become unseated. Both compartments 35 and 39 on opposite sides of piston 30 will now be subject to the same sub-atmospheric pressure and there will be no force tending to move piston 30 except that of spring 32. This spring 32, which is fairly strong, will now cause piston 30 to be moved rearwardly and will push piston 17 also rearwardly. Piston 17 will not be prevented from moving rearwardly by the fluid in compartment 72 at the rear thereof since this fluid can be forced past the packing cup 21 by the action of spring 32 and into the portion of the bore ahead of the piston. Pistons 17 and 22 and the vacuum motor piston 30 and the valve elements will finally assume the positions shown in Figure 2 where they will be ready for subsequent operation. The return of these pistons to their normally inoperative positions will not have any effect whatsoever on the continued application of the higher fluid pressures in the fluid motors of the brakes by a continued protractile movement of the master cylinder piston. The work necessary to apply the brakes will all be done now by the master cylinder.

If it is desired to release the brakes, the brake pedal is released and the fluid from the fluid motors of the brakes will return to the master cylinder through the valve means C. Fluid under pressure can pass the valve element 67 notwithstanding that it may be closed as return flow is permitted by the passage 63' the collapse of the packing cup 63 and the cross-passage 62.

If, during the retractile movement of the piston of the master cylinder, it is desired to re-apply the brakes, the power-operated fluid pressure displacing means B will come into operation only when the fluid under pressure in the system is permitted to drop below the predetermined value at which the valve means C is opened. If the pressure is below this predetermined value, then the suction motor will become operative until the pressure exerted by the master cylinder piston is again the predetermined value at which time the valve 67 will be opened. The vacuum motor will again become inoperative and pistons 17 and 22 automatically returned to their inoperative positions in the manner already described.

It is thus seen from the described fluid pressure actuating system that there is provided means for displacing a large volume of fluid during the initial movement of the piston of a master cylinder. The displacing of this large volume of fluid does not result in any additional effort on the operator since the vacuum motor does the work necessary to move the extra volume as determined by the difference between the areas of the pistons 22 and 17. After the large body of fluid has been displaced, the master cylinder is automatically directly connected to the fluid motors of the brakes and the system acts as though the large volume displacing device were not incorporated

in the system. All the parts of said device automatically return to their normally inoperative positions and without the necessity of any release of fluid under pressure by release of the master cylinder piston. Because of the large volume displacing device being incorporated in the system, the size of the master cylinder piston may be reduced since it is not necessary for it to displace a large volume of fluid in order to get the brake shoes initially applied and the slack taken up in the system. With a smaller master cylinder piston, higher fluid pressures can be developed with the same pedal ratio since a considerable amount of the pedal travel will be saved due to the fact that it is not required in displacing fluid to take up slack in the braking system. It is also to be noted that in the use of the power-operated large volume fluid displacing device there will be no noticeable effect on the operator's foot at the time that the displacing device becomes inoperative and valve 67 is opened to directly connect the master cylinder with the fluid motors of the brakes. When the power-operated device is being operated, the fluid pressure in the fluid motors of the brakes will be substantially the same (slightly lower) as that being developed by the master cylinder. It is also to be noted in the system disclosed that there is no necessity for a specially designed master cylinder as the power-operated large volume displacing device B and the valve means C may be interposed in the fluid pressure lines wherever it is convenient. Of course, the device B and valve C may be specially designed into the master cylinder to make a single unit if such is desired. It is very easy to install the units in any existing braking system and the cost thereof will be low since it will not be necessary to replace the master cylinder already being employed in the braking system.

Being aware of the possibility of modifications in the particular structure herein described without departing from the fundamental principles of my invention, I do not intend that its scope be limited except as set forth by the appended claims.

Having fully described my invention, what I claim as new and desire to secure by Letters Patent of the United States is:

1. In a fluid pressure actuating system, a fluid motor for actuating a device, a master cylinder device connected to the fluid motor, a power-actuated fluid pressure displacing device connected to the fluid motor and having a source of power independent of the master cylinder device, means for preventing the fluid under pressure developed by the master cylinder from being transferred to the motor until a predetermined fluid pressure is attained in the fluid motor, and means for controlling the operation of the power-actuated device by fluid pressure from the master cylinder prior to said master cylinder being connected to the motor.

2. In a fluid pressure actuating system, a fluid motor for actuating a device, a master cylinder device connected to the fluid motor, means for preventing the fluid pressure developed by the master cylinder from being transferred to the motor until after a predetermined pressure is reached, means comprising a power-actuated fluid displacing device having a source of power independent of the master cylinder device and controlled by the fluid pressure developed by the master cylinder prior to said predetermined pressure for placing fluid under pressure in the fluid motor, and means for causing the power-actuated fluid pressure displacing device to become inoperative whenever the pressure developed by the master cylinder device is above the predetermined pressure.

3. In a fluid pressure actuating system, a fluid motor for actuating a device, a master cylinder device, conduit means for placing the master cylinder device in communication with the fluid motor, valve means associated with the conduit for preventing said communication until a predetermined pressure is developed by the master cylinder device, a fluid displacing device connected to communicate with the motor and including a movable member, power means independent of the master cylinder device for operating the movable member, and means controlled by the fluid pressure developed by the master cylinder when said pressure is below the predetermined value for causing said power device to be operable.

4. In a fluid pressure actuating system, a fluid motor for actuating a device, a master cylinder device, conduit means for placing the master cylinder device in communication with the fluid motor, valve means associated with the conduit for preventing said communication until a predetermined pressure is developed in the fluid motor, a fluid displacing device connected to communicate with the motor and including a movable member, a second fluid displacing device also connected with the motor and including a movable member, power means having a source of power independent of the master cylinder device for operating the movable member of the first fluid displacing device, and means controlled by the fluid pressure developed by the master cylinder when said pressure is below the predetermined value for causing said power device to be operable and also the movable member of the second fluid displacing device to be moved to displace fluid.

5. In a fluid pressure actuating system, a fluid motor for actuating a device, a cylinder connected to communicate with the motor, a piston in said cylinder, a source of power and power-operated means for actuating the piston, control means for the power means, a source of fluid pressure, means for operating the control means by pressure from the source, and means for placing the source in direct communication with the motor when the pressure in the motor reaches a predetermined value to thereby operate the fluid motor independently of the power means and its source of power.

6. In a fluid pressure actuating system, a fluid motor for actuating a device, a cylinder connected to communicate with the motor, a piston in said cylinder, a source of power and power-operated means for actuating the piston, control means for the power means, a source of fluid pressure, means for operating the control means by pressure from the source, means for placing the source in direct communication with the motor when the fluid pressure in the motor reaches a predetermined value to thereby operate the fluid motor independently of the power means and its source of power, and means for causing said power means to be inoperative and the piston to return to its normally inoperative position after said direct communication is established.

7. In a fluid pressure actuating system, a fluid motor for actuating a device, means comprising two movable members for developing fluid pressure to actuate the motor, a source of power and power operated means for actuating one of the members, means for controlling the operation of

the power means by the movement of the other member so that said members will have substantially simultaneous movement, a source of fluid pressure, means for moving said other member by pressure from the source, and means for placing the source in direct communication with the fluid motor when a predetermined fluid pressure is effective in the fluid motor to thereby operate the motor independently of the power means and its source.

8. In a fluid pressure actuating system, a fluid motor for actuating a device, means comprising two movable pistons for developing fluid pressure to actuate the motor, a source of power and power operated means for actuating one of the pistons, means for controlling the power means by the movement of the other piston so that said pistons will have substantially simultaneous movement, a source of fluid pressure independently of the source of power for the power means, means for moving said other piston by pressure from the source, and comprising a fluid motor connected to the source and having a piston the same diameter as said other piston, and means for placing the source in direct communication with the fluid motor when a predetermined fluid pressure is effective in the fluid motor.

9. In a fluid pressure actuating system, a fluid motor for actuating a device, means comprising two movable members for developing fluid pressure to actuate the motor, power means for actuating one of the members, means for controlling the power means by the movement of the other member so that said members will have substantially simultaneous movement, a master cylinder device, means for moving said other member by pressure developed by the master cylinder device, means for placing the master cylinder device in direct communication with the fluid motor only when the pressure being developed by the master cylinder device is above a predetermined value, and means for causing the power means to be inoperative when the pressure developed by the master cylinder device is above the predetermined value.

10. In a fluid pressure actuating system, a fluid motor for actuating a device, a fluid pressure developing chamber connected to the motor, two movable members acting on the fluid in the chamber, power means for moving one member, control means for the power means, means for controlling the control means by the movement of the other movable member so that the power means moves the first movable member substantially simultaneously with said other movable member, a source of fluid pressure independently of the source of power for the power means, means for moving said other movable member by pressure from the source, means for connecting the source to the motor when the pressure from the source is above a predetermined value, and means for preventing the power means from functioning when the source is connected to the motor.

11. In a fluid pressure actuating system, a fluid motor for actuating a device, a fluid pressure developing chamber connected to the motor, two movable members acting on the fluid in the chamber, a suction motor for moving one member, a follow-up valve mechanism for controlling the suction motor, means for controlling the valve mechanism by the movement of the other movable member so that the suction motor moves the first movable member substantially simultaneously with said other movable member, a source of fluid pressure, means for moving said other movable member by pressure from the source, and means for connecting the source to the motor when the pressure from the source is above a predetermined value.

12. In a fluid pressure actuating system, a fluid motor for actuating a device, a fluid pressure developing chamber connected to the motor, two movable members acting on the fluid in the chamber, a suction motor for moving one member, a follow-up valve mechanism for controlling the suction motor, means for controlling the valve mechanism by the movement of the other movable member so that the suction motor moves the first movable member substantially simultaneously with said other movable member, a source of fluid pressure, means for moving said other movable member by pressure from the source, means for connecting the source to the motor when the pressure in the motor is above a predetermined value, and means for returning the movable members to their normally inoperative positions after said predetermined pressure is reached and during continued application of fluid pressure from the source to the motor.

13. In a fluid pressure actuating system, a fluid motor for actuating a device, a chamber connected to the fluid motor, first and second pistons for placing fluid in the chamber under pressure, a suction motor for moving the first piston, a follow-up valve mechanism for controlling the suction motor, means for controlling the valve mechanism by movement of the second piston, a master cylinder device, means for moving the second piston and comprising a third piston subject to the fluid pressure developed by the master cylinder device, said second and third pistons being of equal diameters, and means for placing the master cylinder device in communication with the motor when the pressure developed thereby is a predetermined value.

14. In a fluid pressure actuating system, a fluid motor for actuating a device, a cylinder in communication with said motor, a piston movable in said cylinder for displacing fluid under pressure to the fluid motor, means comprising a second piston for acting on the fluid in said cylinder, power means for moving the first piston, control means for the power means, a master cylinder device, means for moving the second piston by fluid pressure developed by the master cylinder device, means for controlling the control means of the power means by the movement of the second piston so that the power means moves the first piston substantially simultaneously with the second piston, means for directly placing the master cylinder device in communication with the motor when the pressure in the fluid motor is greater than a predetermined value, a reservoir, means for establishing a chamber at the rear of the first piston, means for connecting the reservoir to the chamber so as to maintain said chamber filled as the piston moves forwardly, and means for preventing fluid from said cylinder to return to the reservoir.

15. In a fluid pressure actuating system, a fluid motor for actuating a device, a cylinder in communication with said motor, a piston movable in said cylinder for displacing fluid under pressure to the fluid motor, means comprising a second piston for actuating on the fluid in said cylinder, power means for moving the first piston, control means for the power means, a master cylinder device, means for moving the second piston by fluid pressure developed by the master cylinder

device, means for controlling the control means of the power means by the movement of the second piston so that the power means moves the first piston substantially simultaneously with the second piston, means for directly placing the master cylinder device in communication with the motor when the pressure in the fluid motor is greater than a predetermined value, a reservoir, means for establishing a chamber at the rear of the first piston, means for connecting the reservoir to the chamber so as to maintain said chamber filled as the piston moves forwardly, means for preventing fluid from said cylinder to return to the reservoir, means for permitting fluid to flow from the chamber to the cylinder ahead of the piston but not in the opposite direction, and spring means for returning the first piston to its normally inoperative position when the master cylinder is in direct communication with the motor.

16. In a fluid pressure actuating system, a fluid motor for actuating a device, a master cylinder device, conduit means for placing the master cylinder device in communication with the fluid motor, valve means associated with the conduit for preventing said communication until a predetermined pressure is developed by the master cylinder device, a cylinder connected with the motor, a piston in said cylinder for displacing fluid and provided with a bore in communication with the cylinder, a second piston in the bore, a fluid motor connected to move the first piston, a follow-up valve mechanism for controlling the operation of the last named fluid motor, means for operating the follow-up valve mechanism in accordance with the movement of the second piston, and means for moving the second piston by the fluid pressure developed by the master cylinder when said pressure is below the predetermined value.

17. In a fluid pressure actuating system, a fluid motor for actuating a device, a master cylinder device, conduit means for placing the master cylinder device in communication with the fluid motor, valve means associated with the conduit for preventing said communication until a predetermined pressure is developed by the master cylinder device, a cylinder connected with the motor, a piston in said cylinder for displacing fluid and provided with a bore in communication with the cylinder, a second piston in the bore, a fluid motor connected to move the first piston, a follow-up valve mechanism for controlling the operation of the latest named fluid motor, means for operating the follow-up valve mechanism in accordance with the movement of the second piston, means for moving the second piston by the fluid pressure developed by the master cylinder when said pressure is below the predetermined value, means for establishing a chamber at the rear of the first piston, a reservoir connected to said chamber, a check valve between the reservoir and chamber, means for permitting fluid to flow from the chamber past the first piston to the cylinder ahead thereof but not in the opposite direction, and a spring acting on the first piston tending to return it to its normally retracted position.

18. In a fluid pressure actuating system, a fluid motor for actuating a device, a master cylinder device, conduit means for placing the master cylinder device in communication with the fluid motor, valve means associated with the conduit for preventing said communication until a predetermined pressure is developed by the master cylinder device, a cylinder connected with the motor, a piston in said cylinder for displacing fluid and provided with a bore in communication with the cylinder, a second piston in the bore, a fluid motor connected to move the first piston, a follow-up valve mechanism for controlling the operation of the last named fluid motor, means for so controlling the follow-up valve mechanism by the movement of the second piston that the first piston will be moved by the fluid motor substantially simultaneously with said second piston, and means for moving the second piston by the fluid pressure developed by the master cylinder when said pressure is below the predetermined value, said last named means comprising a fluid motor connected to the master cylinder and having a piston the diameter of which is the same as the diameter of the second piston.

STEVE SCHNELL.