(12) INTERNATIONAL APPLICATION PUBLISHED UNDER THE PATENT COOPERATION TREATY (PCT)

(19) World Intellectual Property Organization
International Bureau

(43) International Publication Date
28 March 2019 (28.03.2019)

WIPO | PCT

(10) International Publication Number
WO 2019/058375 A1

(51) International Patent Classification:
A61L 26/00 (2006.01) *A61L 15/40* (2006.01)

(21) International Application Number:
PCT/IL2018/051051

(22) International Filing Date:
17 September 2018 (17.09.2018)

(25) Filing Language: English

(26) Publication Language: English

(30) Priority Data:
254636 24 September 2017 (24.09.2017) IL

(71) Applicant: **REDDRESS LTD.** [IL/IL]; 2 Shkedim Street, 3701130 Pardes Hana (IL).

(72) Inventors: **KUSHNIR, Alon**; 6 Haarava St., 3780800 Givat Ada (IL). **KUSHNIR, Igal**; 11 Shkedim Street, 3701142 Pardes Hana (IL).

(74) Agent: **MORAG-SELA, Tamar**; Reinhold Cohn and Partners, P.O.B.13239, 61131 Tel Aviv (IL).

(81) Designated States *(unless otherwise indicated, for every kind of national protection available)*: AE, AG, AL, AM, AO, AT, AU, AZ, BA, BB, BG, BH, BN, BR, BW, BY, BZ, CA, CH, CL, CN, CO, CR, CU, CZ, DE, DJ, DK, DM, DO, DZ, EC, EE, EG, ES, FI, GB, GD, GE, GH, GM, GT, HN, HR, HU, ID, IL, IN, IR, IS, JO, JP, KE, KG, KH, KN, KP, KR, KW, KZ, LA, LC, LK, LR, LS, LU, LY, MA, MD, ME, MG, MK, MN, MW, MX, MY, MZ, NA, NG, NI, NO, NZ, OM, PA, PE, PG, PH, PL, PT, QA, RO, RS, RU, RW, SA, SC, SD, SE, SG, SK, SL, SM, ST, SV, SY, TH, TJ, TM, TN, TR, TT, TZ, UA, UG, US, UZ, VC, VN, ZA, ZM, ZW.

(84) Designated States *(unless otherwise indicated, for every kind of regional protection available)*: ARIPO (BW, GH, GM, KE, LR, LS, MW, MZ, NA, RW, SD, SL, ST, SZ, TZ, UG, ZM, ZW), Eurasian (AM, AZ, BY, KG, KZ, RU, TJ, TM), European (AL, AT, BE, BG, CH, CY, CZ, DE, DK, EE, ES, FI, FR, GB, GR, HR, HU, IE, IS, IT, LT, LU, LV, MC, MK, MT, NL, NO, PL, PT, RO, RS, SE, SI, SK, SM, TR), OAPI (BF, BJ, CF, CG, CI, CM, GA, GN, GQ, GW, KM, ML, MR, NE, SN, TD, TG).

Declarations under Rule 4.17:
— *of inventorship (Rule 4.17(iv))*

Published:
— *with international search report (Art. 21(3))*

(54) Title: ASSEMBLY AND METHOD FOR THE PREPARATION OF A WOUND DRESSING

(57) Abstract: The present disclosure provides a wound dressing assembly comprising (i) a blood-clotting mold device having an enclosure defined between walls of a main body and a removable closure over an opening and is configured for introduction of blood thereinto, and (ii) a coagulation initiator in an amount sufficient to coagulate blood introduced into the enclosure to form a blood clot, wherein the formed blood clot is transferable onto a wound. Also provided by the present disclosure is a method for preparing a wound dressing by introducing a volume of blood into the enclosure of the blood-clotting mold device, maintaining the blood within the enclosure for a time sufficient to permit clotting of the blood to thereby obtain a blood clot; removing said closure to open the enclosure; and extracting the blood clot from the enclosure. The blood clot thus formed may be used in a method for dressing a wound by fixation of the clot onto the wound, which method also forms part of the present disclosure.

WO 2019/058375 A1

ASSEMBLY AND METHOD FOR THE PREPARATION OF A WOUND DRESSING

TECHNOLOGICAL FIELD

This disclosure is in the field of wound treatment and concerns a wound dressing assembly for the preparation of a blood clot and use of this blood clot in wound treatment.

BACKGROUND

Chronic wounds and skin ulcers are a serious medical condition and effective wound treatment approaches is a recognized medical need.

US 9,180,142 discloses a wound treatment procedure by which blood is coagulated and the so-formed blood clot is applied onto a wound with a dressing material.

GENERAL DESCRIPTION

The present disclosure concerns wound treatment through the use of a blood clot. Specifically provided by this disclosure is a wound dressing assembly (e.g. in the form of a kit-of-parts for use in the currently disclosed wound treatment) for preparing such a blood clot, a method for preparing a wound dressing comprising such a blood clot, and a method for dressing the wound therewith.

The blood clot that is formed and used according to this disclosure is typically, but not exclusively, formed from blood of the same subject whose wound is to be dressed by the teaching of this disclosure. The blood is typically whole blood withdrawn from the subject in any manner acceptable in medical practice for blood withdrawal. In some other embodiments, the blood is whole blood from a blood bank.

By a first of its aspects, the present disclosure provides a wound dressing assembly comprising a blood-clotting mold device having an enclosure, defined between walls of a main body and a removable closure (e.g. in the form of a film) that seals an opening of

the enclosure (to maintain sterility of the enclosure), the enclosure being configured for introduction of blood thereinto, typically without removal of the closure or portion thereof. This device serves, as will be further understood from the description below, as a mold for forming a blood clot that is intended for placing onto a wound.

By one embodiment, at least one of the walls or closure of the device is pierceable by a needle and through the pierce formed therewith, blood is introduced into the sealed enclosure.

By another embodiment, the enclosure has a port for blood introduction; or at times two ports, one for introducing blood and the other for venting (e.g. to permit egress of gas from the enclosure during blood introduction). The venting port may be *a priori* sealed, intended for removal of excess pressure during injection of the blood into the enclosure. Typically, prior to injection of the blood and in order to permit such venting, the vent is opened.

By one other embodiment, the enclosure (prior to introducing the volume of blood) is under vacuum.

In some embodiments, the enclosure comprises a coagulation initiator in an amount sufficient to facilitate coagulation of blood introduced into the enclosure. The coagulation initiator may also be held in an independent container for either mixing with the blood before it is introduced into the enclosure or for independent injection into the enclosure before or after introducing the blood thereinto.

Blood coagulation initiators are known in the art. In one embodiment of the present disclosure, the blood coagulation initiator comprises at least kaolin. The blood coagulation initiator (kaolin or any other coagulation initiator) may be provided in any form, such as, liquid, powder, granulate, etc.

Once the blood clot is formed within the enclosure, it is transferable onto a wound or onto a dressing material.

The assembly preferably comprises a scaffold matrix (blood clot supporting matrix) within the enclosure that is intended for being integrated or embedded with the formed blood clot. The scaffold matrix may, thus, have the purpose of (i) providing an overall support to the blood clot; (ii) assisting in maintaining structural integrity of the

clot once formed, and/or (iii) enabling the transfer of the clot to the wound or onto a dressing and supporting the clot throughout such transfer.

This supporting scaffold matrix is typically in a form of a net, such as a plastic net, a cloth etc. in some embodiments, the matrix is of a material similar to that of a dressing material, e.g. gauze.

The blood injection is, typically, performed such that said matrix will be embedded within the blood and hence within the subsequently formed blood clot

The enclosure has a shape configured for extraction of the formed blood clot without compromising the integrity of the blood clot. For this, the opening of the enclosure that is initially sealed/closed by the closure, should be wide to permit such extraction, e.g. a shape of a relatively shallow cavity.

The mold device may have different shape and sizes to match different shapes and sizes of wounds.

In some embodiment, the enclosure has a shape and dimension that configures the eventual overall shape of the clotted blood mass formed within the enclosure and hence the shape and dimension of the blood clot subsequently applied onto the wound. The shape and dimension of the enclosure (and hence the shape and dimension of the eventual blood clot) may be designed according to the intended use and site of application. For a typical case of application onto a skin wound or ulcer, the enclosure is typically designed with an opening having a width sufficient to permit relatively easy extraction of the clot as whole without compromising its integrity. The clot is typically formed to have a horizontal dimension that is considerably larger than its height (thickness), e.g. in the form of a relatively shallow cavity as noted above. In some other embodiments, e.g. in the case of a tunneling wound, the relative dimension may be different and configured for such types of wounds.

In some embodiments, at least the walls of the main body are rounded (convex or U-shaped). Yet, in some other embodiments, the walls of the main body are polygonal, e.g. cubic shaped.

The enclosure may, by some embodiments, have the general form of a blister and the closure being a film that is removable from the rims of the main body. The enclosure may typically comprise a portion, e.g. all or parts of the main body, which is transparent.

Further, to facilitate transfer of the formed blood clot, without compromising the integrity of the clot, the enclosure is typically made of or is coated with a material of the kind to which a blood clot does not adhere or adheres to only weakly.

Also provided by this disclosure is a method for preparing a wound dressing making use of the blood-clotting mold device disclosed herein. Generally, the method comprises injecting a volume of blood into the enclosure of the of the currently disclosed blood-clotting mold device, permitting the volume of blood to clot to thereby obtain a blood clot within the device's enclosure, removing the closure and extracting the blood clot out of the enclosure.

By some embodiments, contemplated within the method of this disclosure, is a procedure by which a wall of the enclosure or the closure is first pierced to form a vent, e.g. by a sharp object or by a needle (e.g. the same needle subsequently used for injection of the blood) and only then blood is injected into the enclosure.

In some embodiments, after extraction, the blood clot may be combined with a dressing material. Such combination may involve transfer of the blood clot onto the dressing material for subsequent placing of the combined blood-clot and dressing material onto a wound; or placing the blood clot directly onto the wound and covering it with the dressing material. The dressing material may be gauze or any other material suitable or commonly used for dressing wounds.

Also provided by this disclosure is a method for dressing a wound. This method comprises the preparation of a blood clot and its extraction, in the manner described above and then applying the extracted blood clot onto a wound. Prior to or after application of the blood clot onto the wound, the blood clot may be combined with a wound dressing material as described above.

The assembly of this disclosure, which may be in the form of a kit-of-parts (collection of discrete elements), can comprise, in addition to the blood-clotting mold device, other elements for use in the methods disclosed herein.

Without being limited thereto, such other elements may include means for transferring the blood clot that has been formed in said enclosure onto the wound. Accordingly, in some embodiments, the assembly comprises a blood clot removing tool, e.g. a spoon-like or spatula-like instrument. This tool can be made of plastic, metal, wood,

cardboard, silicon, or be made from any other suitable material, and is configured for the removal of the clot from the enclosure preferably in a manner that preserves the clot's structural integrity. In some embodiments, the removing tool is configured also for separating the blood clot from the wall of the enclosure.

In some embodiments, the assembly comprises means for securing the formed blood clot to the wound. Such means may be a dressing material, e.g. gauze or any other material that is or may be used in medical practice for dressing wounds.

In addition, or alternatively, the assembly may include elements such as those used for blood withdrawal, a blood collection vial, a blood coagulant to prevent premature coagulation of the blood (e.g. before introducing into the enclosure), blood removal and transfer tool, etc.

Reference is also made to US 9,180,142, the relevant portions thereof being incorporated herein by reference.

BRIEF DESCRIPTION OF THE DRAWINGS

In order to better understand the subject matter that is disclosed herein and to exemplify how it may be carried out in practice, embodiments will now be described, by way of non-limiting example only, with reference to the accompanying drawings, in which:

Fig. 1 is a picture providing a bottom perspective view of an enclosure, according to an embodiment of this disclosure, which is in the form of a blister.

Figs. 2A and 2B are side perspective views illustrating the injection of blood into the enclosure.

Fig. 3 shows the removal of the closure revealing the clot formed within the enclosure.

Fig. 4 is a schematic illustration of a wound dressing prepared according to an embodiment of this disclosure.

DETAILED DESCRIPTION OF EMBODIMENTS

The embodiments illustrated in the annexed drawings include an enclosure in the form of a blister, which is an exemplary embodiment of the broader context of the present

disclosure. Thus, this description of specific embodiments is intended for illustration of the more general principle of this disclosure and is not intended to be limiting.

Referring first to **Fig. 1**, shown is a picture of an enclosure generally designated **100** and in the shape of a blister, having a main body **102** with a blister depression **104** and a flat rim **106**. Fitted onto the rim is a removable closure **108** in the form of a laminate/film.

Contained within the enclosure **100** is a coagulating initiator substance **110** which may be in the form of a liquid, powder, granulate, etc. The coagulation initiator may, for example, be kaolin. Also contained in the enclosure is a blood clot-supporting (scaffold) matrix **112** which may be made of gauze, of a polymeric mesh, etc., held at its peripheral portions between the rim and the closure and having a central portion within the enclosure.

Blood, typically whole blood, is withdrawn and then injected into the enclosure, as shown in **Figs. 2A and 2B**. Specifically, a needle **120** of a syringe **122** that contains the whole blood pierces the closure **108** and blood is injected until it fills a significant portion of the enclosure, sufficient to cover the blood clot-supporting scaffold matrix **112**, as seen in **Fig. 2B**. It is possible, also, to initially pierce the closure so as to form a vent opening, e.g. by the blood injection needle, and inject the blood only subsequently.

The blood is then maintained in the enclosure for a time sufficient for the blood to coagulate and after clotting the film **108** is removed to reveal a blood clot complex **130** that includes a blood clot **132** embedded with the blood clot-supporting scaffold matrix **112**, as seen in **Fig. 3**.

This blood clot complex **130** that includes the blood clot **132** and blood clot-supporting matrix **112** can then be combined with a dressing material **134**, as seen in **Fig. 4**; the dressing material being, for example, gauze, to form a dressing-clot complex. This dressing-clot complex combination can be transferred onto the wound; alternatively, after opening of the cover of the blister and revealing the blood clot complex, as seen in **Fig. 3**, the blood clot complex can be transferred onto a wound and the dressing material applied thereon while the former is on the wound.

CLAIMS:

1. A wound dressing assembly comprising

a blood-clotting mold device having an enclosure defined between walls of a main body and a removable closure over an opening and is configured for introduction of blood thereinto,

a coagulation initiator in an amount sufficient to coagulate blood introduced into the enclosure to form a blood clot, wherein

the formed blood clot is transferable onto a wound.

2. The wound dressing assembly of claim 1, wherein said coagulation initiator is comprised within the enclosure.

3. The wound dressing assembly of claim 1 or 2, wherein at least one of the walls and closure is pierceable by needle.

4. The wound dressing assembly of any one of the preceding claims, comprising a device for transferring the blood clot onto the wound.

5. The wound dressing assembly of any one of the preceding claims, wherein the device for transferring is a dressing material, e.g. gauze, and a tool for removal and transfer the blood clot onto a dressing or the wound.

6. The wound dressing assembly of any one of the preceding claims, wherein the enclosure comprises a vent that is *a priori* sealed, for removal of access pressure during injection of the blood into the enclosure.

7. The wound dressing assembly of any one of the preceding claims, wherein the enclosure is made of a material to which a blood clot does not adhere.

8. The wound dressing assembly of any one of the preceding claims, wherein the enclosure has the general shape of a blister and the closure is a removable film.

9. The wound dressing assembly of any one of the preceding claims, wherein at least a portion of the enclosure is transparent.

10. The wound dressing assembly of any one of the preceding claims, wherein the enclosure contains a blood-clot scaffold matrix.

11. A method for preparing a wound dressing, comprising:

introducing a volume of blood into an enclosure of a blood-clotting mold device, the enclosure being

defined between walls of a main body and a removable closure, and

comprises a coagulation initiator;

maintaining the blood within the enclosure for a time sufficient to permit clotting of the blood to thereby obtain a blood clot;

removing said closure to open the enclosure; and

extracting the blood clot from the enclosure.

12. The method of claim 11, comprising combining the blood clot onto a dressing material.

13. The method of claim 11 or 12, wherein the enclosure comprises a blood clot-support matrix and said extracting comprised removal of the clot with said matrix.

14. The method of any one of claims 11-13, wherein

at least one of the enclosure walls and the removable closure is pierceable by a needle and wherein

said introducing comprises piercing at least one of the wall and closure and injecting the blood therethrough.

15. The method of any one of claims 11-14, wherein the closure is a removable film.

16. The method of claim 15, wherein the enclosure has the general shape of a blister.

17. The method of any one of claims 11-16, wherein the enclosure is first pierced to form a vent and then the blood is injected.

18. The method of any one of claims 11-17, wherein the blood is whole blood.

19. A method for dressing a wound, comprising:

introducing a volume of blood into an enclosure that is

defined between walls of a main body and a removable cover, and

comprises a coagulation initiator;

maintaining the blood within the enclosure for a time sufficient to permit clotting of the blood to thereby obtain a blood clot;

removing said closure to open the enclosure;

extracting the blood clot from the enclosure; and

fixing the blood clot onto the wound.

20. The method of claim 19, wherein said fixing is with a dressing material.

21. The method of claim 19 or 20, wherein

the enclosure comprises a blood clot-support matrix, and wherein

said extracting comprised removal of the blood clot with the matrix.

22. The method of any one of claims 19-21, wherein

at least one of the enclosure walls and the removable closure is pierceable by a needle, and wherein

said introducing comprises piercing at least one of the wall and closure and injecting the blood therethrough.

23. The method of any one of claims 19-22, wherein the closure is a film that is removably adhered to rims of the enclosure walls.

24. The method of claim 23, wherein the enclosure has the general shape of a blister.

25. The method of any one of claims 18-24, wherein the enclosure is first pierced to form a vent and then the blood is injected into the enclosure.

26. The method of any one of claims 18-25, wherein the blood is whole blood.

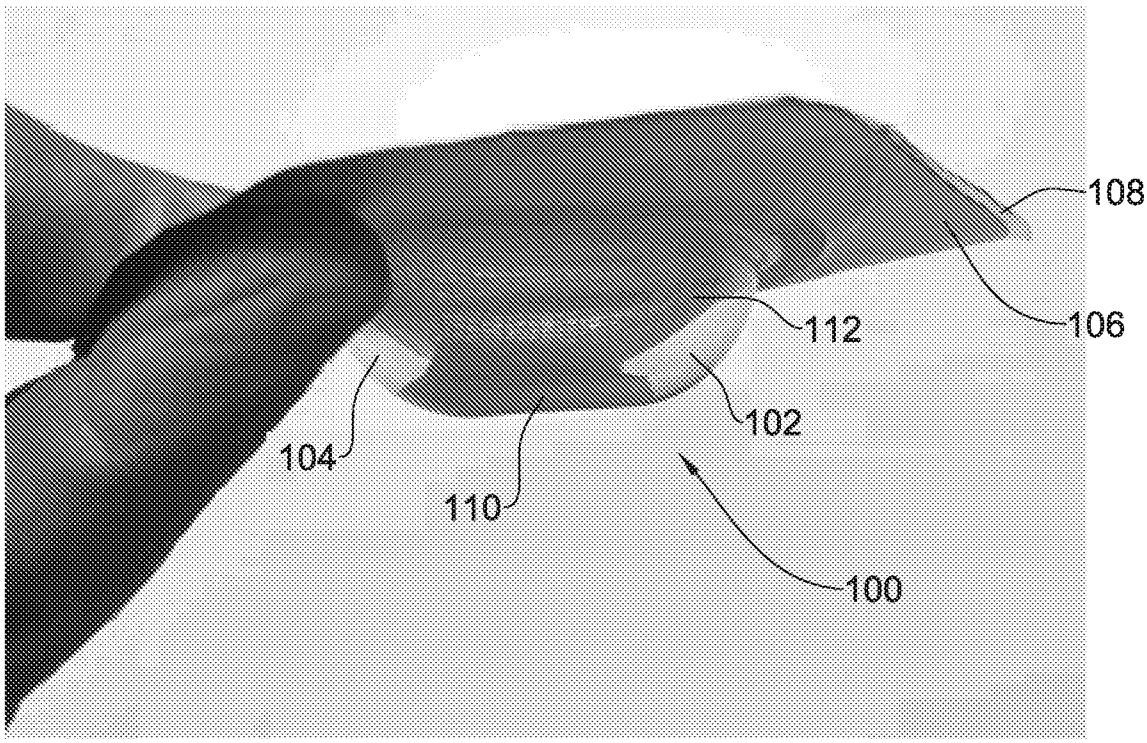

Figure 1

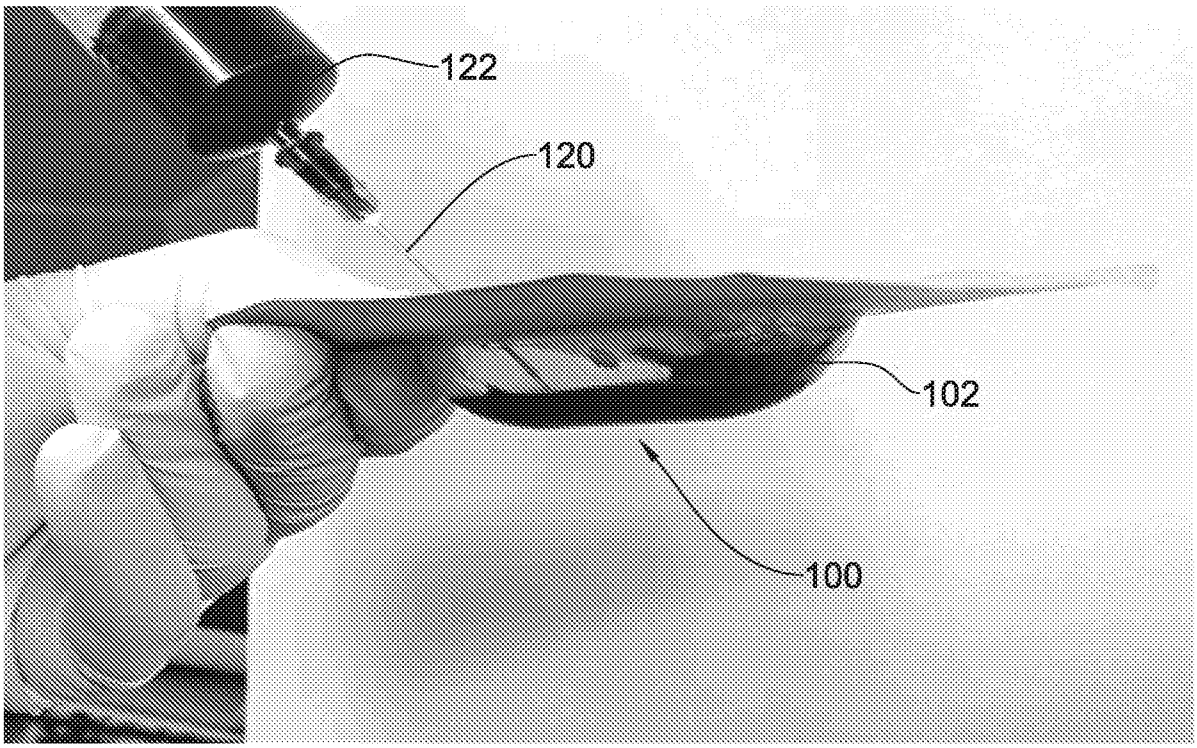

Figure 2A

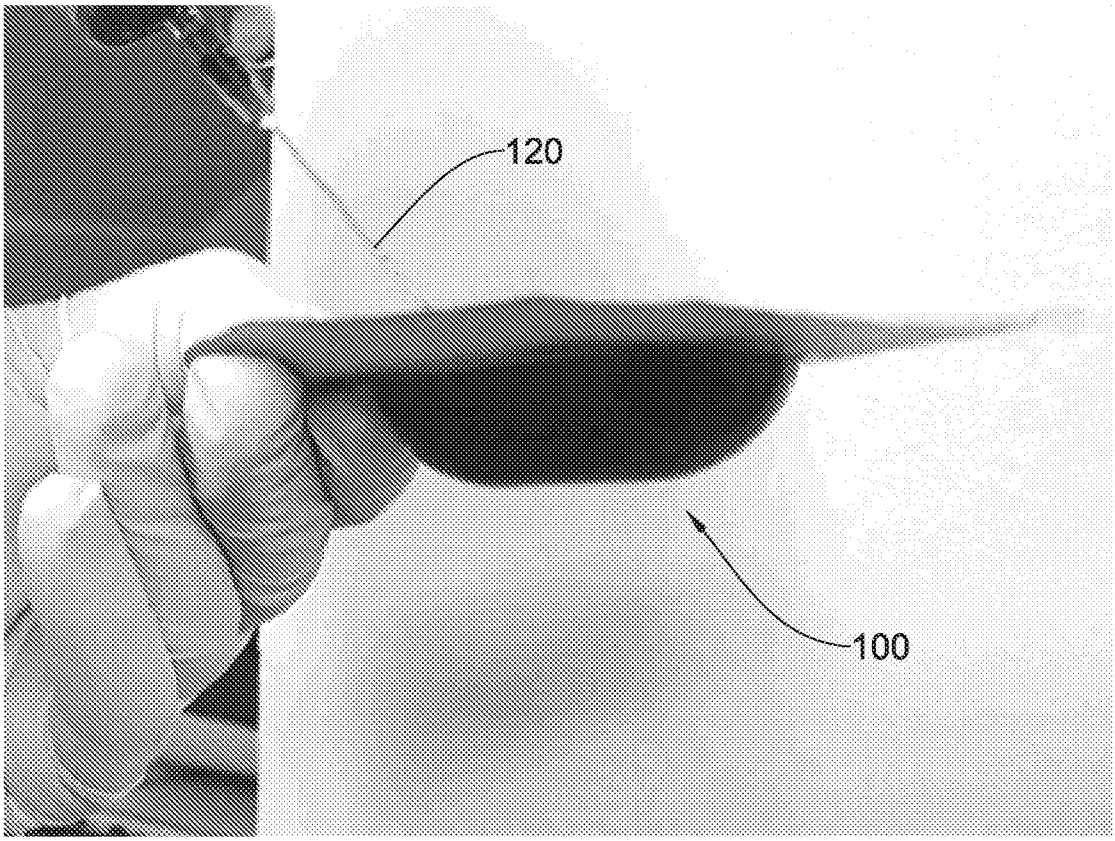

Figure 2B

Figure 3

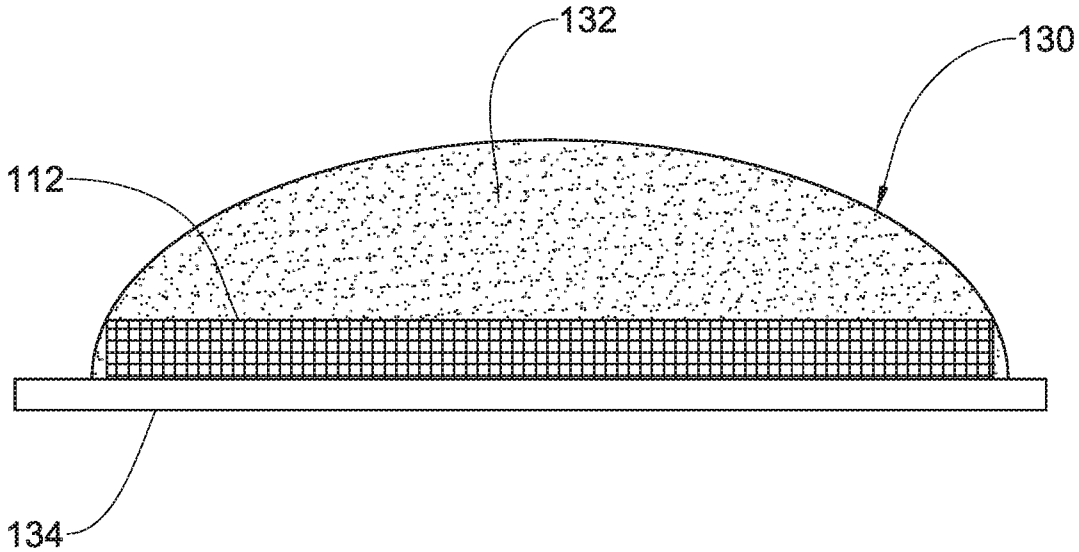

Figure 4

INTERNATIONAL SEARCH REPORT

International application No
PCT/IL2018/051051

A. CLASSIFICATION OF SUBJECT MATTER
INV. A61L26/00 A61L15/40
ADD.

According to International Patent Classification (IPC) or to both national classification and IPC

B. FIELDS SEARCHED

Minimum documentation searched (classification system followed by classification symbols)
A61L

Documentation searched other than minimum documentation to the extent that such documents are included in the fields searched

Electronic data base consulted during the international search (name of data base and, where practicable, search terms used)

EPO-Internal, WPI Data

C. DOCUMENTS CONSIDERED TO BE RELEVANT

Category*	Citation of document, with indication, where appropriate, of the relevant passages	Relevant to claim No.
X	WO 2010/086848 A2 (KUSHNIR ALON [IL]; KUSHNIR IGAL [IL]) 5 August 2010 (2010-08-05) page 11, line 24; figures 3,6 bridge sentence; page 8 - page 9 page 8, paragraph 1 page 20, lines 21-24 page 23, lines 14-16 -----	1-26

[ ] Further documents are listed in the continuation of Box C.

[X] See patent family annex.

* Special categories of cited documents :

"A" document defining the general state of the art which is not considered to be of particular relevance

"E" earlier application or patent but published on or after the international filing date

"L" document which may throw doubts on priority claim(s) or which is cited to establish the publication date of another citation or other special reason (as specified)

"O" document referring to an oral disclosure, use, exhibition or other means

"P" document published prior to the international filing date but later than the priority date claimed

"T" later document published after the international filing date or priority date and not in conflict with the application but cited to understand the principle or theory underlying the invention

"X" document of particular relevance; the claimed invention cannot be considered novel or cannot be considered to involve an inventive step when the document is taken alone

"Y" document of particular relevance; the claimed invention cannot be considered to involve an inventive step when the document is combined with one or more other such documents, such combination being obvious to a person skilled in the art

"&" document member of the same patent family

Date of the actual completion of the international search	Date of mailing of the international search report
20 December 2018	08/01/2019

Name and mailing address of the ISA/	Authorized officer
European Patent Office, P.B. 5818 Patentlaan 2 NL - 2280 HV Rijswijk Tel. (+31-70) 340-2040, Fax: (+31-70) 340-3016	Siebum, Bastiaan

INTERNATIONAL SEARCH REPORT

Information on patent family members

International application No
PCT/IL2018/051051

Patent document cited in search report	Publication date	Patent family member(s)	Publication date
WO 2010086848 A2	05-08-2010	AU 2010209342 A1	11-08-2011
		BR PI1005362 A2	13-12-2016
		CA 2750779 A1	05-08-2010
		CN 102341130 A	01-02-2012
		CN 107854717 A	30-03-2018
		DK 2381969 T3	05-09-2016
		EP 2381969 A2	02-11-2011
		ES 2587380 T3	24-10-2016
		JP 6134933 B2	31-05-2017
		JP 6419872 B2	07-11-2018
		JP 2012515602 A	12-07-2012
		JP 2015221212 A	10-12-2015
		JP 2017104602 A	15-06-2017
		KR 20110113754 A	18-10-2011
		KR 20170056705 A	23-05-2017
		PL 2381969 T3	30-12-2016
		US 2011318404 A1	29-12-2011
		US 2015044272 A1	12-02-2015
		US 2016256593 A1	08-09-2016
		WO 2010086848 A2	05-08-2010