Feb. 23, 1960 E. M. BERLY ET AL 2,925,881

ELECTRICAL PRECIPITATORS

Filed April 18, 1956 2 Sheets-Sheet 1

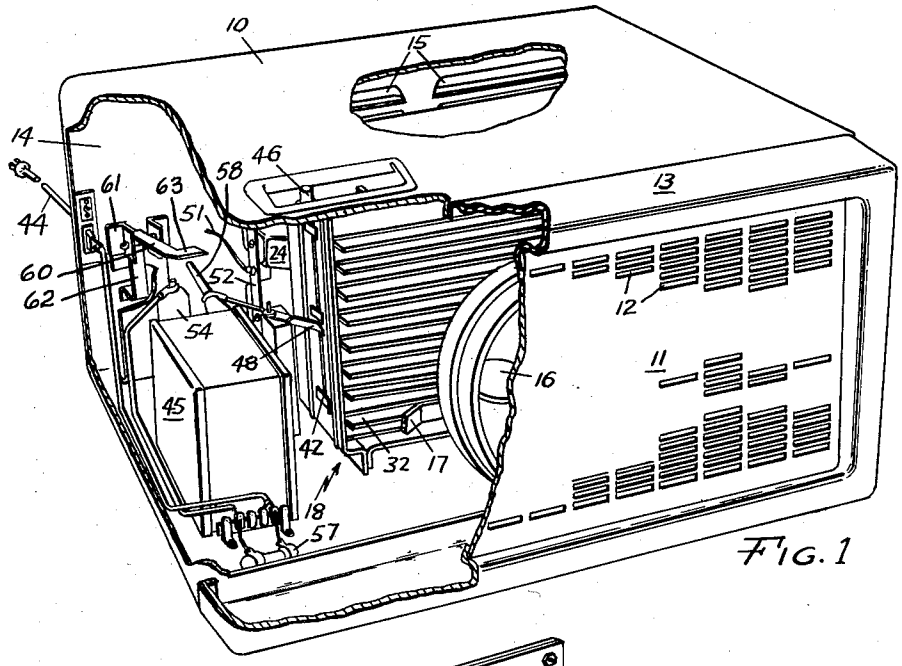

FIG. 1

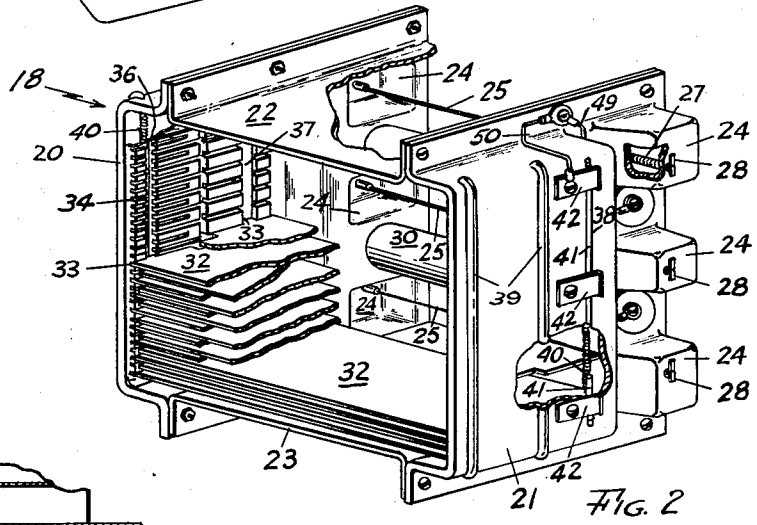

FIG. 2

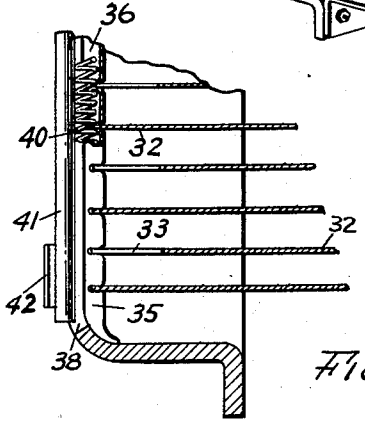

FIG. 3

INVENTORS
EDWARD M. BERLY
JEREMY WELTS

BY Elmer J. Gorn

ATTORNEY

Feb. 23, 1960 E. M. BERLY ET AL 2,925,881

ELECTRICAL PRECIPITATORS

Filed April 18, 1956 2 Sheets-Sheet 2

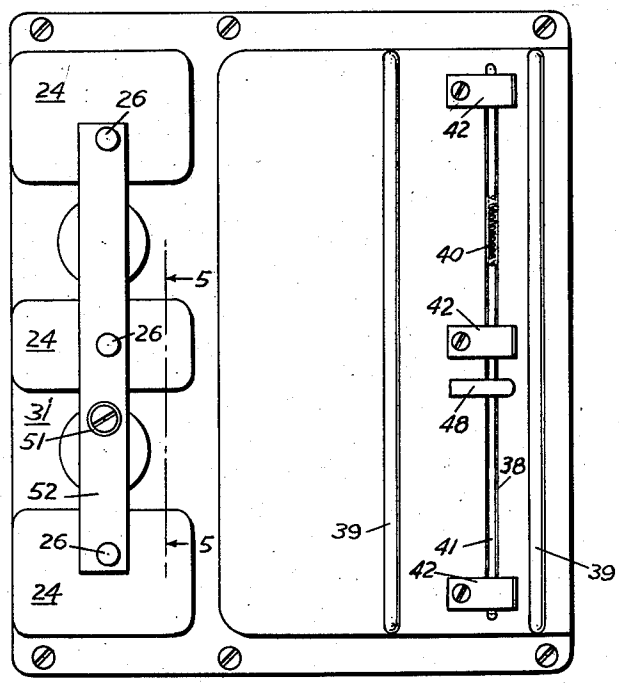

FIG. 4

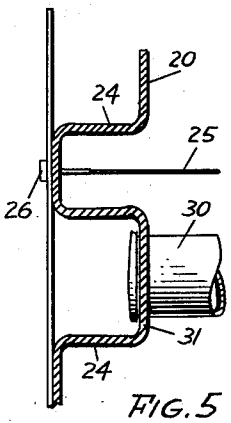

FIG. 5

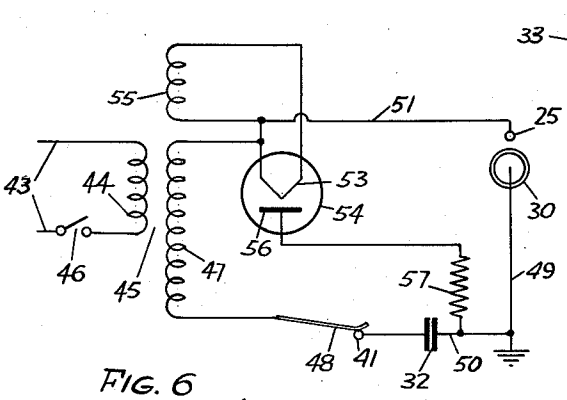

FIG. 6

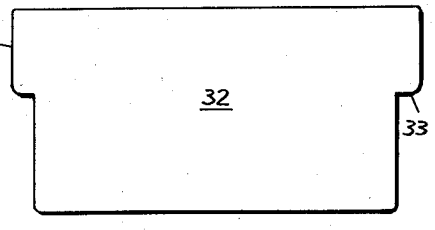

FIG. 7

INVENTORS
EDWARD M. BERLY
JEREMY WELTS
BY Elmer J. Gorn
ATTORNEY

United States Patent Office 2,925,881 Patented Feb. 23, 1960

2,925,881

ELECTRICAL PRECIPITATORS

Edward M. Berly, Waverley, and Jeremy Welts, Waltham, Mass., assignors to Raytheon Company, a corporation of Delaware

Application April 18, 1956, Serial No. 579,018

2 Claims. (Cl. 183—7)

This invention relates generally to electrical precipitators for separating dust, smoke, pollen, and other foreign matter from air and the like, and more particularly to a novel method for mounting and electrically connecting the ionizer electrodes and collector plates.

In precipitators of the type to which the invention relates, the air and other gas to be cleaned is first ionized in a suitable ionizing device, from whence it flows through a suitable precipitating means where dust and other foreign matter are collected. The ionizing device comprises at least one pair of ionizing electrodes adapted to have a sufficient potential placed between them to ionize the gas which flows in the space intermediate the electrodes. The precipitating or collector means commonly comprise a plurality of spaced, parallel collecting plates of substantial area, between which the ionized gas flows and on which the dust particles and other foreign matter are colletced, due to the difference in potential maintained across the adjacent plates. The potential across adjacent plates may be on the order of 6,000 volts, while the ionizing potential is substantially higher, for example, on the order of 12 kilovolts or more.

The high potential difference between the pairs of ionizer electrodes and the two sets of collector plates creates a problem of leakage of charge between pairs of ionizing electrodes or collector plates. By the present invention such leakage is reduced to a minimum by supporting these electrodes between two plates made of insulating material. The ionizer electrodes are in two groups; one group being wires and the other being relatively large cylinders at ground potential. The leakage path is increased by forming that portion of the supporting plates used to support the ionizing wires with recesses extending outward from the general plane of the supports to which the cylindrical electrodes are attached. The ionizing wires may be mounted parallel to each other in a common plane with the cylindrical electrodes or in a parallel plane upstream of the plane of the axes of the grounded electrodes. The ionizing wires are connected together and to a source of high potential, while the grounded electrodes are connected together and to the metallic frame of the unit. The collector plates are formed with a projection at each end extending less than half way across the width of the plates. They are mounted with their major planes parallel, so that the projections extend from opposite sides of the ends of adjacent plates. The projections fit into slots formed in the supporting insulating walls. The projections of all plates that are to be of the same potential are brought into contact with a compressional spring of conductive material by being inserted between the coils of the spring. Each spring is mounted in a slot in the supporting plates and held in place by a conductive rod and spring clips. Electrical potential is applied to the plates from a source of potential by means of a resilient element designed to make sliding contact with the conductive rod. One set of ionizer wires is connected together and through a bus bar and easily disconnectable connector to a source of potential, so that the proper potentials may be applied to the electrodes and collector plates when the unit is inserted into the case which contains the power supply. The entire subassembly carrying

the ionizing electrodes and collector plates may be removed from the case and easily cleaned or repaired. The individual collector plates may also be easily removed, cleaned, or replaced.

Other and further advantages and features of the invention will become apparent from the following description, reference being had to the drawings wherein:

Fig. 1 is an isometric view of the entire unit partly broken away;

Fig. 2 is an isometric view of the precipitator electrode subassembly partly broken away;

Fig. 3 is a detailed sectional view of a part of the side wall showing how the collector plates are mounted and electrically connected;

Fig. 4 is a side view of a supporting panel showing the method for supporting and electrically connecting the ionizer electrodes;

Fig. 5 is a section through a portion of the support panel of Fig. 4;

Fig. 6 is a schematic diagram of the electrical circuit of the invention; and

Fig. 7 is a plan view of a collector plate.

In Fig. 1 of the drawings, the reference numeral **10** designates the case of the apparatus generally. There is a cover **11** formed with a plurality of openings **12** mounted on the output side of the unit in a bezel **13**, mounted on the case **10** in any convenient manner. Similarly, there is a cover **14** formed with louvers **15**. A fan **16**, driven by a motor (not shown), is mounted behind the cover **11** of a bracket **17** in such a position as to pull air through the precipitator electrode unit, designated generally by the reference numeral **18**.

The precipitator subassembly **18**, best seen in Fig. 2, comprises two side walls or supporting plates **20** and **21** of insulating material attached to top-and-bottom-flanged, metallic plates **22** and **23**. The input portion of each support plate **20** or **21** is formed with outwardly projecting recesses **24**, in which are mounted the ionizing wires **25** by means of a clamped bushing **26** at one end, as shown in Fig. 5, and a spring **27** and cotter pin **28** at the other end. The cylindrical, metallic electrodes **30** of the ionizer are mounted in the original surface **31** of the support plates **20** and **21** between the recesses **24** in any convenient manner. The purpose of this construction will be given when the electrical circuit is discussed.

The collector plates **32** are formed with projections **33** at each end extending part way across the width of the plate as best seen in Fig. 7. The plates **32** are mounted with the projections extending alternately from one side and the other. They are mounted on transverse slots **34** formed in liners **35** made of insulating material, as best seen in Figs. 2 and 3. Longitudinal slots **36** and **37** are formed in each liner **35**, so positioned as to intersect the transverse slots **34** formed to receive the projections **33** on the plates, one such slot for each set of plates. A longitudinal slot **38** is formed in each side support **20** or **21** aligned with one of the slots **36** or **37** of the associated liner, as shown. The support plates **20** and **21** may be formed with ridges **39** in order to stiffen them. Compression springs **40** of conductive material are inserted into the slots **36** and **37** and are adapted to receive and grip the projections **33** of the associated plates **32**, as best shown in Fig. 3. A wire or rod **41** of conductive material is inserted in each slot **38**, and held in place by two or more spring clips **42**. With this construction, the individual collector plates may be easily removed for cleaning and replacement.

The electrical circuit of the apparatus is best shown in Fig. 6. The power line **43** is connected to the primary **44** of transformer **45** through a switch **46**. One side of a secondary winding **47** of transformer **45** is con-

nected to one set of collector plates 32 through a spring contact 48 of conductive material that contacts the rod 41. The other set of collector plates 32 is connected to metal member 22 and the case of the equipment 10 by means of a wire 50 connected to the set of clips 42 on support plate 21. The grounded cylindrical electrodes 30 are also connected to the frame, as by a conductor 49. The other end of the secondary winding 47 of the transformer 45 is connected to the ionizing wires 25 through a wire 51 and a bus bar 52. The filament 53 of a rectifier tube 54 is connected across a secondary winding 55 on the transformer 45. One side of the filament is also connected to the ionizer wires 25. The anode 56 of the tube 54 is connected to the case through a resistor 57.

A bar 58 of conductive material projects from the high voltage terminal of the transformer 45. A drop bar 60 of conductive material is connected to, and rotatably supported on, the case 10 by a bracket 61. The drop bar 60 is formed with two arms arranged at an angle. One arm 62 contacts the rear panel of the case in such a way as to hold the other arm 63 from contact with the bar 58 when the rear panel is in position. When the rear panel is removed, the arm 63 swings down into contact with the bar 58 to short the high voltage side of the transformer 45, and with it the high voltage plates of the collector, to discharge any charge built up on the collector plates which act as a capacitor. This protects anyone opening the case from shock.

It will be seen that there is a difference in potential between the ionizer wires 25 and the cylindrical electrodes 30 of the ionizer. In a representative case this potential difference may be 12,000 volts. It is thus important to increase the protective path across the surface of the support plates 20 and 21 without increasing the spacing between the electrodes 25 and 30. The recesses formed in the plates 20 and 21 in the regions where the ionizing wires 25 are supported accomplish this purpose. It would also be possible to mount the ionizing wires on projections formed in the supporting plates that project into the ionizing space.

There is also a considerable difference in potential between the sets of collector plates, in a representative case, 6,000 volts. These plates must also be as close together as possible and yet the leakage path between their support points must be as long as possible. This is accomplished by forming the collector plates, as best seen in Fig. 7 and as described above, with projections from each end extending less than half way across each end and mounting them so that the projections from adjacent plates project from opposite halves of the ends of the plates. Forming the side plates of insulating material aids in the solution of this leakage power problem. However, it is not a complete solution in itself, as paths of low resistance may be formed between points carrying a high relative potential. The chances of this occurring are reduced by increasing the length of this path. The separate liners and support members are merely an assembly convenience. The supporting slots may be formed in the support members.

Thus it becomes obvious that the wires 25 constitute a group or plurality of elongated electrodes, with each electrode being supported in an opposed pair of recesses 24 of plates 20 and 21. Likewise, cylindrical electrodes 30 constitute a plurality of elongated electrodes, with each electrode being supported on opposed original surfaces 31 of plates 20 and 21 between the recesses 24. Further, the collector plates 32 also form a plurality of elongated electrodes supported by liners 35 in the large opposed recesses of plates 20 and 21 shown in the drawings. The collector plates in fact constitute two groups of elongated electrodes with one group being connected to a source of potential through the transformer 45 and the other group being connected to ground. Thus a potential difference is established between the two groups

of plates 32. As discussed above, a potential difference also exists between the wires 25 and the cylindrical electrodes 30. It follows therefore that with a different voltage applied to plates 32 than that voltage applied to wires 25, then potential differences will exist between plate electrodes 32 and wire electrodes 25, between plate electrodes 32 and cylindrical electrodes 30, and between wire electrodes 25 and cylindrical electrodes 30. With these potential differences existing as described, it becomes more apparent why the terminus portions of the electrodes are mounted by the unique manner set out by this invention to avoid leakage power losses.

This invention is not limited to the particular details of construction, materials, and processes described, as many equivalents will suggest themselves to those skilled in the art. It is, accordingly, desired that the appended claims be given a broad interpretation commensurate with the scope of the invention within the art.

What is claimed is:

1. A combined ionizer and collector plate assembly for a precipitator apparatus, comprising a pair of plate-like insulating members each having a plurality of corresponding recessed portions therein, means for mounting said insulating members in spaced-apart relationship with corresponding recessed portions thereof in opposed relationship, a first elongate electrode having its opposite ends connected to and supported by respective opposed first recessed portions of said insulating members, a second elongate electrode having its opposite ends connected to and supported by respective opposed second recessed portions of said insulating members, and a third elongate electrode having its opposite ends connected to and supported by respective opposed other portions of said insulating members, and means for applying different electrical potentials between each pair of said electrodes, whereby increased electrical insulation is achieved between the ends of said electrodes connected to each of said insulating members by reason of the fact that no two such ends are mounted in a common one of said aforementioned portions of said insulating members.

2. A combined ionizer and collector plate assembly for a precipitator apparatus, comprising a pair of plate-like insulating members each having a plurality of corresponding recessed portions thereof in opposed relationship, a first plurality of elongate electrodes having their opposite ends connected to and supported by respective opposed first recessed portions of said insulating members, a second plurality of elongate electrodes having their opposite ends connected to and supported by respective opposed second recessed portions of said insulating members, a third plurality of elongate electrodes having their opposite ends connected to and supported by respective opposed other portions of said insulating members, respective common connecting means between the individual electrodes of each of said three pluralities of electrodes, and means for applying different electrical potentials between any two of said connecting means, whereby increased electrical insulation is achieved between the three pluralities of electrodes by reason of the fact that no two of said pluralities are mounted in a common one of said aforementioned portions of said insulating members.

References Cited in the file of this patent

UNITED STATES PATENTS

1,742,231	Cadell	Jan. 7, 1930
1,992,974	Thompson	Mar. 5, 1935
2,181,767	Penny	Nov. 28, 1939
2,465,100	Johnson	Mar. 22, 1949
2,476,248	MacKenzie	July 12, 1949
2,589,463	Warburton	Mar. 18, 1952
2,696,893	Richardson	Dec. 14, 1954
2,813,595	Fields	Nov. 19, 1957

FOREIGN PATENTS

214,377	Great Britain	Apr. 24, 1924

UNITED STATES PATENT OFFICE

CERTIFICATE OF CORRECTION

Patent No. 2,925,881 February 23, 1960

Edward M. Berly et al.

It is hereby certified that error appears in the printed specification of the above numbered patent requiring correction and that the said Letters Patent should read as corrected below.

Column 4, line 22, claim 1, and line 43, claim 2, for "having", each occurrence, read -- being generally planar but formed with a plurality of excursions from the plane to provide --.

Signed and sealed this 6th day of September 1960.

(SEAL)
Attest:

ERNEST W. SWIDER
Attesting Officer

ROBERT C. WATSON
Commissioner of Patents