June 18, 1929. D. BAKER ET AL 1,717,361

BIN SYSTEM

Filed June 8, 1926 2 Sheets-Sheet 1

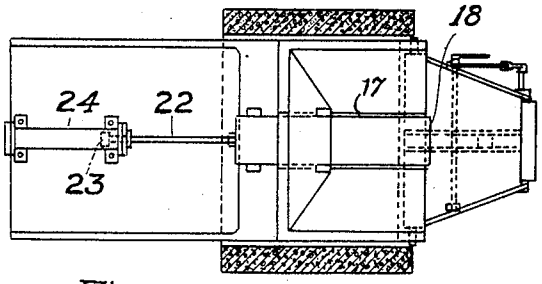

Fig. 1

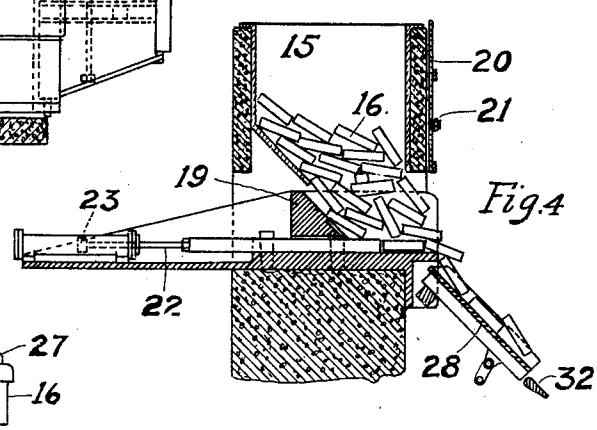

Fig. 4

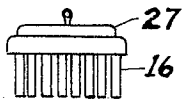

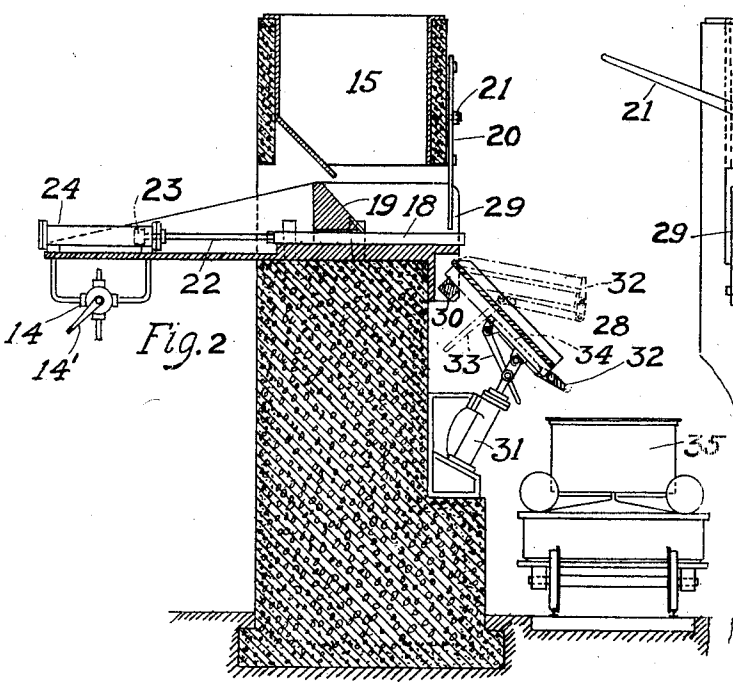

Fig. 2

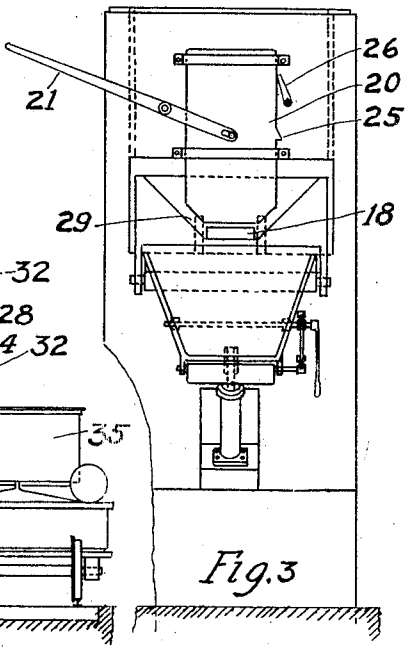

Fig. 3

INVENTOR
David Baker and
BY Walter S. Myers
J. W. Rowndale
ATTORNEY

June 18, 1929. D. BAKER ET AL 1,717,361

BIN SYSTEM

Filed June 8, 1926 2 Sheets-Sheet 2

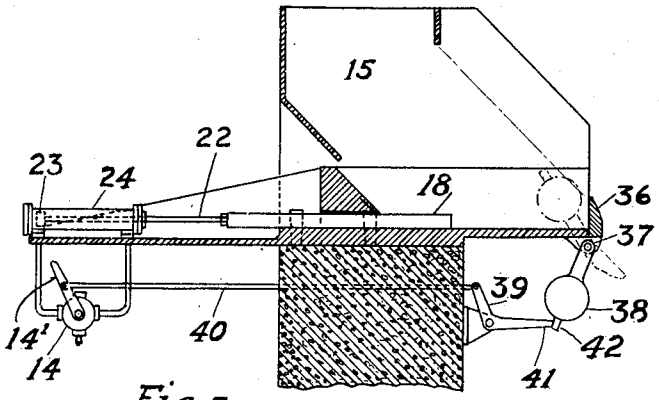

Fig. 5.

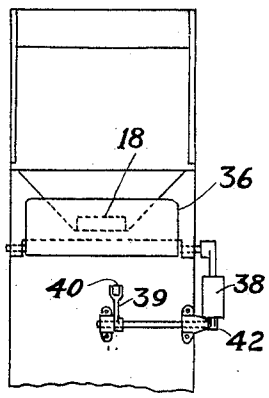

Fig. 6.

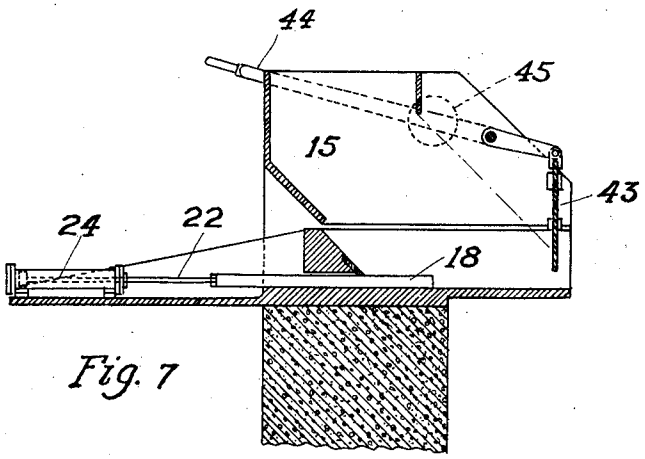

Fig. 7

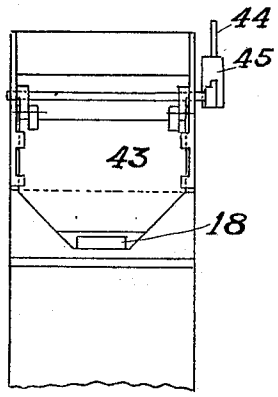

Fig. 8

INVENTOR
David Baker and
BY Walter D. Myers
Jno Rowndale
ATTORNEY

Patented June 18, 1929. 1,717,361

UNITED STATES PATENT OFFICE.

DAVID BAKER, OF SWARTHMORE, AND WALTER S. MYERS, OF DARBY, PENNSYLVANIA.

BIN SYSTEM.

Application filed June 8, 1926. Serial No. 114,410.

The invention relates to bin system and comprises improved means for handling industrial raw materials, especially for foundry use. The object is to provide improved means capable of delivering small or large quantities of material as required, and which permits of the use of a much lower and consequently less expensive bin.

Referring to the drawings which illustrate merely by way of example, suitable means for effecting the invention:

Fig. 1 is a plan view.

Fig. 2 is a vertical section.

Fig. 3 is a front elevation.

Fig. 4 is a vertical section of a part of the structure showing the slab or push bar in different position.

Fig. 5 is a vertical section showing a different form of gate for the bin.

Fig. 6 is a front elevation of same.

Fig. 7 is a vertical section showing a further modification of bin gate.

Fig. 8 is a front elevation of same.

Similar numerals refer to similar parts throughout the several views.

The bin 15 is provided with converging walls adapted to direct the material, such as 16, to the bottom opening or channel 17 of the bin upon and in front of the slab or push bar 18, which reciprocates beneath the element or breast 19, forming a part of the lower rear inclined wall of the bin 15.

This push bar or slab 18 is approximately of the same width as said bottom opening or channel 17, and where pig iron is operated upon, the width of the opening 17 and of bar 18 is substantially greater than the length of a pig.

The front wall of the bin, as shown in Figs. 1 to 4, is provided with the vertically sliding gate 20, operated by any suitable means, for example by the lever 21.

The slab or push bar 18 is reciprocated by any suitable means, as for example by the piston-rod 22 and piston 23, operating in cylinder 24 by means of a fluid under pressure, controlled by a suitable valve 14 operated by the lever 14′. The gate 20 may be arbitrarily locked in open position by means of the cooperating lug 25 and pawl 26.

In Fig. 2 is shown the magnet 27 for conveying and delivering the pig iron or other material 16 to the bin 15.

The chute 28 is positioned in front of and beneath the discharge mouth 29 of bin 15. It is pivotally supported at one end, as at 30, and is raised and lowered by means of a piston operating in cylinder 31. This chute 28, is provided with an end gate 32, operated, either automatically or by hand, by any suitable means as for example, the levers 33 and 34. These levers 33 and 34 have a toggle action, so that when in the position shown in dotted lines in Fig. 2, the lever pivots are in alinement and gate 32 is locked in the closed position until lever 33 is again actuated.

The chute 28, is adapted to deliver to the tub or other suitable receptacle, such as 35.

In Figs. 5 and 6, the bin 15 is shown provided with an end gate 36, pivoted at 37, and provided with the counterweight 38. The bell lever 39 is connected at one end by rod 40 to the valve lever 14′. The other end 41 of bell lever 39 is adapted to engage the lug 42 on counterweight 38 to lock the end gate 36 in closed position. When the valve handle 14′ is operated, the first action resulting therefrom is to release the lever end 41 from lug 42, before pressure is communicated to cylinder, so that the gate 36 is free to open by the pressure of material against it, before the discharging movement of the push bar 18 begins. That is to say, the controller valve has enough lag to permit the unlocking of the gate before the cylinder port is opened.

In Figs. 7 and 8 another form of bin gate 43 is shown, operated by the lever 44 provided with the counterweight 45.

In operation:

The bin being supplied with material such as pig iron, as shown in Fig. 4, the material may take a sloping position governed by the angle of repose, or a safety gate may be used to prevent material discharging from the bin until the push bar is operated. The chute is preferably in substantially horizontal position, the push bar 18 is reciprocated to discharge the material onto the chute. It will be understood that the forward movement of the bar 18 is the discharging movement; when the bar is moved in the opposite direction, it slides beneath the material, which is prevented from following the bar by the breast or element 19. The bar 18 is reciprocated until the desired amount of material is delivered onto the chute, whereupon the closing movement of valve handle 14′ will close and lock the gate 36, as in Fig. 5, and at the same time arrest the movement of the bar 18. The outer end of the chute is then low-

ered into the position shown in Figs. 2 and 4, or so that the material will just slide off of it, to the tub 35.

It will thus be seen that the operation of the push bar 18 can be regulated or controlled to deliver the exact quantity of material required, either large or small. This also permits using a much lower and consequently less expensive bin, than a gravity flow bin, since the material is delivered essentially straight out from the bottom of the bin, without the added height required to slide the material.

As above stated, the invention is especially adapted for handling industrial raw material, such as pig iron, for foundry use, and the reason for providing the push bar and bottom opening of the bin of a width greater than the length of a pig, is to prevent the pig iron forming a bridge, and thus prevent the pig iron from falling upon and in front of the push bar. The width of the discharge opening must obviously also be greater than the length of a pig, to prevent jamming. By the use of the term "bottom opening" we mean that part of the bin adjacent to the push bar, which is in open communication with the push bar and forms a passage or way therefor.

What we claim is:—

1. In combination with a bin, having a discharge opening in one side and extending to the bottom thereof, a push bar adapted to reciprocate near the bottom thereof toward and away from said opening, controlled means for causing said reciprocation, a gate for controlling said discharge opening and means operating synchronously with the push-bar-reciprocating-control for controlling the gate.

2. In combination with a bin for pig iron or the like, having a vertical front wall provided with a discharge mouth extending to the bottom thereof, a rear wall having its lower extension inclined toward the front wall and its lower margin spaced from the bottom of the bin, a breast having an inclined face in a plane near and parallel with the inclined plane of the rear wall, and providing a space above the bottom of the bin for a push bar, side walls converging toward the bottom with the lower edges thereof spaced to provide a channel for the push bar, a push bar and means for causing its reciprocation in said channel.

3. In combination with a bin for pig iron or the like, having a vertical front wall provided with a discharge mouth extending to the bottom thereof, a rear wall having its lower extension inclined toward the front wall and its lower margin spaced from the bottom of the bin, a breast having an inclined face in a plane near and parallel with the inclined plane of the rear wall, and providing a space above the bottom of the bin for a push bar, side walls converging toward the bottom with the lower edges thereof spaced to provide a channel for the push bar, a push bar and arbitrarily controlled means for causing its reciprocation in said channel.

4. In combination with a bin for pig iron or the like, having a vertical front wall provided with a discharge mouth extending to the bottom thereof, a rear wall having its lower extension inclined toward the front wall and its lower margin spaced from the bottom of the bin, a breast having an inclined face in a plane near and parallel with the inclined plane of the rear wall, and providing a space above the bottom of the bin for a push bar, side walls converging toward the bottom with the lower edges thereof spaced to provide a channel for the push bar, a push bar and controlled means for causing its reciprocation in said channel, a gate for controlling the discharge mouth of the bin and means operating synchronously with the push bar controlling means for operating the gate.

5. In combination with a bin for pig iron or the like, having a vertical front wall provided with a discharge mouth extending to the bottom thereof, a rear wall having its lower extension inclined toward the front wall and its lower margin spaced from the bottom of the bin, a breast having an inclined face in a plane near and parallel with the inclined plane of the rear wall, and providing a space above the bottom of the bin for a push bar, side walls converging toward the bottom with the lower edges thereof spaced to provide a channel for the push bar, a push bar and controlled means for causing its reciprocation in said channel, and means, operating synchronously with the push bar, for controlling the discharge from the bin.

DAVID BAKER.
WALTER S. MYERS.