Jan. 26, 1965 C. G. FRANTZ 3,166,777

VACUUM CLEANER WITH CORD RING

Filed April 1, 1963

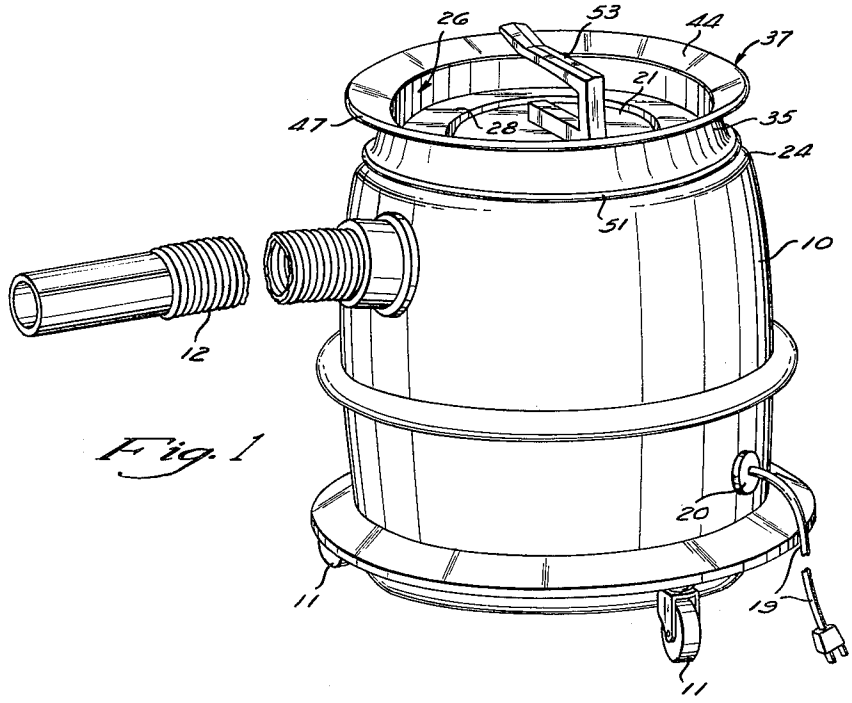

Fig. 1

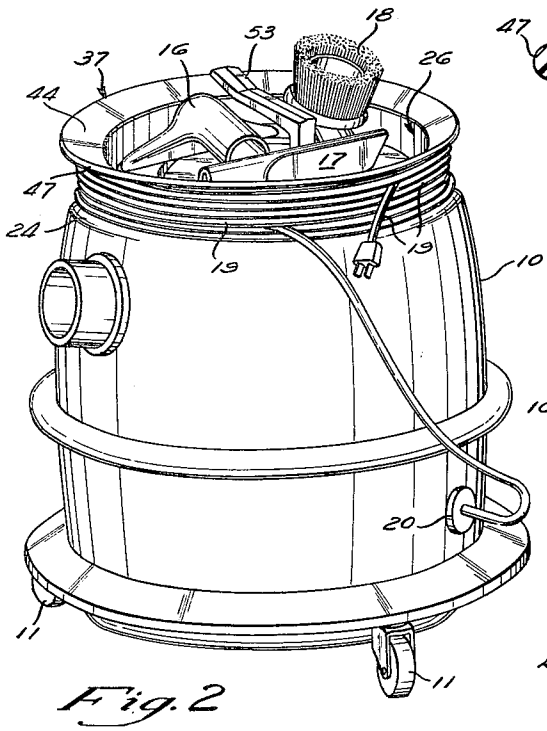

Fig. 2

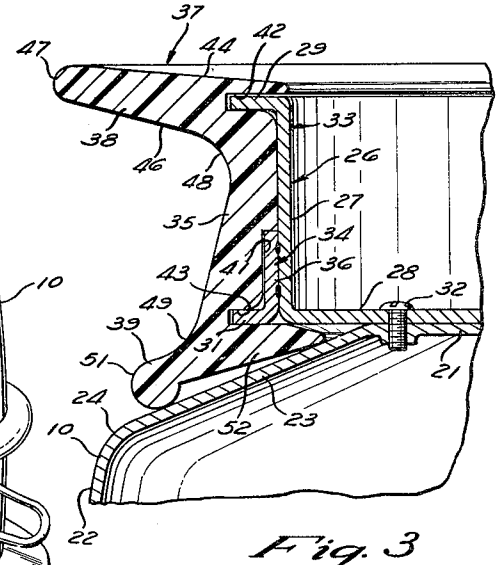

Fig. 3

INVENTOR.
CLARENCE G. FRANTZ
BY
RICHEY, McNENNY & FARRINGTON
Donald W. Farrington
ATTORNEYS

United States Patent Office 3,166,777 Patented Jan. 26, 1965

3,166,777

VACUUM CLEANER WITH CORD RING

Clarence G. Frantz, Cleveland Heights, Ohio, assignor to Frantz Electric Industries Inc., Cleveland, Ohio, a corporation of Florida

Filed Apr. 1, 1963, Ser. No. 269,602
4 Claims. (Cl. 15—323)

This invention relates generally to vacuum cleaners and more particularly to a novel and improved canister type vacuum cleaner having a rim around which the electric cord can be stored and within which the cleaner tools may be stored.

Canister and tank type cleaners are normally provided with a variety of tools, each of which is designed to efficiently perform a particular type of cleaning operation. It is desirable to retain all of these tools with the cleaner so that they are conveniently available for use at all times. It is also desirable to permit the convenient storage of the tools with the cleaner during periods of nonuse so that one or more of the tools will not become lost or misplaced.

Still further, it is desirable to arrange the cleaner with a convenient means for easily and neatly storing the electric cord during periods of storage so that the cord will not become tangled or caught with other items also stored in the same location as the cleaner.

In a vacuum cleaner incorporating this invention, a circular ring or rim is mounted on the upper end of the housing which provides a reel for a cord storage and also supplies a tray for the tool storage. Therefore, the tools are conveniently stored with the cleaner so that they will not become mislaid or lost and are always available when the cleaner is in use. These useful functions are achieved by a simple low-cost structure which also serves to enhance the appearance of the cleaner and protect it against damage.

It is an important object of this invention to provide a novel and improved combination cord reel and tool storage structure for vacuum cleaners and the like.

It is another important object of the invention to provide a novel and improved canister type cleaner having a rim portion at the upper end thereof for storing the electric cord of the cleaner and also the various cleaning tools.

It is still another object of the invention to provide a novel and improved vacuum cleaner of the canister type having a decorative rim on the upper end thereof which enhances the appearance of the cleaner and serves the function of providing for storage of the electric cord and cleaning tools.

It is still another object of this invention to provide a novel and improved canister type vacuum cleaner having a flanged rim on the upper surface thereof and a centrally located handle wherein the flanged rim is arranged for storage of the electric cord and the area within the rim around the handle is for the storage of the cleaning tools.

Further objects and advantages will appear from the following description and drawings wherein:

FIGURE 1 is a perspective view of a canister vacuum cleaner incorporating this invention;

FIGURE 2 is a perspective view similar to FIGURE 1 illustrating the cleaner with the electric cord wrapped for storage around the rim and cleaning tools supported on the cleaner; and

FIGURE 3 is a fragmentary section illustrating one preferred structure of the rim and its mounting upon the housing of the vacuum cleaner.

This invention is illustrated as incorporated in a typical canister type vacuum cleaner having a housing **10** supported for rolling along the floor on casters **11**. Located within the housing **10** is the usual electric motor driven fan operable to create a vacuum in the vacuum chamber of the housing **10**. Also enclosed within the housing **10** is a dirt separating mechanism which may be a bag type filter.

A flexible hose **12** couples to the housing **10** at the one end and is adapted at its other end for mounting a wand or tools. Any one of a variety of tools such as a furniture nozzle **16**, a crevice tool **17** or a brush tool **18** may be connected or mounted either directly on the hose **12** or the wand. Each of these tools **16**, **17** and **18** is proportioned and constructed to efficiently perform a particular type of cleaning operation. Therefore, it is customary in the use of the vacuum cleaner to frequently change the tools and use that tool best suited for the particular operation being performed. It is, therefore, desirable to retain all of the tools with the cleaner at all times so that each tool will be conveniently available for use.

An electric cord **19** extends through a grommet **20** in the housing **10** to the electric motor and is provided with a normal household type plug at its end.

The housing **10** is formed with a generally circular upper end wall or surface **21** joined to a side wall **22** by a conical portion **23** and a radius portion **24**. Mounted on the upper end **21** of the housing **10** is a mounting rim **26** formed with a cylindrical portion **27** and an inwardly extending lower end flange **28**. The mounting rim **26** is also formed with spaced outwardly extending radial flanges **29** and **31** at opposite ends of the cylindrical portion **27**. Screws **32** fasten the flange **28** to the end wall **21** of the housing **10**. In the illustrated embodiment, the mounting rim is formed of two pieces **33** and **34** each formed as a stamping. The piece **34** has a cylindrical section **36** spot-welded to the cylindrical portion **27** and provides the flange **31**.

A ring **37** molded of plastic material such as vinyl plastic or any other suitable material is mounted on the mounting ring **26**. The plastic ring **37** is formed with a veritcally extending portion **35** and integrally formed spaced outwardly extending flanges **38** and **39** at opposite ends thereof. The inner wall of the ring **37** is recessed at **41** to fit over the cylindrical section **36** of the piece **34** and is formed with radially extending grooves **42** and **43** to receive the flanges **29** and **31**, respectively. The upper flange **38** of the ring **37** is formed with a conical upper surface **44** and a conical lower surface **46** which are proportioned to converge as they extend toward a radius **47** joining their ends. The central portion **35** is formed with an increasing radius as it extends downward toward the flange **39** and is blended at both ends by radius portions **48** and **49** to the inner walls of the flanges **38** and **39**. A bead **51** is formed at the outer extremity of the flange **39** and is proportioned to engage the conical portion **23** of the housing **10**. Preferably the cylindrical portion **27** of the mounting ring **26** has a diameter greater than the upper end of the conical portion **23** to provide a recess between the lower flange **31** of the mounting ring and the conical portion **23**. An inwardly extending projection **52** on the ring **37** extends into this recess and provided stiffness for the ring.

The material of the ring **37** is sufficiently elastic to permit the ring **37** to be stretched over the mounting ring **26** and snapped into position. Also the ring is molded so that the bead **51** presses tightly against the conical portion **23** of the housing **10** to prevent entry of dirt and the like.

A U-shaped handle **53** is mounted with one leg thereof on the end **21** of the housing **10** and is located centrally of the mounting ring **26**. The opposite leg of the handle

provides a comfortable gripping portion used when the cleaner is carried.

The zone within the mounting ring 26 provides sufficient capacity for the storage of the tools and nozzles not being used at any given time. Therefore, the tools are carried by the cleaner both during the use of the cleaner and during the storage thereof. The cord 19 is wound around the ring 37 between the flanges 38 and 39, as illustrated in FIGURE 2, when the cleaner is not in use so that it is conveniently and easily stored and is not subjected to angling or the like.

A vacuum cleaner incorporating this invention is attractive in appearance and utilitarian in function since it provides a convenient storage for the tools not in use and a convenient cord drum to receive the electric cord when the vacuum cleaner is not in use. The plastic ring 37 serves to protect the cleaner and furniture since the plastic is resistant to chipping, denting and scratching. In addition the plastic ring operates, by its engagement with and mounting on the housing to dampen vibration and reduce noise.

Although a preferred embodiment of this invention is illustrated, it is to be understood that various modifications and rearrangements of parts may be resorted to without departing from the scope of the invention as defined in the following claims.

What is claimed is:

1. A vacuum cleaner comprising a housing, having a generally horizontal upper surface, a metallic rim mounted on said upper surface formed with an upstanding portion and radially extending spaced flanges at each end of said portion, and a ring of molded plastic fitting around said rim and formed with grooves into which said flanges extend, said ring having spaced radially extending flanges and an upwardly extending section therebetween, the inner portion of said ring above the upper one of said flanges of said rim extending into substantial alignment with the inner surface of said upstanding portion whereby the upper edge of said metallic rim is substantially covered by said plastic ring.

2. A canister vacuum cleaner comprising a housing having a circular horizontal upper end joined directly to a conical section, a rim mounted on said upper end having a lower flange extending laterally beyond said upper end, said rim including a vertically extending portion joined to said lower flange, a flexible molded ring mounted on said rim formed with an upper laterally extending flange and a lower laterally extending flange spaced from said upper flange, the extremity of said lower flange of said ring tightly engaging said conical section, and a handle centrally located within said rim mounted on said upper end.

3. A canister vacuum cleaner comprising a housing having a circular horizontal upper end joined directly to a conical section, a rim mounted on said upper end having a lower flange extending laterally along said upper end, said rim including a vertically extending portion joined to said lower flange, a flexible molded ring mounted on said rim formed with an upper laterally extending flange and a lower laterally extending flange spaced from said upper flange, a bead on the extremity of said lower flange of said ring tightly engaging said conical section, and a handle centrally located within said rim mounted on said upper end.

4. A canister vacuum cleaner comprising a housing having a circular horizontal upper end joined directly to a conical section, a rim mounted on said upper end having a lower flange extending laterally beyond said upper end above and spaced from said conical section, said rim including a vertically extending portion joined to said lower flange, a flexible molded ring having a portion extending between said conical section and said lower flange of said rim, said rim formed with an upper laterally extending flange and a lower laterally extending flange spaced from said upper flange, the extremity of said lower flange of said ring tightly engaging said conical section, an a handle centrally located within said rim mounted on said upper end.

References Cited in the file of this patent

UNITED STATES PATENTS

2,779,432	Meyerhoefer	Jan. 29, 1957
2,918,692	Martinec	Dec. 29, 1959

FOREIGN PATENTS

41,554	Netherlands	Sept. 15, 1937
57,630	Netherlands	May 15, 1946