June 15, 1926. 1,588,524

W. H. CANNARD ET AL

INTERFOLDING MACHINE

Filed Nov. 3, 1924 5 Sheets-Sheet 1

Fig. 1.

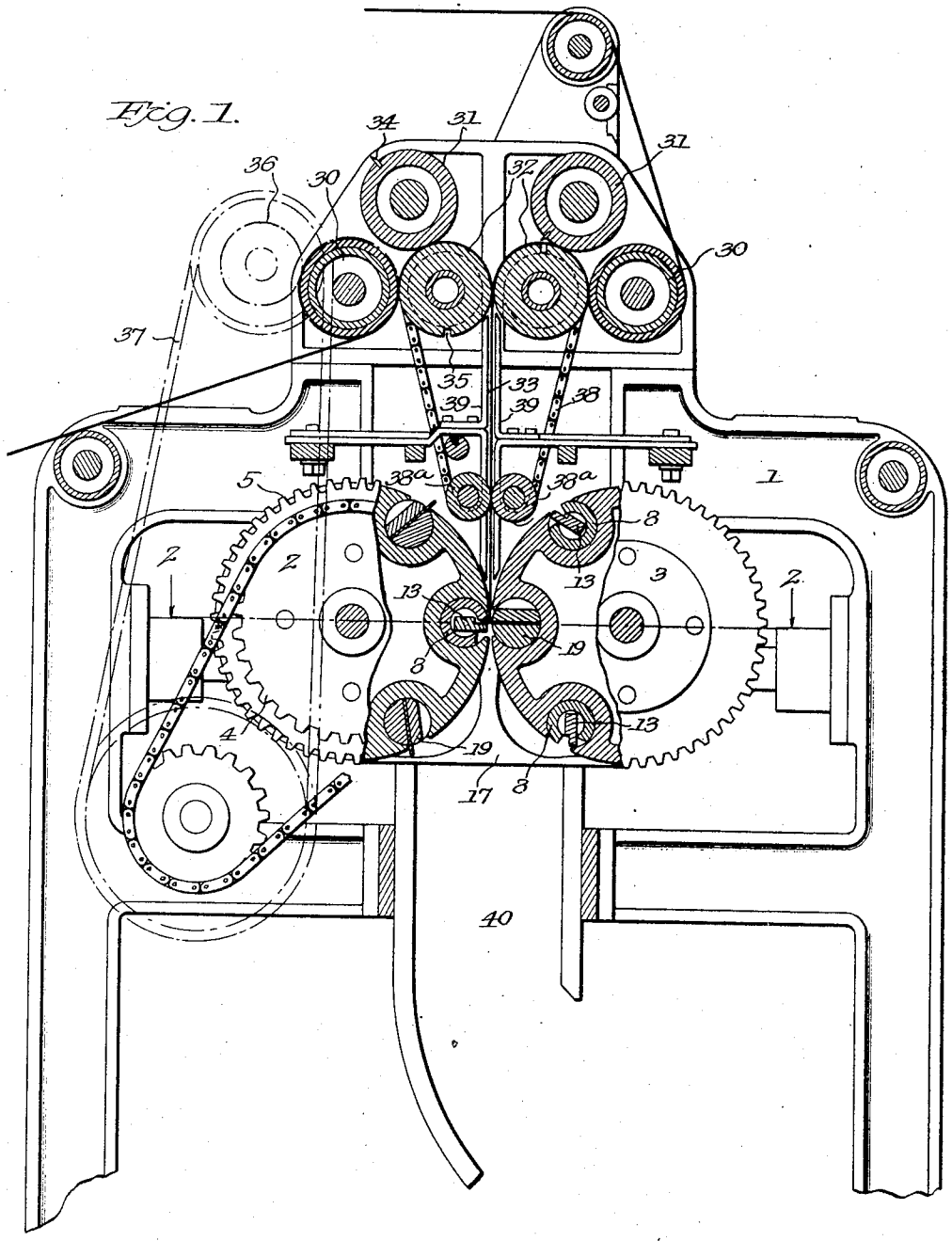

Inventor
William H Cannard
Glenn A. Shaffer

By Edmund F. Lane
Attorney

June 15, 1926. 1,588,524

W. H. CANNARD ET AL

INTERFOLDING MACHINE

Filed Nov. 3, 1924 5 Sheets-Sheet 2

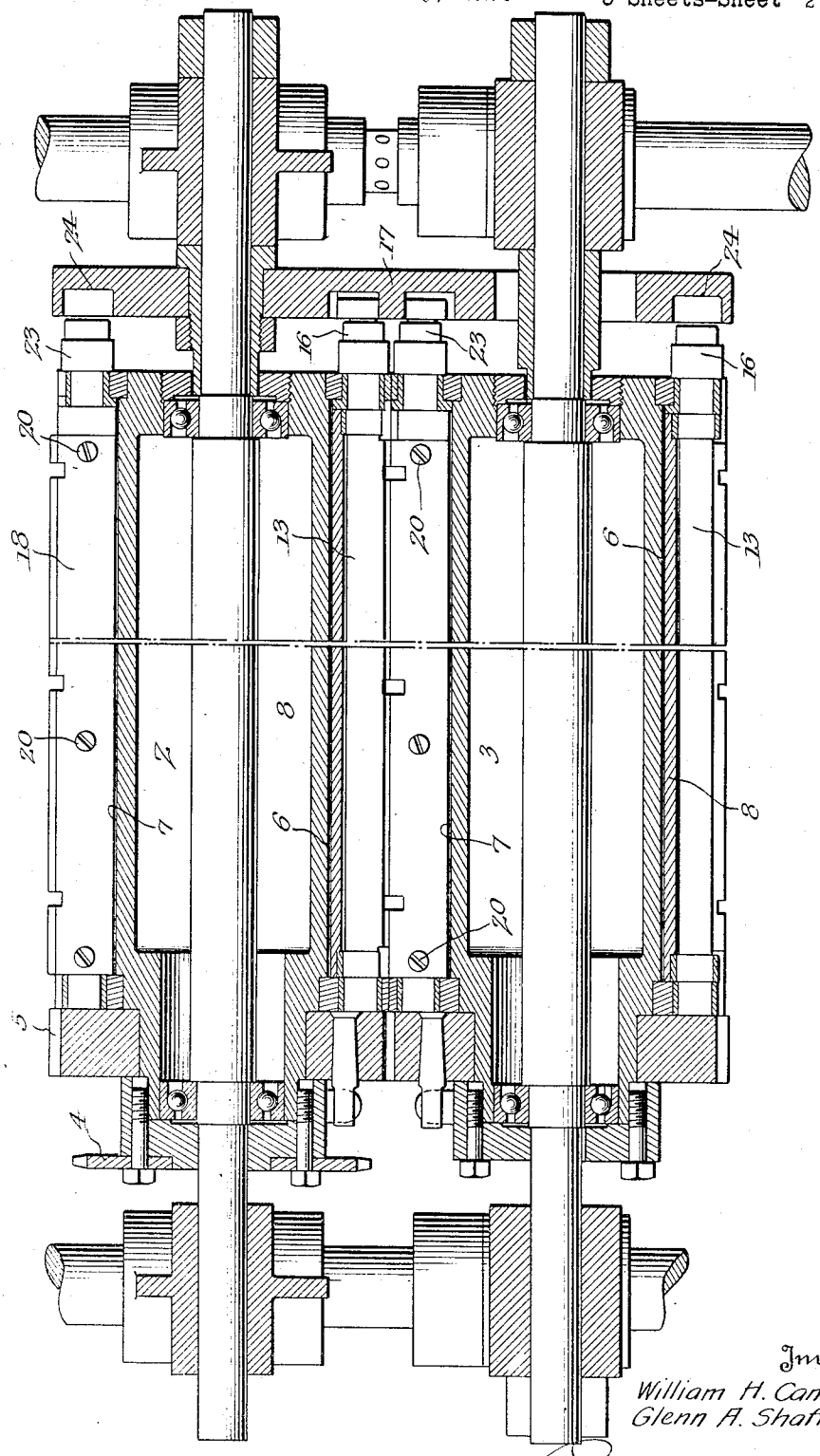

Fig. 2.

Inventor
William H. Cannard
Glenn A. Shaffer

By Edmund H. Parry
Attorney

June 15, 1926.

1,588,524

W. H. CANNARD ET AL

INTERFOLDING MACHINE

Filed Nov. 3, 1924

5 Sheets-Sheet 3

Fig. 11.

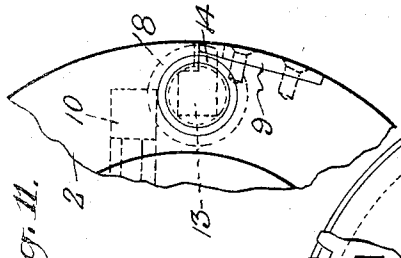

Fig. 3.

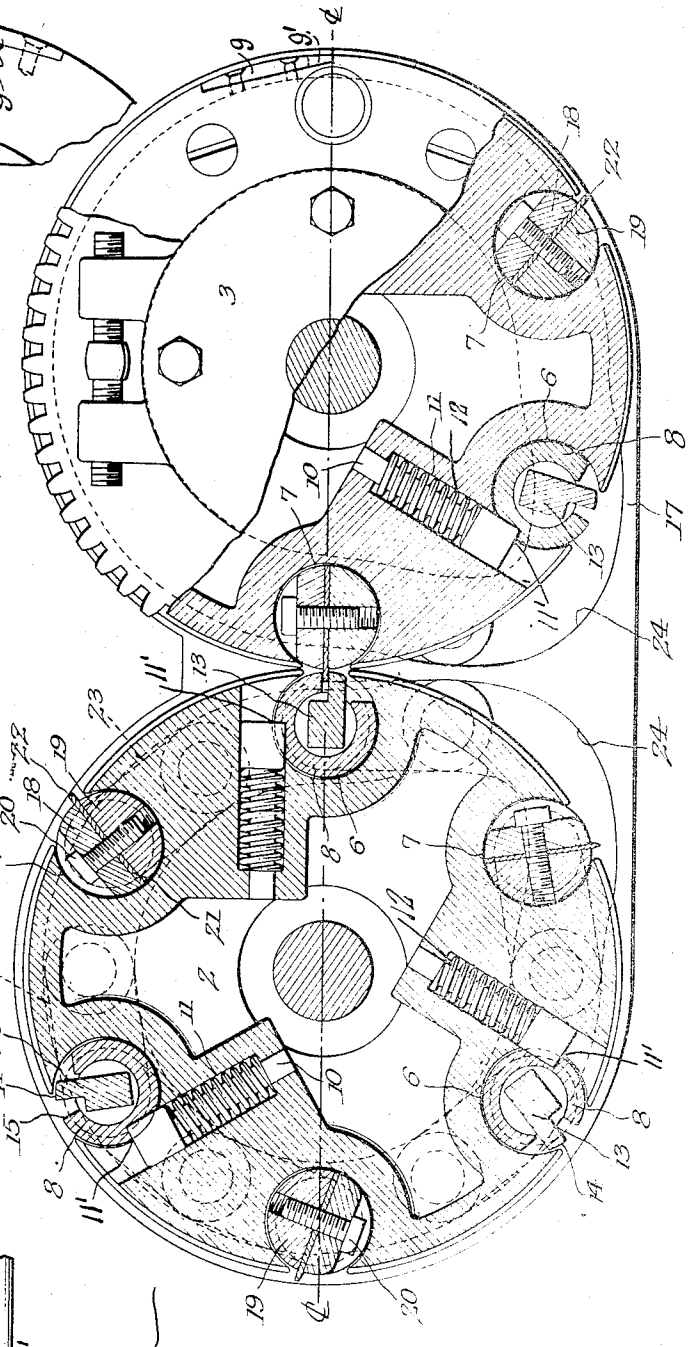

Fig. 12.

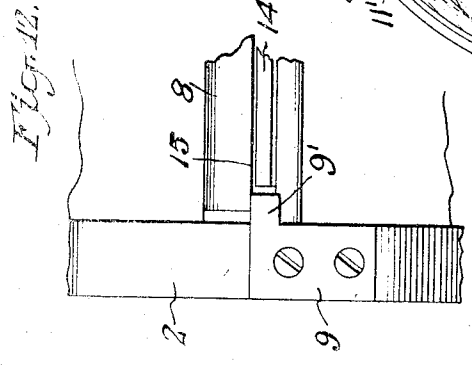

Inventor

William H. Cannard

Glenn H. Shaffer,

By

Attorney

June 15, 1926. 1,588,524

W. H. CANNARD ET AL

INTERFOLDING MACHINE

Filed Nov. 3, 1924 5 Sheets-Sheet 4

Fig. 4.

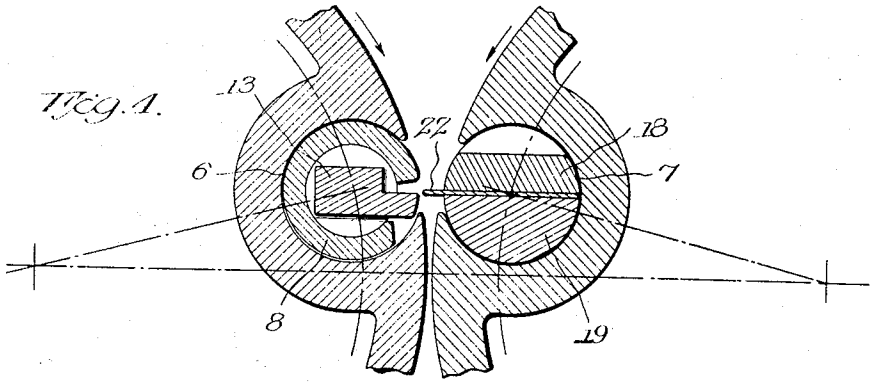

Fig. 5.

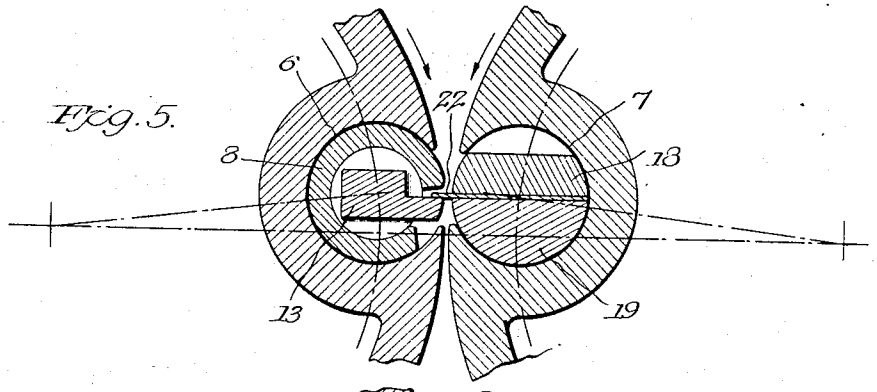

Fig. 6.

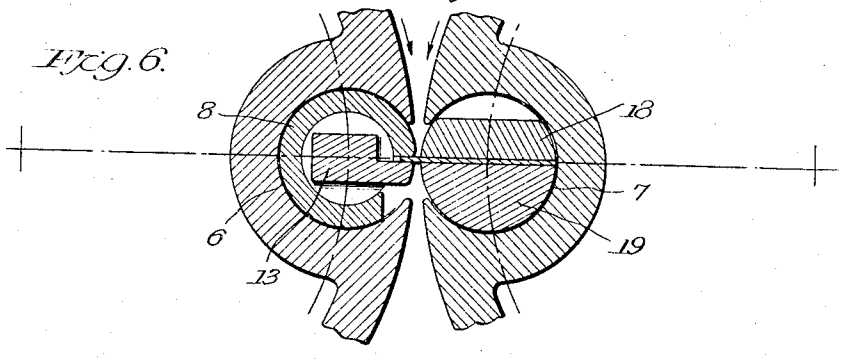

Fig. 7.

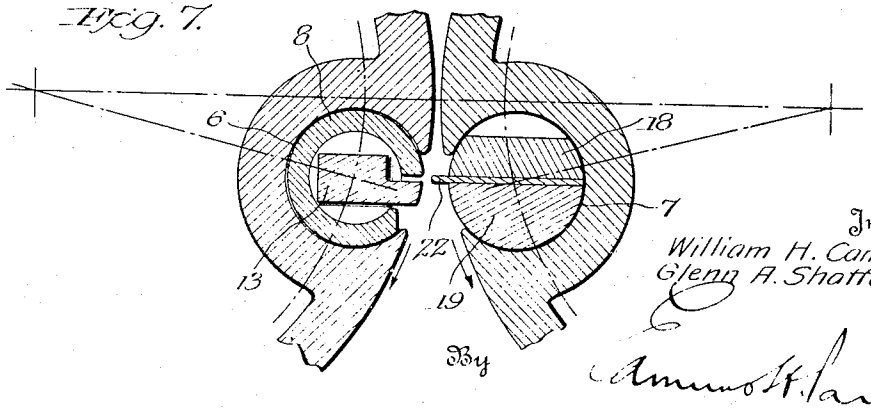

Inventor
William H. Cannard
Glenn A. Shatter

By

Attorney

June 15, 1926. 1,588,524

W. H. CANNARD ET AL

INTERFOLDING MACHINE

Filed Nov. 3, 1924 5 Sheets-Sheet 5

Fig. 8.

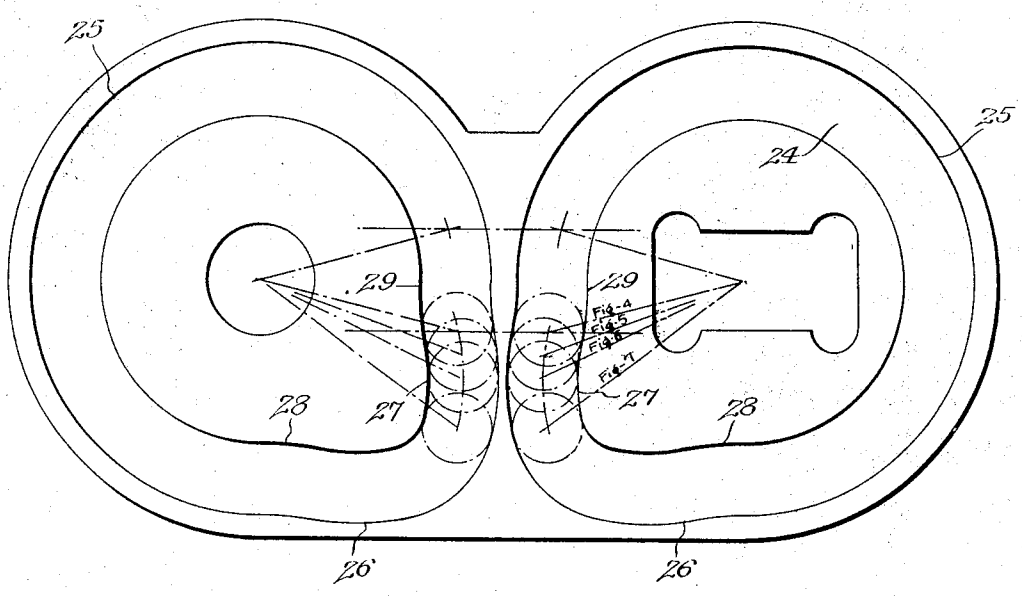

Fig. 9.

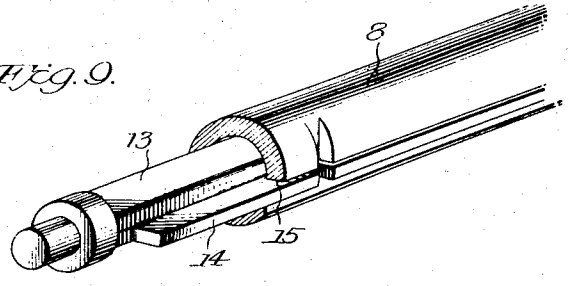

Fig. 10.

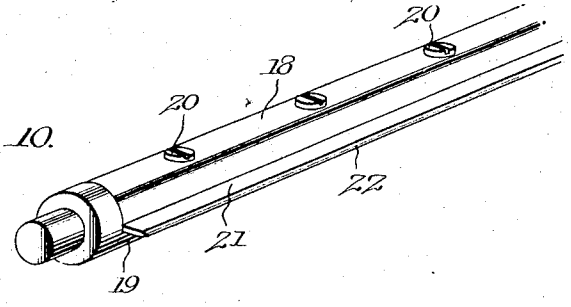

Inventor
William H. Cannard
Glenn A. Shaffer

By Emmet H. Parry
Attorney

Patented June 15, 1926. 1,588,524

UNITED STATES PATENT OFFICE.

WILLIAM H. CANNARD AND GLENN A. SHAFFER, OF GREEN BAY, WISCONSIN, ASSIGNORS TO SAID CANNARD.

INTERFOLDING MACHINE.

Application filed November 3, 1924. Serial No. 747,632.

This invention primarily relates to interfolding machines and, more specifically, to the rotary type thereof.

The machine here disclosed as a practical embodiment of our inventive-concept is designed to effect an interfolding of a plurality of sheets or strips of material, such as paper and, particularly, tissue-paper, like toilet paper. Its utilization is, however, not restricted to that particular class of material, as it may be employed for interfolding paper towels and the like, or other articles.

In certain aspects, the structure of the present case utilizes certain features of the machine disclosed in our application filed September 29, 1921, Serial No. 504,023. In other aspects, it is characterized by a radical departure therefrom. In the machine of our earlier application, a pair of intergeared rotatable drums are employed, and on each of these is a plurality of sets of pinch-members—in the form of rotatable rolls—with means for effecting continuous rotation of the members during the rotation of the drums; a plurality of rotatable tucker-members mounted in each drum in alternate arrangement with the sets of pinch-members; and means for maintaining the tucker-members in a definite position in respect to the axes of the drums even while such member is rotating on its axis. The present structure includes the intergeared drums and the tucker-controlling feature (though of a different type) of the earlier machine; but comprises oscillatable jaw or vise-members—as the pinch-devices—in contradistinction to the rotatable pinch-rolls of the earlier structure. It further differs from the earlier machine in utilizing a cam-device for controlling the action of the pinch-members or jaws. In that respect, it more especially resembles the structure of a more recent application filed by us August 16, 1924, Serial No. 732,422. It differs from that structure, however, in that it utilizes the cam-device for also actuating the tucker-members.

It may now be stated that the object of the present invention is to provide, (1) efficient means for actuating the vise-jaws whereby they will effectually clamp and crease the folded sheets, and (2) means operating with certainty to effect a nicety of coaction between the vise-jaws on the one drum (while they are traveling therewith) and a tucker-member on the other drum, whereby the two sheets to be acted upon are nicely folded between the vise-jaws and, then, creased therebetween and thereby.

Another object within the contemplation of our invention is to provide means for synchronizing the action of the various instrumentalities on the drums, as well as the drums themselves, so as to insure a high-speed operation thereof and, thus, great efficiency of the machine and large production thereby.

Still another object, and one of a more specific character, is the provision of means operating in conjunction with the pinch or vise-members whereby they automatically adapt themselves to varying thickness of the sheets upon which they perform a folding and creasing operation.

Another object is to provide a novel means for feeding the sheets to be interfolded from the cutting instrumentalities to the interfolding structure of the machine.

Our inventive-concept is susceptible of embodiment in a variety of instrumentalities; but we have, in the accompanying drawings, shown the same in a preferred embodiment and one which we have demonstrated as highly practical, efficient and satisfactory. It is to be understood, however, that these drawings are merely illustrative and that the machine, as therein revealed, is capable of a wide range of modification and variation without departing from the underlying principles or salient features of the invention; and, likewise, that other embodiments and utilizations may be resorted to and yet be within the spirit thereof.

In these drawings:

Figure 1 is a view, somewhat fragmentary and in sectional elevation, of an interfolding machine constructed in accordance with said preferred embodiment thereof;

Fig. 2 is a view in horizontal section of the same on the line 2—2, Fig. 1;

Fig. 3 is a detached view, in sectional elevation, showing parts of Fig. 1 on an enlarged scale; and including the carriers or drums, the vise and tucker-members thereon, etc.;

Figs. 4, 5, 6, and 7 are fragmentary views, in section and more or less diagrammatic,

showing four successive positions of the vise-members and tucker-members as they approach the center line of the axes of the drums, while at that line, and after passing the same, respectively;

Fig. 8 is a view in elevation of a cam-device for synchronizing the action of the vise and tucker-members on the companion drums with several of the successive positions of the folding instrumentalities in relation to the center line of the axes of the drums charted thereon;

Fig. 9 is a view in perspective, partly in section, of one end of one of the vise-members;

Fig. 10 is a similar view of one end of one of the tucker-members;

Fig. 11 is a fragmentary detail view in end elevation of a portion of the roll shown at the left of Fig. 3 illustrating a stop and its location relative to the vise members; and

Fig. 12 is a similar view in side elevation thereof.

Referring to these drawings, the reference-character 1 designates, generally, a machine-frame or drum-support of an interfolding machine of the so-called rotary type.

Intergeared drums.—Preferably and as shown, a plurality of coacting carriers, frames or drums 2, 3,—in this instance, two—are suitably mounted in the frame so that their axes extend in parallelism with each other and are disposed on a common center-line CL. These drums are intergeared at one end to effect their rotation in unison and in opposite directions. Any appropriate means may be employed for producing the required rotative movement of the drums, such as a sprocket 4 operating a gear 5 on the drum 2, the sprocket being driven from a prime-mover (not shown). Each drum is, preferably and as shown, provided with a series of longitudinally extending, peripheral recesses 6 and 7. Each recess is circular in form to constitute a member-housing, for a purpose presently to be explained.

Pinch-instrumentalities.—Movably mounted in each of the recesses or housings 6 is an annulus or substantially C-shaped vise-member 8, of slightly less external diameter than that of the internal bore of the housing so that it has a rotative fit therein. It is held against movement in one direction by stops or abutments 9 (Figs. 3, 11 and 12) at the ends of the drum. Preferably and as shown, each stop 9 comprises a plate set into the periphery of the drum, at the end thereof, and having an integral portion 9′ which extends inwardly from the body of the plate and longitudinally of the drum to engage the end portion of one of the flat longitudinal faces of the C-shaped member 8. Normally, this vise-member 8 is held against the stops by a spring-pressed plunger 10 mounted in a small chamber 11 in the drum and seated in an angular recess 11′, in the periphery of the member. By reason of the pressure developed by the spring 12 that forces the forward edge or corner of the plunger 10 into the substantially V-shaped recess 11′, the vise-member is normally held against its limit-stops 9 and is what we shall herein refer to as the stationary vise-member. The plunger permits it to have a slightly yielding action in opposition to the pressure of spring 12, counter-clockwise on roll 2 and clockwise on roll 3, as viewed in Fig. 3, for instance. Rotatively mounted within the bore of the annular vise-member 8 is what we shall herein refer to as a movable vise-member 13 having an elongated outstanding engaging-portion 14 alining with an engaging-portion 15 on the stationary vise-member. On one end of this movable vise-member is a roller-carrying crank 16 adapted to coact with one of a pair of cam-slots or grooves 24 in a cam-device 17, presently to be described, and which constitutes a component of a member-synchronizing mechanism, also to be described hereinafter. It is to be understood that the vise-members 8 and 13 constitute a set; and it is also to be understood that there are, in this instance, three sets of these on each drum, all operating in the same manner, periodically, for a sheet-interfolding operation.

Tucker - instrumentalities. — Movably mounted in each of the housings 7 is a tucker-member 18 comprising (preferably and as shown) a two-part supporting-element or rod 19, the parts thereof being secured together by bolts 20 and clamping between them a plate 21, one edge 22 of which projects beyond the periphery of the element 19 and constituting the effective or working instrumentality of the tucker-member. On one end of the supporting-element is a crank-arm 23 adapted also to coact with one of the slots or grooves 24 in the aforementioned cam-device 17, and whereby the tucker-member is oscillated or rocked on its axis for a partial revolution. It is to be noted that there are three of these tucker-members on each drum and that they alternate with the three sets of pinch-members thereon.

Synchronizing mechanism.—We have already referred to this mechanism as involving (as one of its components) the cam-device 17. There are two cam-slots in this device, one for each drum, mounted adjacent the end thereof and encompassing its axis. Each cam is stationary relatively to its respective drum and, to that end, is suitably secured to the drum-support. As shown in Figs. 2, 3 and 8, it comprises a plate provided, at opposite sides, with the cam-groove 24 which involves a circular section 25, two angular sections 26, 27, and two slightly offset sections 28 and 29 at the points where the

circular section joins with the angular sections, respectively. It will be understood that the roller-carrying crank-arms 16 and 23 of the vise and tucker-members, respectively, traverse these several sections successively and are thereby actuated to cause movements of those members in a manner presently to be explained.

Feeding, cutting and guiding mechanisms.—The webs or strips of material—such as tissue paper—to be cut and interfolded are drawn from rolls (not shown) and are fed (by rubber covered feed-rolls 30, 30,) between the cutting devices, comprising (in this instance) two sets of rollers, 31, 31, and 32, 32; thence (through a paper-guide generally marked 33) to and by the center-line CL. The cutting-device for each web—where, as here, there are two webs—comprises a cutter-carrying roll 31 having a radially extending cutter 34, and a companion-roll 32 provided with a cutter registering recess 35. This mechanism is driven by a gear 36 and a sprocket chain 37. Connected to the recessed rolls 32 are sprocket chains 38 which pass around rolls 38ª and constitute a part of the paper-feed of the machine. The two severed sheets—now ready to be interfolded together so that the leading end of one is brought into register with the fold in the other by the treatment to which the sheets will then be subjected—are directed by the paper-guide 33 (including its spaced-apart elements 39, 39) to the interfolding instrumentalities.

Operation.—The law of operation of our machine, as already described, is (so far as we are aware) quite unique, and we attribute the successful action thereof and the satisfactory results attained thereby to that fact. At any rate, it may here be mentioned that, in the interfolding of very thin material, such as tissue and toilet paper, there are mechanical problems involved which have been solved by us and successfully met in the structure constituting the subject-matter of the present case. Referring now, briefly, to the modus operandi of the machine, we will assume that the two webs of paper have been severed into lengths in such manner that the leading-in end of the second sheet is about central of the preceding sheet and, thus, in position to become inserted in the fold of that sheet when it shall have been folded. The drums each have a cycle of movement and, by their continuous rotation, will periodically position each tucker on one of them, and each set of the vise-members on the other toward the center line. When these tucker and vise instrumentalities reach the position, say, that is indicated in Fig. 4, the vise-members on the one drum will be open and the tucker-blade on the companion-drum will be disposed substantially in alinement with, but slightly angularly to, the sheet-engaging face of the movable vise-member, it moving during this stage toward the working face of the other vise-member. As the drums continue in their rotation, these same tucking instrumentalities are thereby brought into the position illustrated in Fig. 5, at which time the vise-members will be closing upon the tucker-blade and against the two sheets then being inserted thereby between those vise-members. When the tucking instrumentalities reach the position indicated in Fig. 6, the tucker-blade will be positioned to coincide with the center line CL, the vise-jaws will then be entirely closed and be clamping the two sheets against the tucker-blade, and the movable vise-member will be pushing upwardly and hard against the other vise-member which in turn (by reason of the action of the plunger bearing against it) may yield slightly but at the same time function, in conjunction with the other instrumentalities, to produce a pronounced crease in the sheets no matter how thin they may be. In other words, these instrumentalities will, when they reach a position coincident with the center line CL, effectually accomplish the folding and creasing of the two sheets. By the continued rotation of the drums, the then active tucking and folding instrumentalities will be carried away from the center line and to the position indicated in Fig. 7. At that point, the separation of the tucker-blade from the vise-members will have been effected and separation of the vise-members will have occurred so that, then, the folded sheets will be released therefrom into a chute 40 and thereby be directed to a conveyor (not shown). The successive action thereon by the described parts is such that the succeeding sets of sheets will have become folded with each other, that is, interfolded; and, then, be thereby transported away from the interfolding zone.

It will have been understood from the explanation heretofore given, first, that the cam-grooves 24 in the cam-device 17 will have influenced their respective tucker-instrumentalities as their roller-carrying crank-arms 16 and 23 travel in such grooves and come under the effective action of the various sections thereof, and as charted in Fig. 8; and, secondly, that each tucker-member on each drum performs the same function in relation to its respective set of vise-members as that already described. Each drum makes, continuously, a cycle of movement; each set of crank-arms in each of the cams likewise makes a cycle; these cycles are correlated; and, as the drums are intergeared and inasmuch as their respective synchronizing mechanisms are coordinated, it follows that there is a timing of the action of the tucking and creasing instrumentalities on each drum, successively, to effect three interfolding oper-

ations at each revolution of the drums. If desired, an increased number of the tucking and creasing instrumentalities could be included and, thus, augment the capacity of the machine. However, as at present designed, the machine's production is many hundred interfolded sheets per minute and, therefore, sufficient for all practical requirements.

In actual practice with the machine herein revealed, it has been demonstrated that even for the thinnest types of tissue paper, it functions most efficiently, and this is undoubtedly due to the coordinated relation and nicety of coaction of the parts, the smoothness of its running, and the high speed at which it is operated.

It is to be understood that the present disclosure is, and is intended to be, merely illustrative of a preferred and successful embodiment; that in the annexed claims the term "drum" is to be interpreted as involving and comprehending any appropriate type of rotatable frame or carrier; that the terms "tucker" and "tucker-member" (as herein used) are to be interpreted as involving any suitable type of tucking instrumentality capable of coacting with pinch-members in the manner herein defined; that the terms "vise-members", "pinch-members", and the like, are to be interpreted as involving any suitable type of structure capable of the action and the coaction with the hereindefined tucker that are defined in the foregoing; and that expression "intergeared", as referring to the drums, contemplates any practical means of connecting the drums for effecting their related cycles of operation. The feeding, cutting, and delivery structure herein revealed may be replaced by others of appropriate character. They are not herein specifically described since they are to constitute the subject-matter of another application.

What we claim is:

1. A machine for interfolding sheets of paper and the like, including a plurality of intergeared drums, having their axes disposed on a common center line, means for effecting rotation of the drums in opposite directions, a plurality of sets of oscillatable pinch-members on each drum, mechanism associated therewith for effecting an opening and closing of the members of each set during rotation of the drums and in predetermined relation to the center line of the axes of the drums, a plurality of oscillatable tucker-members on each drum in alternate arrangement to sets of pinch-members thereon, mechanism associated therewith for controlling relative movement of each tucker-member to position it at a predetermined time in definite relation to said center line, and means common to both of said mechanisms for actuating the pinch-members of a set and for governing the movement of a tucker-member whereby the latter will be projected between but without any substantial binding effect on the pinch-members and the latter be closed upon the tucker-member when said members reach a predetermined point in respect to said center line of the drums.

2. A machine for interfolding sheets of paper and the like, including a plurality of intergeared drums, having their axes disposed on a common center line, means for effecting rotation of the drums in opposite directions, a plurality of sets of oscillatable pinch-members on each drum, a member of each set having an approximately flat-paper-engaging surface, mechanism associated therewith for effecting an opening and closing of the members of each set during rotation of the drums and to position said paper-engaging surface in substantial parallelism with said center line in predetermined relation to the center line of the axes of the drums, a plurality of oscillatable tucker-members on each drum in alternate arrangement to sets of pinch-members thereon, mechanism associated therewith for controlling relative movement of each tucker-member to position it at a predetermined time in definite relation to said center line, and means common to both of said mechanisms for actuating the pinch-members of a set and for governing the movement of a tucker-member whereby the latter will be projected between but without any substantial binding effect on the pinch-members and parallel with said flat surface of one of said members, the latter being then closed upon the tucker-member when said members reach a predetermined point in respect to said center line.

3. A machine for interfolding sheets of paper and the like, including a plurality of intergeared drums, having their axes disposed on a common center line, means for effecting rotation of the drums in opposite directions, a plurality of sets of oscillatable pinch-members on each drum, a member of each set having an approximately flat paper-engaging surface, mechanism associated therewith for effecting an opening and closing of the members of each set during rotation of the drums and to position said paper-engaging surface in substantial parallelism with said center-line, in predetermined relation to the center line of the axes of the drums, a plurality of oscillatable tucker-members on each drum in alternate arrangement to sets of pinch-members thereon, mechanism associated therewith for controlling rotative movement of each tucker-member to position it at a predetermined time in definite relation to said center line, and means common to both of said mechanisms for actuating the pinch-members

of a set and for governing the movement of a tucker-member whereby the latter will be projected between but without any substantial binding effect on the pinch-members and parallel with said flat surface of one of said members, and in alinement with said center line, said members being then closed upon the tucker-member when said members reach a predetermined point in respect to said center line of the drums.

4. A machine for interfolding sheets of paper and the like, including a plurality of intergeared drums, having their axes disposed on a common center line, means for effecting rotation of the drums in opposite directions, a plurality of sets of oscillatable pinch-members on each drum, one member of each set being relatively stationary and having an approximately flat paper-engaging surface, the other member thereof being movable in relation thereto and having a clamping action thereon, mechanism associated therewith for effecting an opening and closing of the members of each set during rotation of the drums and in predetermined relation to the center line of the axes of the drums, a plurality of oscillatable tucker-members on each drum in alternate arrangement to sets of pinch-members thereon, mechanism associated therewith for controlling relative movement of each tucker-member to position it at a predetermined time in definite relation to said center line, and means common to both of said mechanisms for actuating the pinch-members of a set and for governing the movement of a tucker-member whereby the pinch-members will first be opened, then the tucker-member on the companion-drum be projected between the members and in sliding contact with said paper-engaging surface, and then the movable member be clamped against the tucker-member.

5. A machine for interfolding sheets of paper and the like, including a plurality of intergeared drums, having their axes disposed on a common center line, means for effecting rotation of the drums in opposite directions, a plurality of sets of oscillatable pinch-members on each drum, one member of each set being relatively stationary and having an approximately flat paper-engaging surface, the other member thereof being movable in relation thereto and having a clamping action thereon, mechanism associated therewith for effecting an opening and closing of the members of each set during rotation of the drums and in predetermined relation to the center line of the axes of the drums, a plurality of oscillatable tucker-members on each drum in alternate arrangement to sets of pinch-members thereon, mechanism associated therewith for controlling relative movement of each tucker-member to position it at a predetermined time in definite relation to said center line, and means common to both of said mechanisms for actuating the pinch-members of a set and for governing the movement of a tucker-member whereby the pinch-members will first be opened, then the tucker-member on the companion-drum be projected between the members and in sliding contact with said paper-engaging surface, and then the movable member be clamped against the tucker-member and then opened to a paper-releasing position when the drum carrying it has reached a predetermined point in its rotation.

6. An interfolding machine including companion supporting drums, the axes of which are disposed on a common center line, a set of oscillatable vise-members on each drum, one member of the set being relatively movable in respect to the other member of the set, mechanism associated with each movable member for actuating it away from its companion member, an oscillatable tucker-member on each drum adapted to coact with the vise-members on the other drum, and mechanism associated with the tucker-member for positioning it between the vise-members, said tucker-member while moving with its supporting-drum having a relative movement in respect to and a sliding action on one of the vise-members while these members are moving with their supporting drum and means common to said mechanisms, associated with each drum for controlling both of said mechanisms.

7. An interfolding machine including companion supporting drums, the axes of which are disposed on a common center line, a set of vise-members on each drum, one member of the set being relatively movable in respect to the other member of the set, mechanism associated with each movable member for actuating it away from its companion member, an oscillatable tucker-member on each drum adapted to coact with the vise-members on the other drum, and mechanism associated with the tucker-member for positioning it between the vise-members, said tucker-member while moving with its supporting-drum having a relative movement in respect to and a sliding action on one of the vise-members while these members are moving with their supporting drum, and means active on one of the vise-members for yieldingly pressing the same against the tucker-member while in coacting relation to the vise-members.

8. An interfolding machine including companion supporting drums, the axes of which are disposed on a common center line, a set of vise-members on each drum, one member of the set being relatively movable in respect to the other member of the set, mechanism associated with each movable member for actuating it away from its com-

panion member, an oscillatable tucker-member on each drum adapted to coact with the vise-members on the other drum, and mechanism associated with the tucker-member for positioning it between the vise-members, said tucker-member while moving with its supporting-drum having a relative movement in respect to and a sliding action on one of the vise-members while these members are moving with their supporting drum, and means active on one of the movable vise-members for yieldingly pressing the same against the tucker-member while in coacting relation to the vise-members, and means common to both of said mechanisms for effecting a synchronized actuation of the movable vise-member and the tucker-member in predetermined relation to said center line.

9. An interfolding machine including companion supporting drums, the axes of which are disposed on a common center line, a set of vise-members on each drum, one member of the set being relatively movable in respect to the other member of the set, mechanism associated with each movable member for actuating it away from its companion member, an oscillatable tucker-member on each drum adapted to coact with the vise-members on the other drum, and mechanism associated with the tucker-member for positioning it between the vise-members, said tucker-member while moving with its supporting-drum having a relative movement in respect to and a sliding action on one of the vise-members while these members are moving with their supporting drum, and means active on one of the vise-members for yieldingly pressing the same against the tucker-member while in coacting relation to the vise-members, and means common to both of said mechanisms for effecting a synchronized actuation of the movable vise-member and the tucker-member in predetermined relation to said center line whereby vise and tucker members are, respectively, given cycles of movement during which the movable vise-member is first moved away from its companion member to open the vise-members, the tucker-member is then positioned between the members with a sliding contact therewith, to tuck sheets of paper therebetween, the vise-members are then closed with the movable member yieldingly clamping against the tucker-member to crease the sheets, the tucker-member is then withdrawn from between the vise-members, and the vise-members then opened to release the folded sheets.

10. An interfolding machine including companion supporting drums, the axes of which are disposed on a common center line, a set of vise-members on each drum, one member of the set being relatively movable in respect to the other member of the set, mechanism associated with each movable member for actuating it away from its companion member, an oscillatable tucker-member on each drum adapted to coact with the vise-members on the other drum, and mechanism associated with the tucker-member for positioning it between the vise-members, said tucker-member while moving with its supporting drum having a relative movement in respect to and a sliding action on one of the vise-members while these members are moving with their supporting drum, and means active on one of the vise-members for yieldingly pressing the same against the tucker-member while in coacting relation to the vise-members, and means common to both of said mechanisms for effecting a synchronized actuation of the movable vise-member and the tucker-member in predetermined relation to said center line whereby vise and tucker members are, respectively, given cycles of movement during which the movable vise-member is first moved away from its companion member to open the vise-members, the tucker-member is then positioned between the members with a sliding contact therewith, to tuck sheets of paper therebetween, the vise-members are then closed with the movable member yieldingly clamping against the tucker-member to crease the sheets, the tucker-member is then withdrawn from between the vise-members, and the vise-members then opened to release the folded sheets, and means for effecting rotation of the drums periodically to bring the vise and tucker members into coactive relation.

11. An interfolding machine including companion supporting drums, the axes of which are disposed on a common center line, a set of vise-members on each drum, one member of the set being relatively movable in respect to the other member of the set, mechanism associated with each movable member for actuating it away from its companion member, an oscillatable tucker-member on each drum adapted to coact with the vise-members on the other drum, and mechanism associated with the tucker-member for positioning it between the vise-members, said tucker-member while moving with its supporting drum having a relative movement in respect to and a sliding action on one of the vise-members while these members are moving with their supporting drum, and means active on one of the vise-members for yieldingly pressing the same against the tucker-member while in coacting relation to the vise-members, and means common to both of said mechanisms for effecting a synchronized actuation of the movable vise-member and the tucker-member in predetermined relation to said center line whereby vise and tucker members are, respectively, given cycles of movement dur-

ing which the movable vise-member is first moved away from its companion member to open the vise-members, the tucker-member is then positioned between the members with a sliding contact therewith, to tuck sheets of paper therebetween, the vise-members are then closed with the movable member yieldingly clamping against the tucker-member to crease the sheets, the tucker-member is then withdrawn from between the vise-members, and the vise-members then opened to release the folded sheets, and means for effecting rotation of the drums periodically to bring the vise and tucker members into coactive relation, said rotative movement of the drums rendering said mechanisms active to actuate the vise and tucker members both to position them relatively and, also, to effect their coaction.

12. In an interfolding machine, a drum, means for rotating it, a set of oscillatable vise-members thereon, one of which is relatively stationary and the other movable in respect thereto, means for actuating the one member toward and from the other, and mechanism associated with one of the members and having a normal tendency to move the same with pressure toward the other member.

13. In an interfolding machine, a drum, means for rotating it, a set of oscillatable vise-members thereon, one of which is relatively stationary and the other movable in respect thereto, means for actuating the one member toward and from the other, and mechanism associated with one of the members and having a normal tendency to move the same with pressure toward the other member, and a tucker-member movable on an axis in parallelism with the axis of the drum.

14. In an interfolding machine, a drum, means for rotating it, a set of oscillatable vise-members thereon, one of which is relatively stationary and the other movable in respect thereto, means for actuating the one member toward and from the other, and mechanism associated with one of the members and having a normal tendency to move the same with pressure toward the other member, and a tucker-member movable on an axis in parallelism with the axis of the drum, and mechanism constantly active on the tucker-member for positioning it in predetermined relation to the axis of the drum.

15. In an interfolding machine, a drum, means for rotating it, a set of vise-members thereon, one of which is relatively stationary and the other movable in respect thereto, means for actuating the one member toward and from the other, and mechanism associated with one of the members and having a normal tendency to move the same with pressure toward the other member, and a tucker-member rotatable on an axis in parallelism with the axis of the drum, and mechanism constantly active on the tucker-member for positioning it in predetermined relation to the axis of the drum, and causing it to have a sliding movement on one of the vise-members.

16. In an interfolding machine, a drum, means for rotating it, a set of vise-members thereon, one of which is relatively stationary and the other movable in respect thereto, means for actuating the one member toward and from the other, mechanism associated with one of the members and having a normal tendency to move the same with pressure toward the other member and a tucker-member rotatable on an axis in parallelism with the axis of the drum, and mechanism constantly active on the tucker-member for positioning it in predetermined relation to the axis of the drum and causing it to have a sliding movement on one of the vise-members, and means common to both mechanisms for synchronizing the action of the vise and tucker-members to insure the timely projection between and withdrawal of the tucker-member from the active faces of the vise-members when said members have a definite relation to the horizontal plane of the drum.

17. In an interfolding machine, a drum, means for rotating it, a set of vise-members thereon, one of which is relatively stationary and the other movable in respect thereto, means for actuating the one member toward and from the other, and mechanism associated with one of the members and having a normal tendency to move the same with pressure toward the other member said means comprising a roller-carrying crank-arm.

18. In an interfolding machine, a drum, means for rotating it, a set of vise-members thereon, one of which is relatively stationary and the other movable in respect thereto, means for actuating the one member toward and from the other, and mechanism associated with one of the members and having a normal tendency to move the same with pressure toward the other member and a tucker-member rotatable on an axis in parallelism with the axis of the drum, and mechanism constantly active on the tucker-member for positioning it in predetermined relation to the axis of the drum and causing it to have a sliding movement on one of the vise-members said means comprising a roller-carrying crank-arm.

19. In an interfolding machine, a drum, means for rotating it, a set of vise-members thereon, one of which is relatively stationary and the other movable in respect thereto, means for actuating the one member toward and from the other, and mechanism associated with one of said members and having a normal tendency to move the same with

pressure toward the other member, said means comprising a roller-carrying crank-arm, a tucker-member movable on an axis in parallelism with the axis of the drum, mechanism constantly active on the tucker-member for positioning it in predetermined relation to the axis of the drum, and causing it to have a sliding movement on one of the vise-members and comprising a roller-carrying crank-arm, and means common to both mechanisms, and comprising a cam-device relatively stationary with respect to the drum and on which the roller-carrying arms track, for synchronizing the action of the vise and tucker members to insure the timely projection between and withdrawal of the tucker-member from the active faces of the vise-members when said members bear a definite relation to the horizontal plane of the drum.

20. An interfolding machine including companion carriers, each rotating on an axis parallel to that of the other, a set of vise-members on each carrier, at least one of which members is movable relatively, a tucker-member on each carrier adapted to coact with the vise-members on the other carrier, and means adjacent one end of the carriers and encircling the axes thereof for synchronizing the action of a tucker-member on one carrier and the movable vise-member on the other and including means for effecting rotation of the carriers in opposite direction, and instrumentalities connected with the tucker and vise-members and influenced by the synchronizing means to operate those members periodically at predetermined points in the rotation of the carriers, whereby the tucker-member on one carrier is positioned to permit introduction of its tucking part opposite to, then in between, and then out from, the jaw-members, and at the same time, the vise-members are positioned for their coaction with the tucker-member and the movable member is actuated in respect to the tucker-member.

21. An interfolding machine including companion carriers, each rotating on an axis parallel to that of the other, these axes being disposed on a common center line, a set of vise-members on each carrier, at least one of which members is movable relatively, a tucker-member on each carrier adapted to coact with the vise-members on the other carrier, and means adjacent one end of the carriers and encircling the axes thereof for synchronizing the action of a tucker-member on one carrier and the movable vise-member on the other and including means for effecting rotation of the carriers in opposite directions, and instrumentalities connected with the tucker and vise-members and influenced by the synchronizing means to operate those members periodically at predetermined points in the rotation of the carriers, whereby the tucker-member on one carrier is positioned at said center line to permit introduction of its tucking part opposite to, then in between, and then out from, the jaw-members and, at the same time, the vise-members are positioned at the center line for their coaction with the tucker-member and the movable member is actuated in respect to the tucker-member.

22. An interfolding machine, including companion carriers, each rotating on an axis parallel to that of the other, a cam-device adjacent one end of each carrier and encircling its axis, a set of vise-members on each carrier, at least one of the members of the set being relatively movable, means carried by such movable member and tracking on the cam-device for effecting relative movement between the members of the set to open and close them periodically, a tucker-member on each carrier adapted to coact with the vice-members on the other carrier, and means carried by the tucker-member and tracking on the cam-device for positioning it periodically for its coactive relation to the vise-members.

23. An interfolding machine, including companion carriers, each rotating on an axis parallel to that of the other, a cam-device adjacent one end of each carrier and encircling its axis, a set of vise-members on each carrier, at least one of the members of the set being relatively movable, means carried by such movable member and tracking on the cam-device for effecting relative movement between the members of the set to open and close them periodically, a tucker-member on each carrier adapted to coact with the vise-members on the other carrier, and means carried by the tucker-member and tracking on the cam-device for positioning it periodically for its coactive relation to the vise-members, the coaction of the tucker-member on the one carrier with the vise-members on the other carrier alternating with similar coaction between the tucker-member on that carrier and the vise-members on the companion carrier.

24. An interfolding machine, including companion carriers, each rotating on an axis parallel to that of the other, a cam-device adjacent one end of each carrier and encircling its axis, a set of vise-members on each carrier, at least one of the members of the set being relatively movable, means carried by such movable member and tracking on the cam-device for effecting relative movement between the members of the set to open and close them periodically, a tucker-member on each carrier adapted to coact with the vise-members on the other carrier, and means carried by the tucker-member and tracking on the cam-device for positioning it periodically for its coactive relation to the vise-members, the coaction of the

tucker-member on the one carrier with the vise-members on the other carrier alternating with similar coaction between the tucker-member on that carrier and the vise-members on the companion carrier, and means for effecting rotative movement of the carriers on their respective axes to accomplish the periodical coaction between the tucker and vise members thereon.

25. An interfolding machine, including companion carriers, each rotating on an axis parallel to that of the other, a cam-device adjacent one end of each carrier and encircling its axis, a set of vise-members on each carrier, at least one of the members of the set being relatively movable, means carried by such movable member and tracking on the cam-device for effecting relative movement between the members of the set to open and close them periodically, a tucker-member on each carrier adapted to coact with the vise-members on the other carrier, and means carried by the tucker-member and tracking on the cam-device for positioning it periodically for its coactive relation to the vise-members, the coaction of the tucker-member on the one carrier with the vise-members on the other carrier alternating with similar coaction between the tucker-member on that carrier and the vise-members on the companion carriers, and means active on the movable vise-member to press it toward and against the tucker-member during the coactive relation between it and the vise-members.

26. An interfolding machine, including companion carriers, each rotating on an axis parallel to that of the other, a cam-device adjacent one end of each carrier and encircling its axis, a set of vise-members on each carrier, at least one of the members of the set being relatively movable, means carried by such movable member and tracking on the cam-device for effecting relative movement between the members of the set to open and close them periodically, a tucker-member on each carrier adapted to coact with the vise-members on the other carrier, and means carried by the tucker-member and tracking on the cam-device for positioning it periodically for its coactive relation to the vise-members, the coaction of the tucker-member on the one carrier with the vise-members on the other carrier alternating with similar coaction between the tucker-member on that carrier and the vise-members on the companion carrier, and resilient means active on one of said vise-members to press it toward and against the tucker-member during the coactive relation between it and the vise-members.

27. An interfolding machine, including companion carriers, each rotating on an axis parallel to that of the other, a cam-device adjacent one end of each carrier and encircling its axis, a set of vise-members on each carrier, at least one of the members of the set being relatively movable, means carried by such movable member and tracking on the cam-device for effecting relative movement between the members of the set to open and close them periodically, a tucker-member on each carrier adapted to coact with the vise-members on the other carrier and comprising an oscillatable supporting-element and a blade thereon, and means carried by the tucker-member and tracking on the cam-device for positioning its blade periodically between the vise-members for a sliding movement therebetween and radially thereof, the coaction of the tucker-member on the one carrier with the vise-members on the other carrier alternating with similar coaction between the tucker-member on that carrier and the vise-members on the companion carrier.

28. An interfolding machine, including companion carriers, each rotating on an axis parallel to that of the other, a cam-device adjacent one end of each carrier and encircling its axis, a set of vise-members on each carrier, at least one of the members of the set being relatively movable means carried by such movable member and tracking on the cam-device for effecting relative movement between the members of the set to open and close them periodically, a tucker-member on each carrier adapted to coact with the vise-members on the other carrier and comprising an oscillatable supporting-element and a blade thereon, and means carried by the tucker-member and the tracking on the cam-device for positioning its blades periodically between the vise-members for a sliding movement therebetween and radially thereof, the coaction of the tucker-member on the one carrier with the vise-members on the other carrier alternating with similar coaction between the tucker-member on that carrier and the vise-members on the companion carrier, and means active on the movable vice-member for pressing it against the blade during its periodical engagement therewith.

29. In an interfolding machine, associated carriers having related cycles of movement, a cam-device cooperatively juxtaposed to each carrier, sets of vise and tucker members on each carrier, and operating arms connected to the members and traversing the cam-devices juxtaposed to the respective carriers and influenced thereby to effect the periodical coaction during movement of the carriers, of the members on adjacent carriers.

30. In an interfolding machine, associated carriers having related cycles of movement, a cam-device cooperatively juxtaposed to each carrier, sets of vise and tucker members on each carrier, and operating arms connected to the members and traversing the cam-devices and influenced thereby to effect their periodical coaction during movement

of the carriers; said vise-members including a C-shaped element and a movable element housed therein.

31. In an interfolding machine, associated carriers having related cycles of movement, a cam-device cooperatively juxtaposed to each carrier, sets of vise and tucker members on each carrier, and operating arms connected to the members and traversing the cam-devices and influenced thereby to effect their periodical coaction during movement of the carriers; said vise-members including a C-shaped element and a movable element housed therein, each element having self-engageable positions adapted to clamp against the tucker-member.

32. An interfolding machine including companion supporting drums, the axes of which are disposed on a common center line; a set of oscillatable vise-members on each drum, one member of the set being relatively movable in respect to the other; mechanism associated with the movable member for actuating it away from its companion member; a movable tucker-member on each drum adapted to coact with the vise-members on the other drum; mechanism associated with the tucker-member for actuating it to position it between the vise-members, said tucker-member while moving with its supporting drum having movement in respect to and having engaging action on one of the vise-members while these members are moving with their supporting drum; and means common to said actuating mechanisms for simultaneously controlling them to time their action in respect to their respective vice-members.

In testimony whereof we affix our signatures.

WILLIAM H. CANNARD.
GLENN A. SHAFFER.