US00D648884S

(12) United States Design Patent

Tortel

(10) Patent No.: US D648,884 S
(45) Date of Patent: ** Nov. 15, 2011

(54) **OUTDOOR LIGHTING FIXTURE**

(75) Inventor: **Michel Tortel**, Saint-Maximin-La-Sainte-Beaume (FR)

(73) Assignee: **Schreder, S.A.**, Brussells (BE)

(**) Term: **14 Years**

(21) Appl. No.: **29/363,339**

(22) Filed: **Jun. 8, 2010**

(30) **Foreign Application Priority Data**

Dec. 8, 2009 (EM) 001182539-0001

(51) **LOC (9) Cl.** **26-05**

(52) **U.S. Cl.** **D26/71**

(58) **Field of Classification Search** D26/67–71, D26/85, 92; 362/145, 183, 231, 240, 249.02, 362/249.03, 249.04, 249.06, 249.16, 373, 362/311.02, 697, 547, 431, 432
See application file for complete search history.

(56) **References Cited**

U.S. PATENT DOCUMENTS

D577,455 S * 9/2008 Zheng et al. D26/71
D578,697 S * 10/2008 Zheng et al. D26/71
D603,077 S * 10/2009 Kinnune et al. D26/71
D615,233 S * 5/2010 Josefowicz et al. D26/71
D615,235 S * 5/2010 Zheng D26/71
D631,999 S * 2/2011 Little et al. D26/71
D632,000 S * 2/2011 Little et al. D26/71
D632,819 S * 2/2011 Kong et al. D26/71
D634,875 S * 3/2011 Jiang et al. D26/71

* cited by examiner

Primary Examiner — Clare E Heflin
(74) *Attorney, Agent, or Firm* — Kirschstein, et al.

(57) **CLAIM**

The ornamental design for an outdoor lighting fixture, as shown and described.

DESCRIPTION

FIG. **1** is a perspective view from above of an outdoor lighting fixture according to my design;
FIG. **2** is a top plan view thereof;
FIG. **3** is a left side elevational view thereof, the right side elevational view being a mirror image;
FIG. **4** is a front elevational view thereof;
FIG. **5** is a rear elevational view thereof; and,
FIG. **6** is a bottom plan view thereof.
The dashed lines in the views are for environmental purposes and form no part of the claimed design.

1 Claim, 5 Drawing Sheets

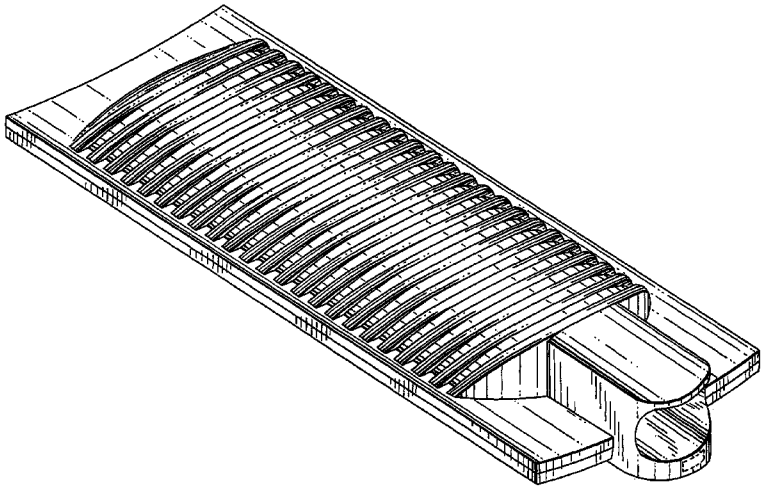

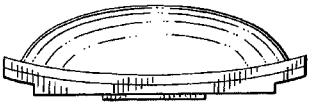

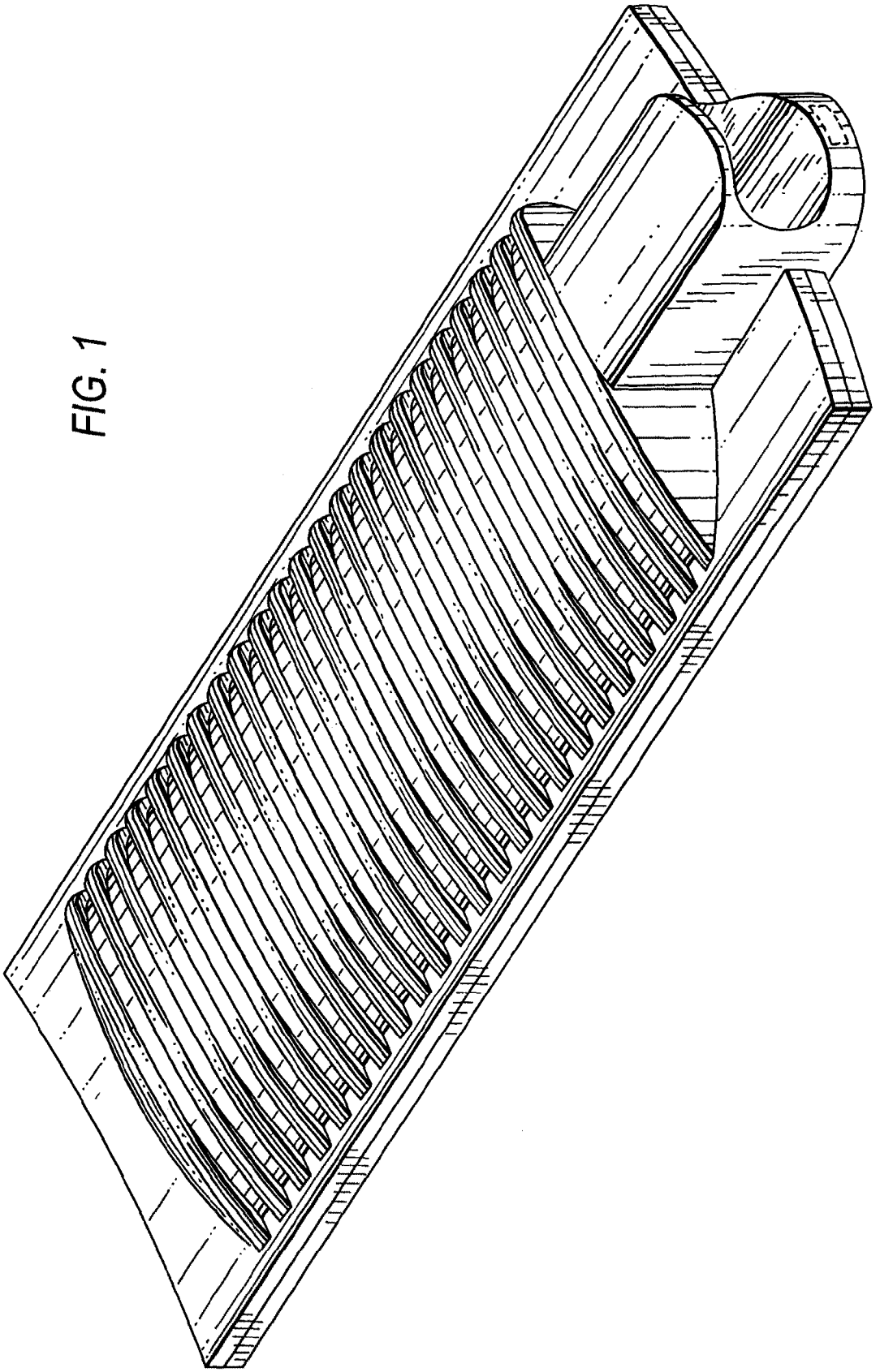

FIG. 1

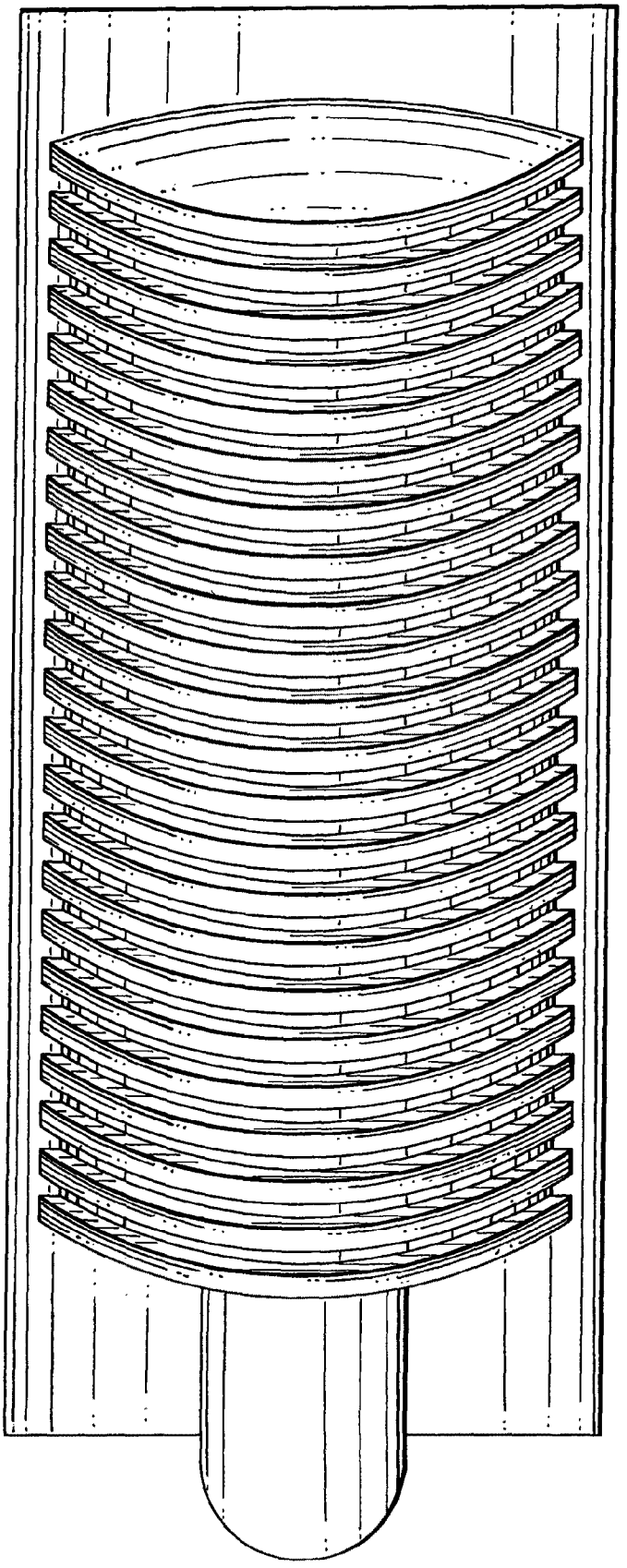

FIG. 2

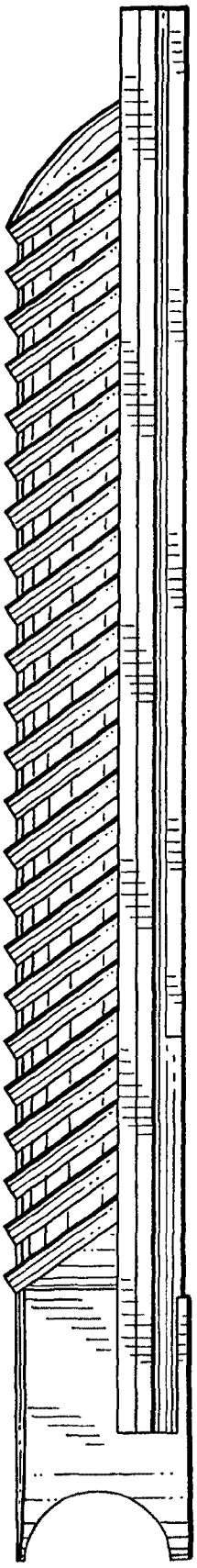

FIG. 3

FIG. 4

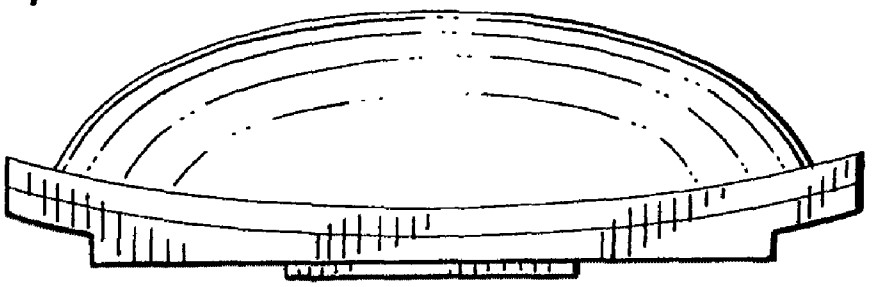

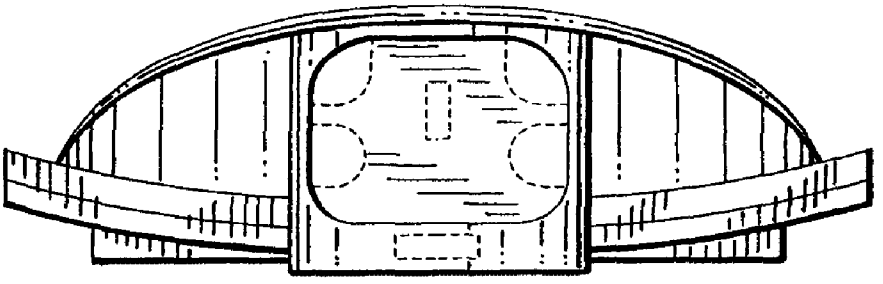

FIG. 5

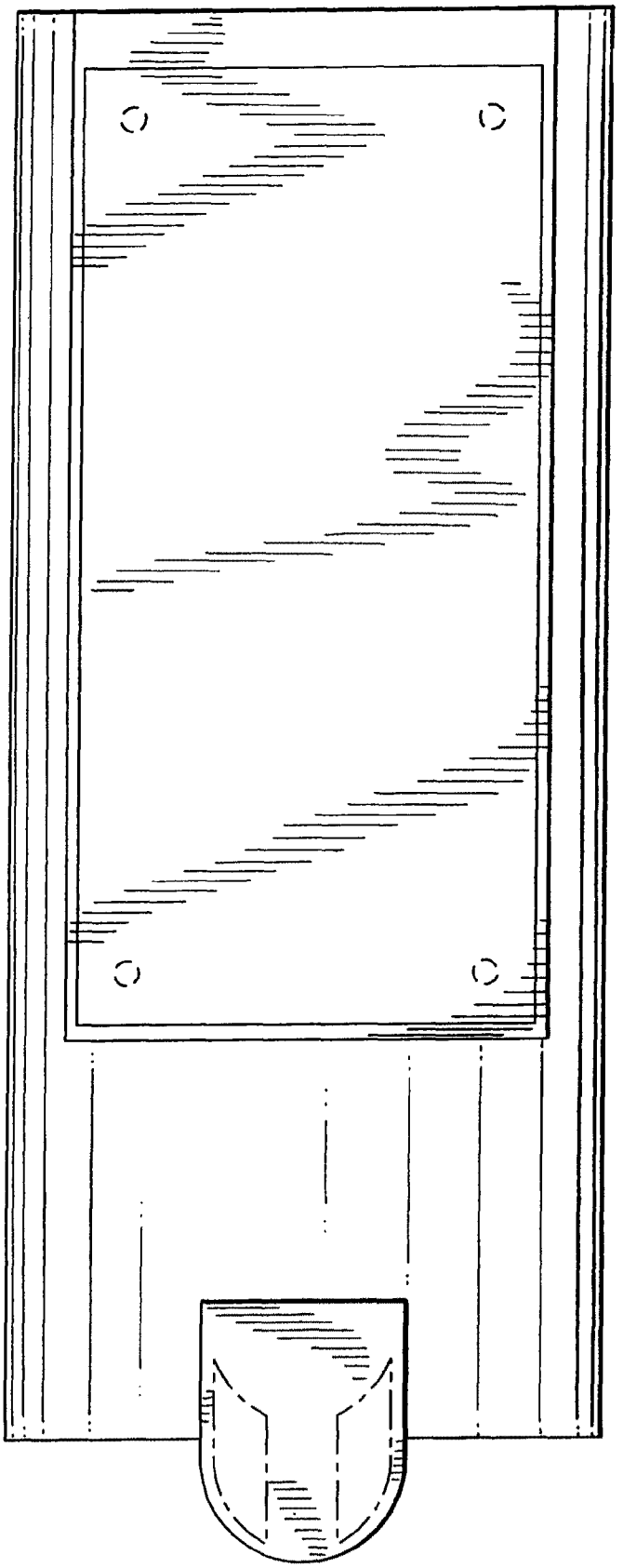

FIG. 6