OPIC
OFFICE DE LA PROPRIÉTÉ INTELLECTUELLE DU CANADA

CIPO
CANADIAN INTELLECTUAL PROPERTY OFFICE

(12) (19) (CA) **Demande-Application**

(21) (A1) **2,216,957**
(22) 1997/10/15
(43) 1998/04/16

(72) SEKIYA, Hiroaki, JP
(71) SEIKO INSTRUMENTS INC., JP

(51) Int.Cl.^{6} B41J 2/32
(30) 1996/10/16 (8-273785) JP

(54) **IMPRIMANTE**
(54) **PRINTER**

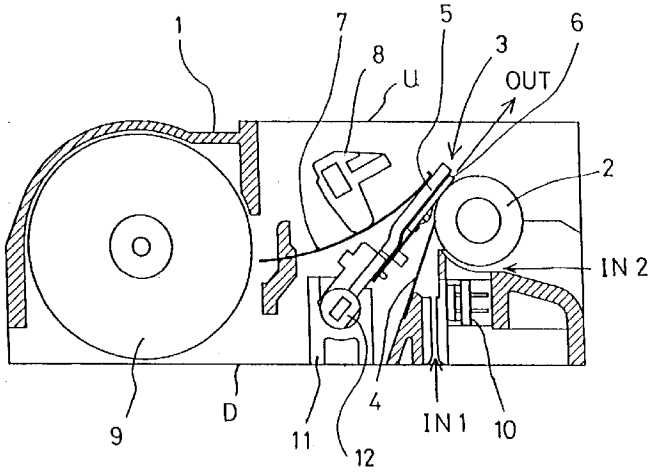

(57) Procédé simplifié d'assemblage d'une petite imprimante comportant une tête thermique et un cylindre incorporés dans un bâti. Un bâti (1) comprend une paire de parois formées le long des faces gauche et droite (L et R) et une base formée le long d'une face inférieure (D) pour le raccordement des parois latérales. Des portées (11) comportant des encoches (13), respectivement, sont formées intégralement à l'intérieur des parois se faisant face. Des arbres de soutien déformés (12) sont formés à chaque extrémité d'une tête thermique (3). Lorsque la tête thermique (3) tombe d'une ouverture de la face supérieure (U) du bâti (1) vers la face inférieure (D), les arbres de support (12) viennent en contact non permanent avec les portées correspondantes (11) par l'intermédiaire d'encoches (13). Après la prise de contact, la tête thermique (3) s'éloigne des portées tout en leur restant solidaire, autour des deux arbres de support (12), puis s'ouvre et se referme par rapport au cylindre (2).

(57) Assembly process of a small printer having a thermal head and a platen incorporated in a frame is simplified. A frame 1 comprises a pair of side wall portions formed along left and right faces L and R and a base portion formed along a bottom face D for connecting the side wall portions. Bearings 11 having notches 13, respectively, are integrally formed inside the side wall portions facing each other. Deformed support shafts 12 are formed at both ends of a thermal head 3. When the thermal head 3 is dropped from an opening in a top face U of the frame 1 toward the bottom face D, the support shafts 12 detachably engage with corresponding bearings 11 via the notches 13. After the engagement, the thermal head 3 swings undetachably from the bearings 11 about both of the support shafts 12, and opens and closes with respect to the platen 2.

ABSTRACT OF THE DISCLOSURE

Assembly process of a small printer having a thermal head and a platen incorporated in a frame is simplified. A frame 1 comprises a pair of side wall portions formed along left and right faces L and R and a base portion formed along a bottom face D for connecting the side wall portions. Bearings 11 having notches 13, respectively, are integrally formed inside the side wall portions facing each other. Deformed support shafts 12 are formed at both ends of a thermal head 3. When the thermal head 3 is dropped from an opening in a top face U of the frame 1 toward the bottom face D, the support shafts 12 detachably engage with corresponding bearings 11 via the notches 13. After the engagement, the thermal head 3 swings undetachably from the bearings 11 about both of the support shafts 12, and opens and closes with respect to the platen 2.

PRINTER

BACKGROUND OF THE INVENTION

The present invention relates to a printer for printing on recording paper, which comprises a platen and a head incorporated in a frame. More particularly, the present invention relates to a structure for incorporating a print head in a frame.

A general structure of a conventional printer is now described briefly in the following with reference to Fig. 2. As shown in Fig. 2A, a printer includes a platen 101 and a thermal head 102. The platen 101 is rotatably supported about an axis 101a along the width direction of recording paper (not shown). More specifically, a stepping motor 104 is connected with the axis 101a via a train of gears 103. The rotational motion of the stepping motor 104 is decelerated by the train of gears 103, and is transmitted to a rear axis 101a, and the platen 101 is appropriately intermittently rotated for feeding paper in the direction shown by an arrow in the figure. The thermal head 102 is disposed so as to face the platen 101 via recording paper. The thermal head 102 is swingably supported about an axis 105. In printing operation, a heater of the thermal head 102 is pressed against the recording paper. With this state maintained, the heater is electrically energized to print a line of letters on the recording paper. After the printing of the line, the platen 101 is rotated in the direction shown by the arrow to feed the recording paper.

Fig. 2B shows a schematic cross-sectional structure of the printer shown in Fig. 2A. The thermal head 102 is disposed so as to face the platen 101 via a recording paper 106. When the thermal head 102 is swung counterclockwise about the axis 105 that is in parallel with but different from the axis 101a of the platen 101, the heater above the axis 105 is pressed against the platen 101. In order to provide the pressing force, a spring member 107 intervenes between the thermal head 102 and a frame 108 of the printer. On the contrary, when the thermal head 102 is swung clockwise against the urging force by the spring member 107, the heater of the thermal head 102 is retracted from the platen 101.

Fig. 3 is a schematic side cross-section of a specific structural example of the printer shown in Fig. 2. A frame 108 is substantially in the shape of a rectangular parallelepiped having top, bottom, left, and right faces. In the figure, the top face, the bottom face, and the right face are represented as U, D, and R, respectively. It should be noted that the left face L is on the side opposite to the right face R. The platen 101 is rotatably, axially supported between the left and right faces L and R of the frame 108. The thermal head 102 is also axially supported between the left and right faces L and R of the frame 108, and openably swings with respect to the platen 101. Printing is carried out between the platen 101 and the thermal head 102 on recording paper (not shown) fed from the side of the bottom face D of the frame 108 and then the recording paper is discharged to the side of the top face U of the frame 108.

In the conventional structure shown in Fig. 3, a support shaft 105 penetrating both of the left and right faces L and R of the frame 108 supports both of end portions 102a (only one of them is shown in the figure) of the thermal head 102. Therefore, to incorporate the thermal head 102 into the frame 108, it is required that the support shaft 105 is first inserted from the right face R or the left face L of the frame 108, and a component for regulating the movement of the support shaft 105 in the thrust direction is then mounted. Subsequently, the thermal head 102 is incorporated from, for example, the top face U, and both of the end portions 102a of the thermal head 102 are engaged with the support shaft 105. In this way, in the conventional printer, assembly and disassembly of the thermal head 102 is bi-directional or tri-directional. More specifically, in order to mount the support shaft 105 and to engage the thermal head 102 with the support shaft 105, the operation has to be carried out from the right face R and/or the left face L and from the top face U of the frame 108. Further, when the thermal head 102 is removed in order to replace a component, for example, the support shaft 105 is required to be pulled out of the frame 108 in the thrust direction. Therefore, if a train of gears for deceleration and the like are disposed nearby, all of them must be removed.

Fig. 4 illustrates a conventional printer with its assembly improved, which is disclosed in Japanese Utility Model Application Laid-open No. Hei 7-5745. A frame 201 of a printer body rotatably, axially supports a platen 202. A heat sink 204 is provided for a

thermal head 203. A pressing component 205 presses the thermal head 203 held by the frame 201 to the side of the platen 202. Protrusions 206 and 206 are formed on the lower side of both longitudinal ends of the heat sink 204 of the thermal head 203. Bushes 207 and 207 are fitted onto the protrusions 206 and 206, respectively. The bushes 207 are D-shaped in section with one side of their outer periphery cut off, and are press fitted into the protrusions 206. Engagement holes 208 and 208, into which the bushes 207 and 207 are fitted, are formed on the lower side of both ends of the frame 201. The engagement holes 208 have insert grooves 208a on the lower side and holes 208b having a diameter permitting rotation of the D-shaped bushes 207 in section on the upper side. It should be noted that width of the insert grooves 208a is made smaller than the diameter of the D-shaped portions of the bushes 207 so that the bushes 207 may slide into the insert grooves 208a when the thermal head 203 is mounted to the frame 201 and the bushes 207 may be prevented from falling down when the mounted thermal head 203 is slanted to the side of the platen 202. In order to make a print face of the thermal head 203 closely contact the outer periphery of the platen 202, the holes 208b are made slightly larger than the bushes 207, thereby permitting the bushes 207 to rattle to some extent and preventing over-restriction. The pressing component 205 has in its front a spring member 209 for pressing the thermal head 203 mounted to the frame 201. Stopper portions 210 are formed at both ends of the pressing component 25. Holes 213, each of which is fitted onto protrusions 212 for positioning the frame 201 in a holder 211 at

its back, are formed. In this case, it is constructed that a head-up lever 214 releases the pressure of the thermal head 203 on the printing side, and the stopper portions 210 of the pressing component 205 are adapted to slide into receiving windows 215.

When the printer shown in Fig. 4 is assembled, the heat sink 204 of the thermal head 203 is inserted from the side of the bottom face of the frame 201. Furthermore, the bushes 207 and 207 are inserted into the insert grooves 208a and 208a of the respective engagement holes 208 and 208, and are slid upwardly. Under the state that the entire bushes 207 and 207 enter into the holes 208b and 208b, the thermal head 203 is slanted to the side of the platen 202. With this structure, the thermal head 203 is held by the frame 201 with the bushes 207 being prevented from falling down from the engagement holes 208. However, in this conventional printer, the thermal head 203 is incorporated into the frame from the side of the bottom face. Generally, in such a case that an automatic assembly is performed, the less the directions of incorporation of components are, the better it is. In addition, incorporation from the side of the top face is more preferable than that from the side of the bottom face. However, in the conventional printer shown in Fig. 4, the thermal head 203 has to be incorporated from the side of the bottom face, and thus, a process of reversing the frame 201 and the like have to be added, leading to a problem that the handling is complicated.

SUMMARY OF THE INVENTION

It is therefore an object of the present invention to simplify a process of assembly. In order to attain the above and other objects, the following measures are taken. That is, a printer according to the present invention comprises a frame, a platen, and a print head as a basic structure. The frame has top, bottom, left, and right faces and is substantially in the shape of a rectangular parallelepiped. The platen is rotatably axially supported between the left and right faces of the frame. The print head is also axially supported between the left and right faces of the frame, and openably swings with respect to the platen. With such a structure, printing is carried out on recording paper fed between the platen and the print head and then the recording paper is discharged to the side of the top face of the frame. The printer is characterized in that the frame comprises a pair of side wall portions formed along the left and right faces and a base portion formed along the bottom face for connecting the side wall portions with each other. Bearings having cutaways, respectively, are integrally formed inside the side wall portions facing each other. Deformed support shafts are formed at both ends of the print head. With such a structure, when the print head is dropped from an opening in the top face of the frame toward the bottom face, each of the support shafts detachably engages with the corresponding bearing via each of the notches. After the engagement, the print head swings undetachably from the bearings about both of the support shafts, and opens and closes with respect to the platen.

According to the present invention, bearings are formed integrally with the frame inside the side wall portions of the frame. The support shafts are formed at the both ends of the thermal head. The bearings have cutaways, and the support shafts are, for example, cut to be D-shaped in section. The thermal head is dropped from the top face of the frame, and can be detached from the frame only at a predetermined angle. With this structure, incorporation of the thermal head can be carried out from the side of the top face, and the assembly process can be more simplified compared with that of a conventional printer.

BRIEF DESCRIPTION OF THE DRAWINGS

Fig. 1A is a sectional view of a printer as a finished product according to the present invention;

Fig. 1B is a sectional view of the printer when being assembled according to the present invention;

Fig. 2A is a schematic view illustrating a general structure of a conventional printer;

Fig. 2B is a schematic sectional view illustrating the general structure of the conventional printer in Fig. 2A;

Fig. 3 is a schematic sectional view of a specific structural example of the conventional printer; and

Fig. 4 is an exploded perspective view of another example of the conventional printer.

DETAILED DESCRIPTION OF THE PREFERRED EMBODIMENTS

The best mode of the present invention is now described in detail in the following with reference to the drawings. Fig. 1 is a schematic sectional view of the best mode of a printer according to the present invention. Fig. 1A shows the printer as a finished product while Fig. 1B shows the printer when being assembled/disassembled. As shown in Fig. 1A, the printer basically comprises a frame 1, a platen 2, and a thermal head 3. It is to be noted that other kind of print head may be used instead of the thermal head 3. The frame 1 is in the shape of a box having a top face U, a bottom face D, a left face L, and a right face R (not shown). The platen 2 is rotatably, axially supported between the left and right faces L and R of the frame 1. Similarly, the thermal head 3 is also axially supported between the left and right faces L and R of the frame 1, and openably swings with respect to the platen 2. With such a structure, printing is carried out on recording paper (not shown) fed between the platen 2 and the thermal head 3 from the side of the bottom face D of the frame 1 and then the recording paper is discharged to the side of the top face U of the frame 1. In the figure, a supply port for recording paper formed in the bottom face D of the frame 1 is represented as IN1, and a discharge port positioned on the side of the top face U of the frame 1 is represented as OUT. A supply path from IN1 to OUT is referred to as a straight path. In this case, in order to prevent contact of recording paper with a circuit element mounted on the thermal head 3, a protective sheet 4 intervenes between the platen 2 and the thermal head 3. It is to be noted that, depending on the situation, recording paper

may be inserted from another supply port IN2 opening in the rear face of the frame 1 to be taken out from the discharge port OUT on the side of the top face U. A supply path from IN2 to OUT is referred to as a curled path. The thermal head 3 is formed by attaching a circuit substrate 6 made of ceramic or the like to a support body 5 formed of a metal plate or the like. A heater and a semiconductor device for driving the heater are formed on the circuit substrate 6. The thermal head 3 is pressed against the platen 2 by a plate spring 7. The pressing force of the plate spring 7 is provided by a pressure cam 8. Further, a stepping motor 9 for paper feed is incorporated in the frame 1. The stepping motor 9 is connected with the platen 2 via a decelerating train of gears (not shown) to drive the platen 2 to rotate. As the platen 2 rotates, the platen 2 feeds recording paper inserted from IN1 or IN2. It is to be noted that recording paper fed to the frame 1 is detected by a paper sensor 10. In the illustrated example, the paper sensor 10 monitors the straight path on the side of IN1.

The frame 1 comprises a pair of side wall portions formed along the left and right faces L and R and a base portion formed along the bottom face D for connecting the side wall portions with each other. Bearings having notches, respectively, are integrally formed inside the side wall portions facing each other. In the figure, only a bearing 11 formed inside the side wall portion on the side of the left face L is shown. On the other hand, deformed support shafts 12 are formed at both ends of the support body 5 forming the thermal head 3.

Next, assembly/disassembly operation of the printer shown in Fig. 1A is described with reference to Fig. 1B. When the thermal head 3 is dropped vertically from an opening in the top face U of the frame 1 toward the bottom face D, each of the support shafts 12 detachably engages with the corresponding bearing 11 via each of the notches 13. After the engagement, the thermal head 3 swings about both of the support shafts 12 without being detached from the bearings 11, and opens and closes so as to get away from and come in contact with the platen 2. More specifically, according to the present embodiment, the bearings 11 are formed integrally with the frame 1 inside the left and right side wall portions of the frame 1. For example, the frame 1 and the bearings 11 may be integrally formed by injection molding of a plastic material. On the other hand, the support shafts 12 are formed at the both ends 5a of the support body 5 forming the thermal head 3. In the figure, the support shafts 12 are injection molded, D-shaped in section, and press fit into protruding end portions 5a of the support body 5. The support shafts 12 are, for example, formed by injection molding of polyacetal. However, the present invention is not limited to the specific example, and the support shafts 12 may be integrally formed with the support body 5 of the thermal head 3 by die casting or the like. The bearings 11 on the side of the frame 1 have notches 13 opening upward, and the support shafts 12 on the side of the thermal head 3 are cut to be D-shaped in section. Accordingly, the thermal head 3 can be detached from the frame 1 only when held vertically as shown in the figure. Just by dropping the thermal head 3 vertically from the

top face U of the frame 1 and then rotating the thermal head 3 over predetermined degrees, the thermal head 3 can be swingably supported by the frame 1. Thus, assembly and disassembly of the thermal head 3 can be made to be unidirectional, i. e., only from the top face U.

As described in the above, according to the present invention, when the print head is dropped from the opening in the top face of the frame toward the bottom face, each of the support shafts detachably engages with the corresponding bearing via each of the notches. After the engagement, the print head swings undetachably from the bearings about both of the support shafts, and opens and closes with respect to the platen. With such a structure, assembly and disassembly of the print head can be made to be unidirectional, i. e., only from the top face of the frame, thereby simplifying the assembly process of the printer. Further, the number of components can be reduced compared with that of the conventional printer shown in Fig. 3.

What is claimed is:

1. A printer comprising: a frame having top, bottom, left, and right faces; a platen rotatably axially supported between said left and right faces of said frame; and a print head also axially supported between said left and right faces of said frame and openably swings with respect to said platen, for printing on recording paper fed between said platen and said print head and discharging the recording paper to the side of said top face of said frame, wherein:

said frame includes a pair of side wall portions formed along said left and right faces and a base portion formed along said bottom face for connecting both of said side wall portions with each other;

bearings having cutaways, respectively, are integrally formed inside both of said side wall portions facing each other; and

deformed support shafts are formed at both ends of said print head, and

when said print head is dropped from an opening in said top face of said frame toward said bottom face, each of said support shafts detachably engages with the corresponding bearing via each of said notches, and after the engagement, said print head swings undetachably from said bearings about both of said support shafts, and opens and closes with respect to said platen.

2. A printer comprising: a frame having top, bottom, left, and right faces; a platen rotatably axially supported between said

left and right faces of said frame; and a print head also axially supported between said left and right faces of said frame and openably swings with respect to said platen, for printing on recording paper fed between said platen and said print head,

said printer further comprising:

a base portion formed on said bottom face of said frame and provided with integrally formed bearings having cutaways; and

deformed support shafts formed on the rotation axis of said print head, wherein:

said support shafts detachably engage with said base portion via said cutaways provided for said bearings, and,

when said print head swings about said support shafts, said print head openably swings with respect to said platen without being detached from said bearings.

FIG. 1A

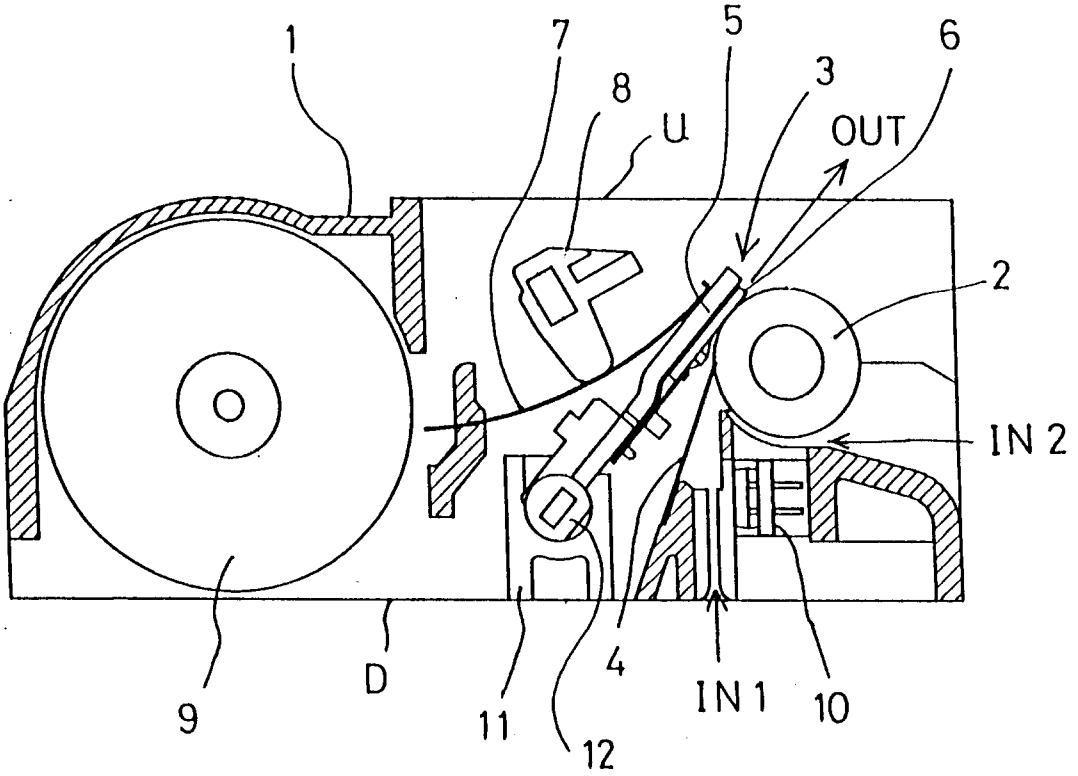

FIG. 1B

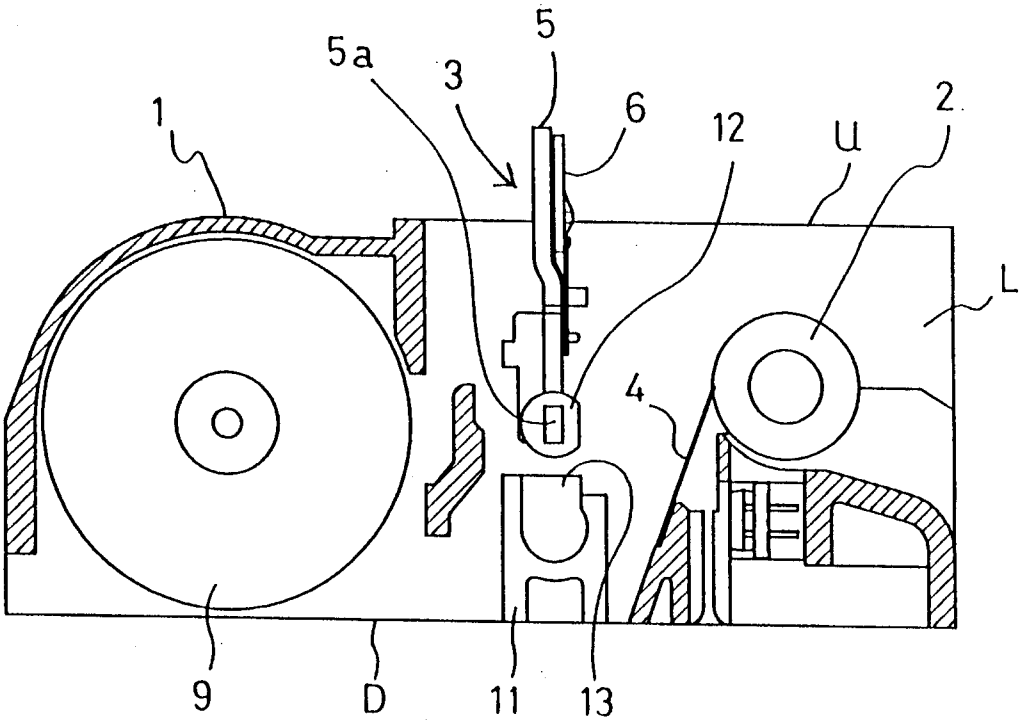

Scott & Aylen

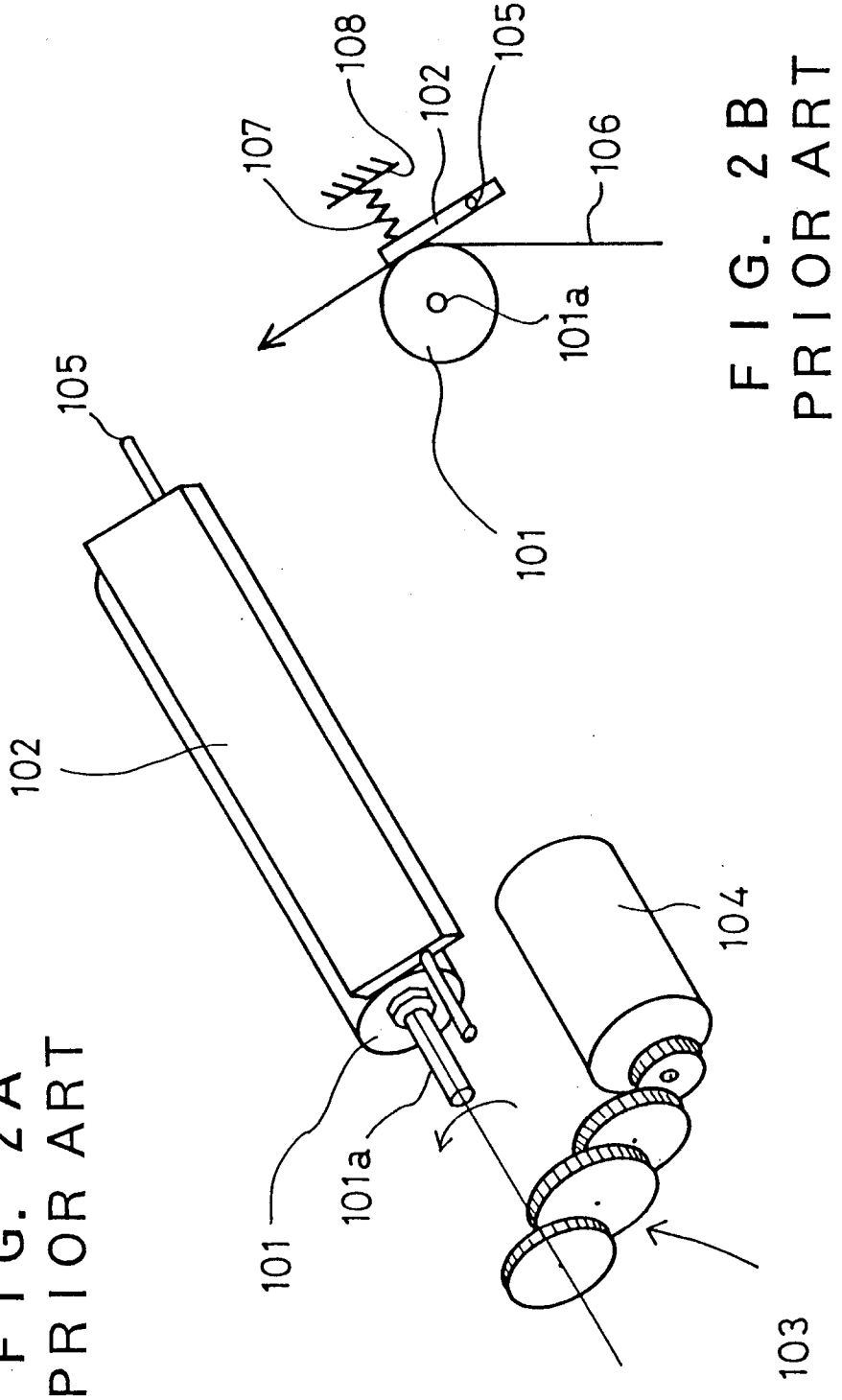

FIG. 2A
PRIOR ART

FIG. 2B
PRIOR ART

Scott & Aylen

FIG. 3
PRIOR ART

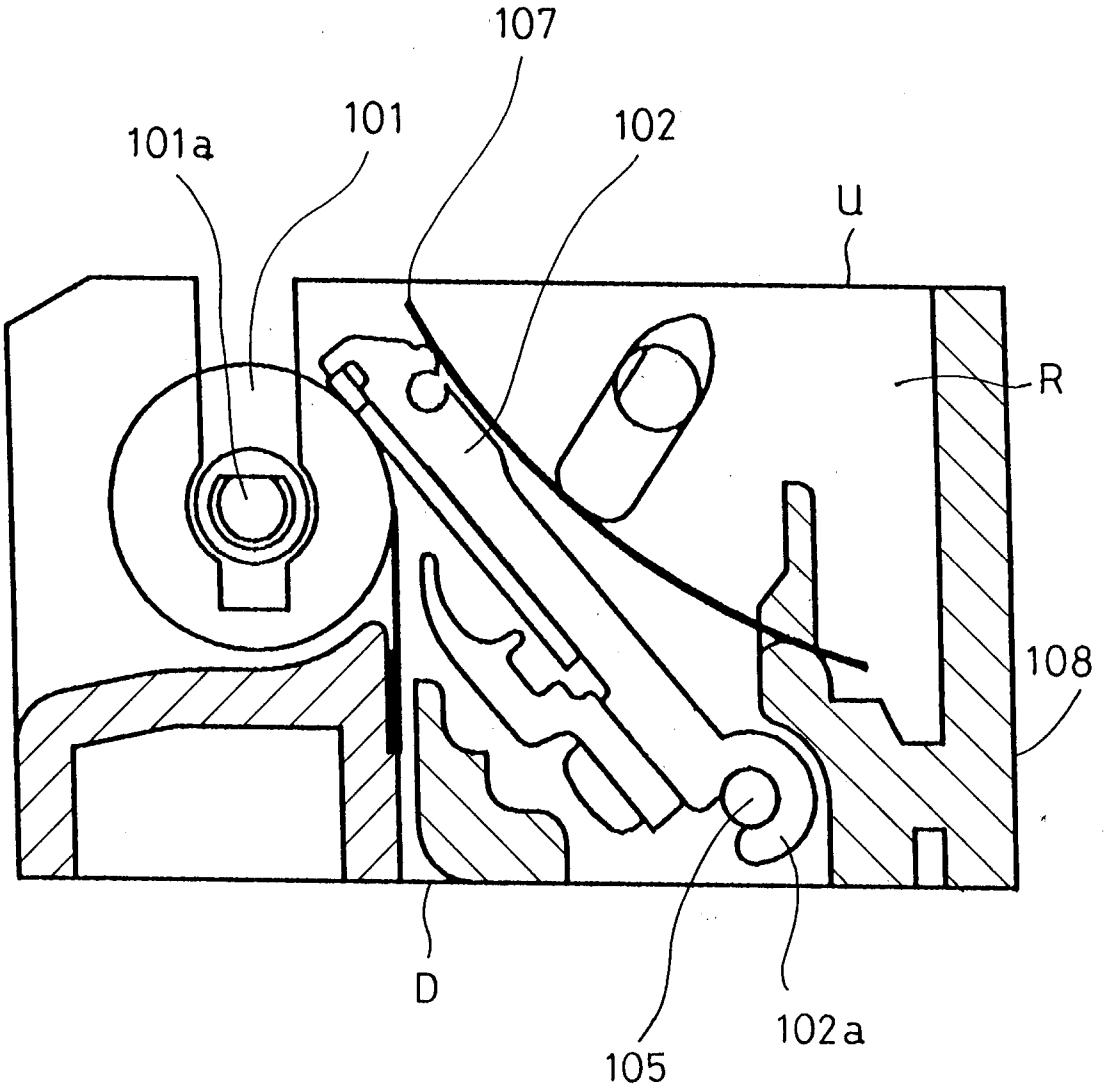

Scott & Aylen

FIG. 4
PRIOR ART

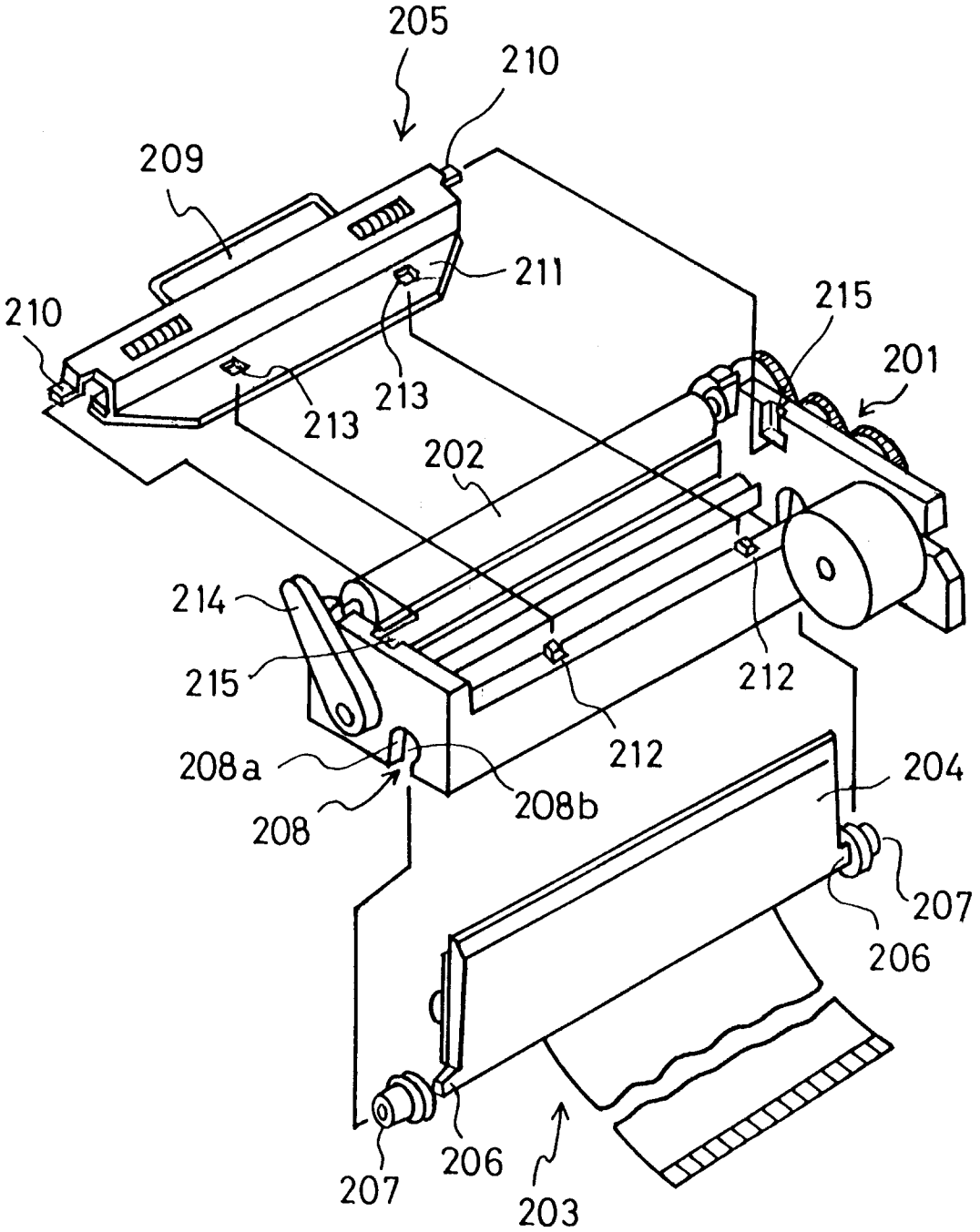

Scott & Aylen

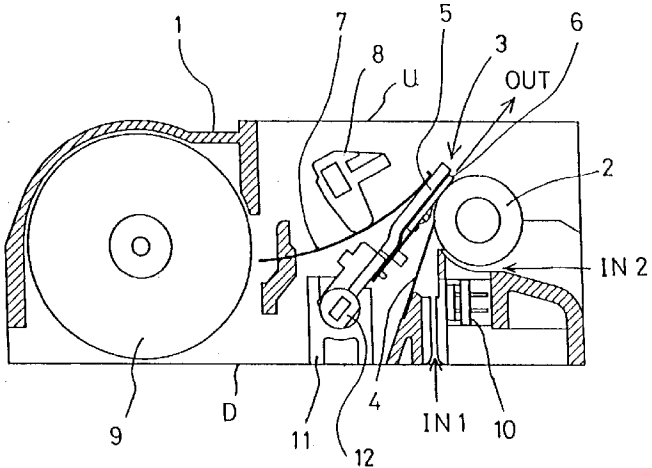
1
7
5
6
8
3
U
OUT
2
IN 2
9
D
11
12
4
IN 1
10