(12) INTERNATIONAL APPLICATION PUBLISHED UNDER THE PATENT COOPERATION TREATY (PCT)

(19) World Intellectual Property Organization
International Bureau

(43) International Publication Date
11 December 2014 (11.12.2014)

WIPO | PCT

(10) International Publication Number
WO 2014/195264 A1

(51) International Patent Classification:
B65D 75/58 (2006.01) *G09F 3/10* (2006.01)

(21) International Application Number:
PCT/EP2014/061366

(22) International Filing Date:
2 June 2014 (02.06.2014)

(25) Filing Language: English

(26) Publication Language: English

(30) Priority Data:
13170318.3 3 June 2013 (03.06.2013) EP

(71) Applicant: **PHILIP MORRIS PRODUCTS S.A.** [CH/CH]; Quai Jeanrenaud 3, CH-2000 Neuchâtel (CH).

(72) Inventor: **SERGEY, Ledermann**; Altmattweg 41, CH-4600 Olten (CH).

(74) Agent: **DOWLING, Ian**; Reddie & Grose LLP, 16 Theobalds Road, London, Greater London WC1X 8PL (GB).

(81) Designated States *(unless otherwise indicated, for every kind of national protection available)*: AE, AG, AL, AM, AO, AT, AU, AZ, BA, BB, BG, BH, BN, BR, BW, BY, BZ, CA, CH, CL, CN, CO, CR, CU, CZ, DE, DK, DM, DO, DZ, EC, EE, EG, ES, FI, GB, GD, GE, GH, GM, GT, HN, HR, HU, ID, IL, IN, IR, IS, JP, KE, KG, KN, KP, KR, KZ, LA, LC, LK, LR, LS, LT, LU, LY, MA, MD, ME, MG, MK, MN, MW, MX, MY, MZ, NA, NG, NI, NO, NZ, OM, PA, PE, PG, PH, PL, PT, QA, RO, RS, RU, RW, SA, SC, SD, SE, SG, SK, SL, SM, ST, SV, SY, TH, TJ, TM, TN, TR, TT, TZ, UA, UG, US, UZ, VC, VN, ZA, ZM, ZW.

(84) Designated States *(unless otherwise indicated, for every kind of regional protection available)*: ARIPO (BW, GH, GM, KE, LR, LS, MW, MZ, NA, RW, SD, SL, SZ, TZ, UG, ZM, ZW), Eurasian (AM, AZ, BY, KG, KZ, RU, TJ, TM), European (AL, AT, BE, BG, CH, CY, CZ, DE, DK, EE, ES, FI, FR, GB, GR, HR, HU, IE, IS, IT, LT, LU, LV, MC, MK, MT, NL, NO, PL, PT, RO, RS, SE, SI, SK, SM, TR), OAPI (BF, BJ, CF, CG, CI, CM, GA, GN, GQ, GW, KM, ML, MR, NE, SN, TD, TG).

Published:

— *with international search report (Art. 21(3))*

WO 2014/195264 A1

(54) Title: SHEET MATERIAL WITH TAB

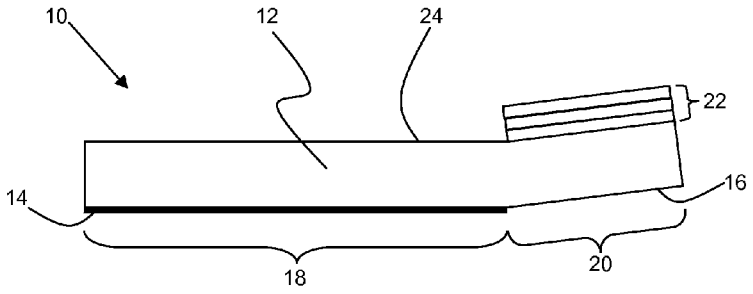

Figure 2

(57) Abstract: A sheet material comprises a sheet of substrate material (12) having a first surface (16) and a second surface (24). The substrate material (12) comprises a moveable portion (20) having a first edge connected to the remainder of the substrate material (12) and a second edge which is unconnected to the remainder of the substrate material (12). The moveable portion (20) is therefore moveable about the first edge. The sheet material further comprises at least one layer of a shrinkable material (22) provided on the moveable portion (20) of the substrate material (12).

SHEET MATERIAL WITH TAB

The present invention relates to a sheet material having a shrinkable material provided on a moveable portion of the sheet material. The present invention also relates to a method of forming a raised tab from the moveable portion of the sheet material.

It is often desirable to provide a sheet material which is removable or has a removable portion, particularly in the field of packaging. For example, it is often desirable to provide a consumer with product information using an adhesive label which is adhered to the product using a low-tack adhesive so that the label can be peeled off before using the product. In another example, it is often desirable to wrap consumer goods in a transparent outer wrapper to provide protection during transport of the consumer goods. Such outer wrappers may be provided with a removable portion in the form of a tear tape which facilitates removal of the outer wrapper by the consumer.

However, when trying to remove sheet materials such as adhesive labels or tear tapes it may be difficult for the consumer to grasp an edge of the sheet material. It would therefore be desirable to provide a sheet material which facilitates grasping of an edge of the sheet material by a consumer.

The present invention provides a sheet material comprising a sheet of substrate material having a first surface and a second surface. The substrate material comprises a moveable portion having a first edge connected to the remainder of the substrate material and a second edge which is unconnected to the remainder of the substrate material. The moveable portion is therefore moveable about the first edge. The sheet material further comprises at least one layer of a shrinkable material provided on the moveable portion of the substrate material.

The term “shrinkable material” is used herein to mean a material which undergoes a reduction in size in at least one dimension when energy is applied to the material.

By providing the substrate material with a movable portion having a shrinkable material thereon, a sheet material in accordance with the present invention can be treated to form a sheet material having a raised portion that advantageously facilitates removal of the sheet material or a portion thereof. Specifically, shrinking the shrinkable material will cause the moveable portion to bend towards the shrinkable material, therefore raising the moveable portion and making it easier for a consumer to grasp.

Use of a shrinkable material to form a raised portion of the sheet material provides a number of advantages. Firstly, forming a raised portion makes it easier for a consumer to grasp the sheet material for removing the sheet material or a part of the sheet material after it has been applied to a product or a container of consumer goods, for example. Furthermore, use of a shrinkable material facilitates formation of the raised portion after the sheet material has been applied to such products or containers of consumer goods. This advantageously prevents

damage to the raised portion by ensuring that all other processing operations have been completed before the raised portion is formed. Additionally, utilising a shrinkable material to impart a bend in the moveable portion of the sheet material eliminates the need for a crease line or a score line at the first edge of the moveable portion, which maintains the structural integrity of the sheet material at the first edge. This reduces the likelihood of separation of the moveable portion from the remainder of the sheet material when it is grasped, pulled or otherwise manipulated by the consumer. Using a shrinkable material also provides a "memory" effect, so that the moveable portion will always tend towards the raised position in the absence of any external force.

The shrinkable material may be any material that, upon application of energy, exhibits sufficient shrinkage to impart the desired lift to the moveable portion of the substrate material. Suitable materials include lacquers or inks that exhibit shrinkage when dried, and shrinkable polymeric tapes or films. For example, ultraviolet (UV) cured lacquers consist of a monomer and photo initiator in liquid state. By UV curing the monomer and photo initiator become a polymer with a volume reduction as compared to its liquid state. As another example, water-based or solvent based lacquers contain a binder and a solvent (water or organic solvents). The water or solvent evaporates when drying and only the binder stays on the surface leading again to volume reduction as compared to the liquid state. Where the shrinkable material is a shrinkable polymeric tape or film, the shrinkable material is preferably a unidirectional shrinkable material. Such a material can be oriented so that the moveable portion of the substrate material will lift in a single direction only. For example, where the moveable portion is an end portion of a tear tape of an outer wrapper, it may be desirable to orient the unidirectional shrinkable material so that the material shrinks only in the direction of the tear tape. This would lift the end portion of the tear tape in the same direction as the tear tape without causing the end portion to curl at the edges. Sheetlike shrinkable material may be one or a combination of polypropylene, polyethylene, polybutylene, polyethylene terephthalate, acetate, cellulose or paper.

The shrinkable material may shrink upon exposure to at least one of heat and electromagnetic radiation, such as infra-red radiation, visible light or ultraviolet radiation. The mechanism of shrinkage may vary depending on the particular shrinkable material used. For example, where the shrinkable material is applied as a liquid, such as an ink or a lacquer, the shrinkage may occur as a result of solvent evaporation as the liquid material is dried. Alternatively, where the shrinkable material is a tape or a film, the shrinkage may be a result of changes in the chemical bonds within the shrinkable material. For example, in the case of a unidirectional shrinkable polymeric film, the shrinkage may result from relaxation of the molecules within the polymeric film from an aligned state to an amorphous state, when the film is exposed to heat. In some embodiments, the substrate is also made from a material that

exhibits shrinkage, for example a heat shrinkable polymer film like oriented polypropylene. In such embodiments, the shrinkage of the shrinkable material exceeds the shrinkage of the substrate material.

The shrinkable material may be applied to the moveable portion as a single layer or as multiple at least partially overlaying layers. In those embodiments in which the shrinkable material comprises a lacquer or an ink, the material is preferably deposited in at least three at least partially overlaying layers. Preferably, each subsequent layer is partially dried before the next layer is deposited. Depositing a liquid shrinkable material in this manner allows greater control over the thickness of the shrinkable material. It also may prevent bleeding of the liquid shrinkable material onto the remainder of the substrate material.

To ensure that the desired lift of the moveable portion of the substrate material is obtained, it is necessary to use a sufficient amount of the shrinkable material to provide the required bending force. Therefore, the shrinkable material preferably has a basis weight of at least about 15 grams per square metre (gsm), more preferably at least about 20 gsm. The basis weight of the shrinkable material is preferably less than about 100 gsm. Where the shrinkable material comprises multiple layers as described above, the basis weight figures apply to the total basis weight of the combined layers of shrinkable material.

As discussed above, the sheet material according to the present invention may be used to form an adhesive label. In such embodiments, the sheet material further comprises an adhesive provided on the first surface of the substrate material. Preferably, the adhesive is provided only on the remainder of the substrate material so that the moveable portion is free from adhesive. In this embodiment the shrinkable material is provided on the second surface on the movable portion. Therefore, when the adhesive label is secured to a surface using the adhesive portion of the label, the shrinkable material on the moveable portion raises the moveable portion away from the surface to which the label is secured. Thus, the raised moveable portion provides a raised tab which a consumer can more easily grasp to remove the label. The adhesive may be a low-tack adhesive so that the label can be removed without damaging the underlying surface. Alternatively, the adhesive may be a high-tack adhesive so that removing the label will damage the surface to which the label is adhered, or leave a portion of the label adhered to the surface, or both. Such high-tack labels find particular use as tamper-evident seals on packaging for consumer goods.

As described in detail above, the moveable portion of a sheet material according to the present invention can be formed into a raised tab by shrinking the shrinkable material. The present invention encompasses such methods, and therefore the present invention also provides a method of creating a raised tab in a sheet material. The method comprises providing a sheet material comprising a sheet of substrate material having a first surface and a second surface. The substrate material comprises a moveable portion having a first edge connected to

the remainder of the substrate material and a second edge which is unconnected to the remainder of the substrate material. Thus, the moveable portion is moveable about the first edge. The sheet material further comprises at least one layer of a shrinkable material provided on the moveable portion of the substrate material. The method further comprises a step of shrinking the shrinkable material so that the moveable portion of the substrate material is raised and forms a raised tab.

The method of creating a raised tab in a sheet material can be applied to a sheet material according to any of the embodiments of the present invention, as discussed above. In particular, the method is applicable to sheet materials including any of the shrinkable materials described above, including lacquers, inks, tapes and films. The shrinkable material may be a unidirectional shrinkable material. The shrinkable material may comprise a single layer of shrinkable material or multiple layers, as described above.

The total basis weight of the one or more layers of shrinkable material is preferably at least about 15 grams per square metre (gsm), more preferably at least about 20 gsm. The total basis weight of the one or more layers of shrinkable material is preferably less than about 100 gsm.

The shrinking step preferably reduces a dimension of the shrinkable material between about 2 percent and about 80 percent, preferably, between about 3 percent and about 40 percent of the same dimension of the shrinkable material before the shrinking step, more preferably, the shrinking step preferably reduces a dimension of the shrinkable material between about 5 percent and about 15 percent of the same dimension of the shrinkable material before the shrinking step. For example, where the sheet material forms a tear tape having a layer of a unidirectional shrinkable material applied to an end portion of the tear tape, the shrinking step preferably reduces the length of the layer of shrinkable material in the direction of the tear tape by between about 2 percent and about 25 percent of the length of the layer of shrinkable material prior to the shrinking step.

The shrinking step may comprise exposing the shrinkable material to at least one of heat and electromagnetic radiation, such as infra-red radiation, visible light or ultraviolet radiation.

In addition to the sheet material and the method described above, the present invention also encompasses the use of a shrinkable material to form a raised tab in a sheet material.

According to a further aspect, the invention is also directed to a container comprising a sheet material comprising a sheet of substrate material having a first surface and a second surface, the substrate material comprising a moveable portion having a first edge connected to the remainder of the substrate material and a second edge which is unconnected to the remainder of the substrate material so that the moveable portion is moveable about the first edge; and at least one layer of a shrinkable material provided on the moveable portion of the substrate material.

The invention will now be further described, by way of example only, with reference to the accompanying drawings in which:

Figure 1 shows a cross-sectional view of a sheet material in accordance with an embodiment of the present invention;

Figure 2 shows a cross-sectional view of the sheet material of Figure 1, after a shrinking step.

Figure 1 shows a sheet material in accordance with an embodiment of the present invention. The sheet material is an adhesive label 10 comprising a sheet of substrate material 12 formed from a polymeric film, such as polyethylene, polypropylene, PET, cellulose or acetate. A layer of adhesive 14 is applied to a portion of a first surface 16 of the substrate material 12 to define an adhesive portion 18 of the adhesive label 10. The remainder of the first surface 16 of the substrate material 12 is free from adhesive so as to define a non-adhesive moveable portion 20 of the adhesive label 10.

Three stacked layers of a heat shrinkable lacquer 22 are provided on a second surface 24 of the substrate material 12, so that the heat shrinkable lacquer overlies only the non-adhesive moveable portion 20 of the adhesive label 10. Each layer of the heat shrinkable lacquer has a basis weight of about 8 gsm, so that the total basis weight of the heat shrinkable lacquer is at least 24 gsm.

Figure 2 shows the adhesive label 10 from Figure 1 after exposure to a heat treatment step. The heat treatment step has caused the layers of heat shrinkable lacquer 22 to shrink, which has contracted the second surface 24 of the non-adhesive moveable portion 20 relative to the first surface 16 of the non-adhesive moveable portion 20. The contraction of the second surface 24 results in the non-adhesive moveable portion 20 being raised to form a raised tab. While the raised non-adhesive moveable portion 20 is shown straight in the drawing, alternatively, the non-adhesive moveable portion 20 may exhibit a curved cross section instead.

Claims

1. A sheet material comprising:

a sheet of substrate material having a first surface and a second surface, the substrate material comprising a moveable portion having a first edge connected to the remainder of the substrate material and a second edge which is unconnected to the remainder of the substrate material so that the moveable portion is moveable about the first edge; and

at least one layer of a shrinkable material provided on the moveable portion of the substrate material.

2. A sheet material according to claim 1, wherein the shrinkable material comprises a lacquer, an ink, a tape or a film.

3. A sheet material according to claim 1 or 2, wherein the at least one layer of shrinkable material comprises a plurality of layers of shrinkable material.

4. A sheet material according to any preceding claim, wherein the at least one layer of shrinkable material has a total basis weight of between about 15 grams per square metre (gsm) and about 100 grams per square metre (gsm).

5. A sheet material according to any preceding claim, wherein the shrinkable material shrinks when exposed to at least one of heat and electromagnetic radiation.

6. A sheet material according to any preceding claim, wherein the shrinkable material is a unidirectional shrinkable material.

7. A sheet material according to any preceding claim, wherein the sheet material is an adhesive label, the sheet material comprising an adhesive provided on the first surface of the substrate material, wherein the adhesive is provided only on the remainder of the substrate material so that the moveable portion is free from adhesive, and wherein the shrinkable material is provided on the second surface on the movable portion.

8. A method of creating a raised tab in a sheet material, the method comprising:

providing a sheet material comprising:

a sheet of substrate material having a first surface and a second surface, the substrate material comprising a moveable portion having a first edge connected to the remainder of the substrate material and a second edge which is unconnected to the

remainder of the substrate material so that the moveable portion is moveable about the first edge; and

at least one layer of a shrinkable material provided on the moveable portion of the substrate material; and

shrinking the shrinkable material so that the moveable portion of the substrate material is raised and forms a raised tab.

9. A method according to claim 8, wherein the shrinkable material comprises a lacquer, an ink, a tape or a film.

10. A method according to claim 8 or 9, wherein the at least one layer of shrinkable material comprises a plurality of layers of shrinkable material.

11. A method according to claim 8, 9 or 10, wherein the at least one layer of shrinkable material has a total basis weight of between about 15 grams per square metre (gsm) and about 100 grams per square metre (gsm).

12. A method according to any of claims 8 to 11, wherein the shrinking step comprises exposing the shrinkable material to at least one of heat and electromagnetic radiation.

13. A method according to any of claims 8 to 12, wherein the shrinkable material is a unidirectional shrinkable material.

14. A method according to any of claims 8 to 13, wherein the shrinking step reduces a dimension of the shrinkable material by about 2 percent and about 25 percent of the same dimension of the shrinkable material before the shrinking step.

15. Container comprising a sheet material comprising:

a sheet of substrate material having a first surface and a second surface, the substrate material comprising a moveable portion having a first edge connected to the remainder of the substrate material and a second edge which is unconnected to the remainder of the substrate material so that the moveable portion is moveable about the first edge; and

at least one layer of a shrinkable material provided on the moveable portion of the substrate material.

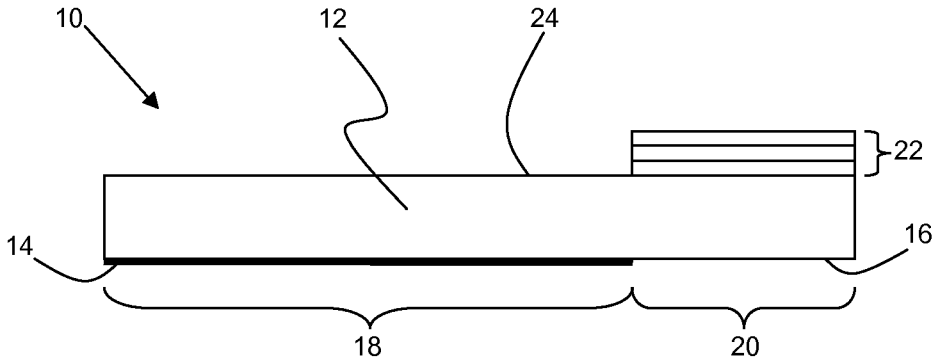

Figure 1

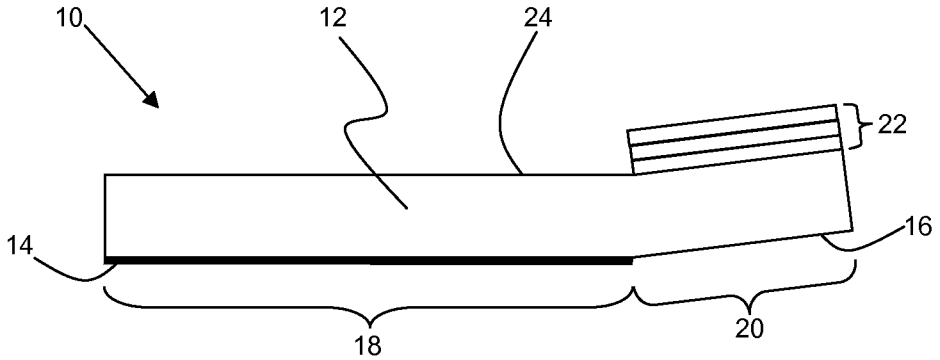

Figure 2

INTERNATIONAL SEARCH REPORT

International application No
PCT/EP2014/061366

A. CLASSIFICATION OF SUBJECT MATTER
INV. B65D75/58 G09F3/10
ADD.

According to International Patent Classification (IPC) or to both national classification and IPC

B. FIELDS SEARCHED

Minimum documentation searched (classification system followed by classification symbols)
B65D G09F B32B

Documentation searched other than minimum documentation to the extent that such documents are included in the fields searched

Electronic data base consulted during the international search (name of data base and, where practicable, search terms used)
EPO-Internal, WPI Data

C. DOCUMENTS CONSIDERED TO BE RELEVANT

Category*	Citation of document, with indication, where appropriate, of the relevant passages	Relevant to claim No.
A	WO 96/39330 A1 (GRACE W R & CO [US]) 12 December 1996 (1996-12-12) page 6, lines 18-28; figures 1-4	1-15
A	US 5 779 050 A (KOCHER PATRICK N [US] ET AL) 14 July 1998 (1998-07-14) abstract column 8, line 4 - column 9, line 9 column 19, lines 43-64; figures 1-11	1,8,15
A	US 2011/052846 A1 (HIKIDA EIJI [JP] ET AL) 3 March 2011 (2011-03-03) paragraphs [0014] - [0016], [0048]; figure 2	1,8,15

-/--

[X] Further documents are listed in the continuation of Box C.

[X] See patent family annex.

* Special categories of cited documents :

"A" document defining the general state of the art which is not considered to be of particular relevance

"E" earlier application or patent but published on or after the international filing date

"L" document which may throw doubts on priority claim(s) or which is cited to establish the publication date of another citation or other special reason (as specified)

"O" document referring to an oral disclosure, use, exhibition or other means

"P" document published prior to the international filing date but later than the priority date claimed

"T" later document published after the international filing date or priority date and not in conflict with the application but cited to understand the principle or theory underlying the invention

"X" document of particular relevance; the claimed invention cannot be considered novel or cannot be considered to involve an inventive step when the document is taken alone

"Y" document of particular relevance; the claimed invention cannot be considered to involve an inventive step when the document is combined with one or more other such documents, such combination being obvious to a person skilled in the art

"&" document member of the same patent family

Date of the actual completion of the international search	Date of mailing of the international search report
4 August 2014	20/08/2014

Name and mailing address of the ISA/	Authorized officer
European Patent Office, P.B. 5818 Patentlaan 2 NL - 2280 HV Rijswijk Tel. (+31-70) 340-2040, Fax: (+31-70) 340-3016	Leijten, René

1

Form PCT/ISA/210 (second sheet) (April 2005)

INTERNATIONAL SEARCH REPORT

International application No
PCT/EP2014/061366

C(Continuation). DOCUMENTS CONSIDERED TO BE RELEVANT

Category*	Citation of document, with indication, where appropriate, of the relevant passages	Relevant to claim No.
A	WO 2012/064544 A1 (QUALITY ASSURED ENTPR INC [US]; FRANKO JOSEPH D JR [US]) 18 May 2012 (2012-05-18) page 15, lines 9-15 page 22, line 19 - page 23, line 3; figures 1,8	1,8,15
A	US 2007/090012 A1 (FRESNEL ERIC [FR]) 26 April 2007 (2007-04-26) paragraphs [0010], [0036] - [0063]; figures 1-15	1,8,15
A	EP 0 745 539 A1 (GRACE SA [FR] CRYOVAC INC [US]) 4 December 1996 (1996-12-04) column 2, line 40 - column 4, line 13; figures 1-6	1,8,15
A	EP 2 017 810 A1 (SANTIAGO VALVERDE SAVASA IMPRE [ES] SANTIAGO VALVERDE SAVASA IMPRESORE) 21 January 2009 (2009-01-21) abstract paragraphs [0014] - [0016]; figures 1-4	1,8,15

1

INTERNATIONAL SEARCH REPORT

Information on patent family members

International application No
PCT/EP2014/061366

Patent document cited in search report	Publication date	Patent family member(s)	Publication date
WO 9639330 A1	12-12-1996	AR 002391 A1	11-03-1998
		AT 188182 T	15-01-2000
		AU 698678 B2	05-11-1998
		BR 9608927 A	15-06-1999
		CA 2221344 A1	12-12-1996
		DE 69605914 D1	03-02-2000
		DE 69605914 T2	04-05-2000
		DK 0830289 T3	01-05-2000
		EP 0830289 A1	25-03-1998
		ES 2142067 T3	01-04-2000
		JP 4026725 B2	26-12-2007
		JP H11507311 A	29-06-1999
		NZ 311293 A	26-08-1998
		US 5591468 A	07-01-1997
		WO 9639330 A1	12-12-1996
US 5779050 A	14-07-1998	AR 012555 A1	08-11-2000
		AT 225298 T	15-10-2002
		AU 733753 B2	24-05-2001
		AU 6695498 A	29-09-1998
		CA 2283254 A1	17-09-1998
		DE 69808493 D1	07-11-2002
		DE 69808493 T2	20-03-2003
		DK 1007440 T3	27-01-2003
		EP 1007440 A1	14-06-2000
		ES 2182278 T3	01-03-2003
		NZ 337582 A	22-12-2000
		US 5779050 A	14-07-1998
		US 6042862 A	28-03-2000
		WO 9840287 A1	17-09-1998
US 2011052846 A1	03-03-2011	JP 5478758 B2	23-04-2014
		JP 2013156659 A	15-08-2013
		US 2011052846 A1	03-03-2011
		WO 2009096274 A1	06-08-2009
WO 2012064544 A1	18-05-2012	EP 2638538 A1	18-09-2013
		US 2014000781 A1	02-01-2014
		WO 2012064544 A1	18-05-2012
US 2007090012 A1	26-04-2007	AR 060311 A1	11-06-2008
		AT 414020 T	15-11-2008
		BR PI0604306 A	21-08-2007
		CA 2565116 A1	25-04-2007
		CN 1955078 A	02-05-2007
		DK 1780135 T3	09-03-2009
		EP 1780135 A1	02-05-2007
		ES 2317469 T3	16-04-2009
		FR 2892392 A1	27-04-2007
		HK 1099266 A1	24-12-2010
		PT 1780135 E	30-01-2009
		RU 2353001 C2	20-04-2009
		SI 1780135 T1	30-04-2009
		US 2007090012 A1	26-04-2007
EP 0745539 A1	04-12-1996	BR 9602512 A	08-09-1998
		CA 2177557 A1	30-11-1996
		DE 69618714 D1	14-03-2002

INTERNATIONAL SEARCH REPORT

Information on patent family members

International application No
PCT/EP2014/061366

Patent document cited in search report	Publication date	Patent family member(s)	Publication date
		DE 69618714 T2	13-06-2002
		EP 0745539 A1	04-12-1996
		FR 2734792 A1	06-12-1996
EP 2017810 A1	21-01-2009	BR PI0621504 A2	10-05-2011
		EP 2017810 A1	21-01-2009
		US 2009158632 A1	25-06-2009
		WO 2007128846 A1	15-11-2007