(12) INTERNATIONAL APPLICATION PUBLISHED UNDER THE PATENT COOPERATION TREATY (PCT)

(19) World Intellectual Property Organization
International Bureau

(43) International Publication Date
7 November 2002 (07.11.2002)

PCT

(10) International Publication Number
WO 02/089321 A1

(51) International Patent Classification[7]: H03F 3/217

(21) International Application Number: PCT/GB02/01815

(22) International Filing Date: 22 April 2002 (22.04.2002)

(25) Filing Language: English

(26) Publication Language: English

(30) Priority Data:
0110340.7 27 April 2001 (27.04.2001) GB

(71) Applicants and
(72) Inventors: **WATTS, Robert, David** [GB/GB]; 2 Brooklea, Caerleon, Newport NP18 3PR (GB). **WESTLAKE, John, Alexander** [GB/FR]; 66, rue Pierre Demours, F-75017 Paris (FR).

(74) Agent: **HOLMES, Matthew, Peter**; Marks & Clerk, Sussex House, 83-85 Mosley Street, Manchester M2 3LG (GB).

(81) Designated States *(national)*: AE, AG, AL, AM, AT, AU, AZ, BA, BB, BG, BR, BY, BZ, CA, CH, CN, CO, CR, CU, CZ, DE, DK, DM, DZ, EC, EE, ES, FI, GB, GD, GE, GH, GM, HR, HU, ID, IL, IN, IS, JP, KE, KG, KP, KR, KZ, LC, LK, LR, LS, LT, LU, LV, MA, MD, MG, MK, MN, MW, MX, MZ, NO, NZ, OM, PH, PL, PT, RO, RU, SD, SE, SG, SI, SK, SL, TJ, TM, TN, TR, TT, TZ, UA, UG, US, UZ, VN, YU, ZA, ZM, ZW.

(84) Designated States *(regional)*: ARIPO patent (GH, GM, KE, LS, MW, MZ, SD, SL, SZ, TZ, UG, ZM, ZW), Eurasian patent (AM, AZ, BY, KG, KZ, MD, RU, TJ, TM), European patent (AT, BE, CH, CY, DE, DK, ES, FI, FR, GB, GR, IE, IT, LU, MC, NL, PT, SE, TR), OAPI patent (BF, BJ, CF, CG, CI, CM, GA, GN, GQ, GW, ML, MR, NE, SN, TD, TG).

Published:
— *with international search report*
— *before the expiration of the time limit for amending the claims and to be republished in the event of receipt of amendments*

For two-letter codes and other abbreviations, refer to the "Guidance Notes on Codes and Abbreviations" appearing at the beginning of each regular issue of the PCT Gazette.

(54) Title: A SIGNAL PROCESSING CIRCUIT

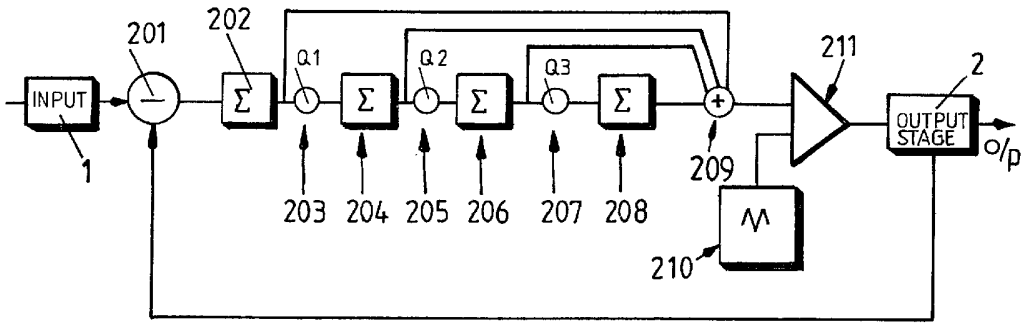

(57) Abstract: A signal processing circuit comprises a difference stage for receiving an input signal to be processed and a feedback signal taken from an output signal of the circuit. The difference stage generates a difference signal corresponding to the difference between the input and feedback signal. An integrator stage is coupled to the difference stage to receive the difference signal and output an integrated signal. A time continuous pulse width modulating stage is coupled to the integrator stage to receive the integrated signal and to modulate the signal with reference to a continuously varying carrier signal. A continuous time feedback path is coupled to the output of the modulating stage and an input of the difference stage. The integrator stage comprises at least two integrators to provide second or higher order integration.

WO 02/089321 A1

A SIGNAL PROCESSING CIRCUIT

The present invention relates to a signal processing circuit. Particularly, but not exclusively, the invention relates to an amplifier circuit such as an audio power amplifier.

Audio power amplifier systems have traditionally used linear (class A or class AB) amplifiers. Linear amplifiers are, however, inherently inefficient. Heat dissipation and power supply requirements of linear amplifiers can be particularly problematical in modern electronic consumer products such as personal computers and multi-media systems. This has lead to the development of various alternative approaches to audio amplification.

One such approach is the "switching", or Class-D, amplifier. Essentially, Class-D amplifiers work by varying the duty cycle of a pulse width modulated (PWM) signal. A Class-D amplifier essentially comprises a continuous time pulse width modulator coupled between audio input and power output stages. The pulse width modulator comprises a comparator which receives the input audio signal and a reference carrier signal which continuously varies at the desired switching frequency (typically ten times the highest frequency of the desired audio output).

The reference signal can be any periodic signal but is usually a continuous triangular wave (typically plus or minus 5 volts). The output of the modulator is a rapidly switching square wave which is fed to the output stage. The output stage transistors (typically power mosfets in a H-bridge configuration) therefore operate the majority of the time either fully on or fully off (ideally never operating in mid-conduction) which reduces power dissipation and increases efficiency. The resulting output signal is a rapidly switching square wave with a duty cycle proportional to the amplitude of the input audio signal. This may then be supplied to a speaker, via an output filter circuit if appropriate.

Conventional class D amplifiers have very high efficiency but relatively poor distortion and noise performance and thus relatively poor sound quality.

An alternative type of amplifier with improved performance is the delta-sigma amplifier. A delta-sigma amplifier may have an output stage identical to that of a conventional Class-D amplifier but differs in that delta-sigma modulation is used

rather than time continuous pulse width modulation. In particular, a feedback structure, conventional in delta-sigma modulators, is used to improve performance. Thus, a typical delta-sigma amplifier comprises a time quantised comparator with a feedback path from the comparator output to a subtractor at which the output is compared to the audio input. The output of the subtractor is supplied to an integrator stage the output of which is input into the comparator. The integrator integrates the error voltage so that the system constantly minimises the error by adjusting the output data stream.

A simple first order delta-sigma modulator comprises a single integrator. It is however known to improve the performance of a delta-sigma modulator by using more than one integrator but such higher order modulators can become difficult to stabilise. In particular, the tap coefficients needed to stabilise an nth order delta-sigma modulator reduce the effectiveness of the feedback so that little benefit is gained by employing great than 4th order.

Although improving on the performance of conventional Class-D amplifiers, delta-sigma amplifiers nevertheless suffer from significant distortion and noise, principally due to the time sampling of the quantiser.

A Class-D amplifier with a feedback loop similar to that of a delta-sigma amplifier has been proposed. Essentially this employs a first order integration stage which outputs to a time continuous pulse width modulator.

It is an object of the present invention to provide a power amplifier circuit with reduced distortion and noise compared with conventional amplifier circuits. The invention is not, however, limited to power amplifier circuits. It is thus a more general object of the present invention to provide a signal processing circuit with improved noise and distortion performance. According to the present invention there is provided a signal processing circuit comprising:

- a difference stage for receiving an input signal to be processed and a feedback signal taken from an output signal of the circuit, the difference stage generating a difference signal corresponding to the difference between the input and feedback signal;
- an integrator stage coupled to said difference stage to receive said difference signal and outputting an integrated signal;

- a time continuous pulse width modulating stage coupled to the the integrator stage to receive the integrated signal and to modulate said signal with reference to a continuously varying carrier signal; and
- a continuous time feedback path coupled to the output of the modulating stage and an input of the difference stage;
- wherein the integrator stage comprises at least two integrators to provide second or higher order integration .

The provision of second or higher order feedback significantly improves performance by reducing noise and distortion to negligible levels as is discussed further below.

Preferred embodiments of the invention take advantage of the high feedback levels by utilising a spread spectrum carrier signal to reduce the effect of electromagnetic emissions.

This aspect of the invention combines the inherent linearity of a continuous time PWM modulator, and the very high level of corrective feedback offered by the integrator stage, to correct for any system errors including, but not limited to, - power supply unit noise and modulation, carrier distortions including spread-spectrum randomisation, output stage errors, dead time errors & comparator propagation delay dispersion errors.

For instance, designers have traditionally been force to shy away from implementing switching amplifiers or switching power supply in consumer electronic devices due to there undesirable side effect of generating RF and electrical noise. Not only does this make trying to incorporate any form of switching unit into a low noise, or RF sensitive design such as RF tuners, very difficult; products incorporating "switching based techniques" have received bad press due to there electrical noise and emissions causing intermodulation by-products within the audio band, resulting in an undesirable "sonic signature".

In consumer electronics the typically RF bands of interest are the "AM" band around 250KHz to 1500 KHz, and the "FM" band from 88MHz to about 110MHz. For the AM band, which is at the lower-end of the RF spectrum, the propagation effect of the conducted emissions (H-Field) is very effective. It is nearly impossible to

shield against conducted emissions, i.e. magnetic component field leakage, within the confines of a small-integrated "consumer" priced product. The only real practical conventional solution for the AM band reception is to use a switching frequency above the highest required reception frequency. However the modulation bandwidth of the modulator (say 200KHz), will be centered +/_ around the carrier frequency. Thus for AM reception up to 1600KHz, this dictates a switching frequency above 1.8MHz. For optimal efficiency the switching frequency should however be no more then required.

Although switching above 1.8MHz results in satisfactory AM performance, the same cannot be said for the FM band since switching units operate with "squared waves", which in theory can contain an infinite spectrum of "HF" components. Due to the higher frequency of these components, the propagation of "E-field component" is very effective. Although screening and high order filtering techniques can go a long way to reducing "E-field" emission problems, they can never be 100% effective. These measures also add too product cost and complexity.

As RF emissions are harmonically spaced, they introduce discrete carriers within the "FM band". This causes a severe problem with modern day "Auto Seek" receivers, which scan the "FM" band for carriers of significant signal strength. Using switching units within such receivers results in the "Auto Seek" level detectors stopping at every RF harmonic of the switching unit's carrier, making them practically useless.

The solution to this problem provided by the present invention is to use a spread-spectrum carrier. As the carrier is not correlated to the input signal, there will be no discrete harmonics of the carrier at higher frequencies, just a lower level noise. This background noise will reduce the signal/noise ratio of the receiver, but will enable the tuning circuits to function correctly in the presence of the switching carrier.

Traditionally spread spectrum techniques have not been possible for high performance low distortion and noise switching applications. In a switching based power supply unit for instance, a spread spectrum carrier results in LF noise on the output rails, due to the normally low levels of feedback available. Satisfactory filtering of this LF noise requires large value de-coupling capacitors and magnetics, both of which are detrimental to the size and cost of the end product. Likewise in a

switching amplifier, modulation of the carrier results in poor distortion and noise performance. These problems are overcome by the present invention.

Another benefit of using a spread spectrum carrier is the randomisation of any aliasing distortion products demodulated within the audio band. 100% HF/RF filtering of the input is not practical both in sonic and cost terms. Aliasing distortion artefacts are becoming increasing problematic with the increasing use off "RF noisy" digital based audio input sources such as CD and DVD players. By randomising the carrier, the resultant aliasing intermodulation products no longer cause discrete tones on the noise floor, but are effectively randomised, gently increasing the noise floor - a much preferable situation from a sonic point of view.

A specific embodiment of the present invention will now be described, by way of example only, with reference to the accompanying drawings, in which:

Figure 1 is a simplified block diagram of a modulator circuit embodying the present invention;

Figure 2 is a schematic circuit diagram of one preferred embodiment of the integrator stage of the circuit of Figure 1; and

Figure 3 is a schematic circuit diagram of one preferred embodiment of a modulator stage of the circuit of Figure 1.

Referring to Figure 1, the illustrated circuit is a simple single ended modulator which essentially consists of a difference stage comprising a subtractor 201; a fourth order integrator stage comprising four cascaded integrators 202, 204, 206, 208 and an adder 209; and a continuous time pulse with modulating stage comprising a comparator 211 and reference carrier signal generator 210. The modulator circuit receives an input analogue signal from an input stage 1 and delivers a pulse with modulated output signal to an output stage 2. A feedback path is provided between the output stage 2 and the subtractor 201.

In operation, the output signal is subtracted from the input signal at the subtractor 201 and the resultant error signal is fed to the first integrator 202 of the integrator stage. The four integrators 202, 204, 206 and 208 are cascaded and coupled together via tap co-efficients 203, 205 and 207 which are attenuators with values set appropriately to ensure stability. The outputs of the four integrators are summed at adder 209 and the summed signal is fed to one input of the comparator 211. The

second input of the comparator 211 receives a continuously varying reference carrier signal from the signal generator 210. The comparator quantifies the input signal with respect to amplitude and outputs a pulse width modulated square wave of infinite resolution with a duty cycle which varies in proportion to the varying amplitude of the original input signal.

The input and output stages may be entirely conventional and designed to suite the particular application to which the invention is put. For instance, in an audio power amplifier application the input and output stages may be conventional Class-D stages, the output stage for example comprising a power MOSFET switching stage coupled to an LC output filter. In such an application the feedback signal is taken from the output of the switching transistors. Similarly, the modulator stage may be entirely conventional as is, for instance, found in a typical Class-D amplifier. The carrier signal may be any suitable periodic signal such as a continuous triangular wave as is commonly used as a reference signal in conventional Class-d amplifiers.

A fundamental difference between the circuit in accordance with the present invention and conventional modulating circuitry as found, for instance, in Class-D amplifiers, is the provision of a greater than first order integrator stage providing high levels of feedback which substantially reduces noise and distortion in the output signal. The noise reduction is significantly greater than that that could be expected from a first order modulator as for instance disclosed in the Motorola application note referred to above. Indeed, with the present invention all in band Class-D distortion is reduced to negligible levels, including distortion in the output stage, the comparator, the power supply and the reference signal.

The invention also improves upon the performance of conventional delta-sigma modulators by eliminating the distortion and noise associated with the inherently limited resolution of the discrete time quanitiser of a delta-sigma modulator. With the present invention the input signal is quantised with respect to amplitude only so that the output has infinite time resolution.

Although, as mentioned above, the modulator stage, and in particular the carrier signal generator, may be entirely conventional, preferred embodiments of the present invention employ spread spectrum techniques to reduce radiated electromagnetic interference which manifests as noise in the RF spectrum.

Essentially the high levels of global feedback provided by the integrator stage enables the application of conventional spread spectrum techniques to the carrier signal generator to vary (either randomly or periodically) the frequency of the carrier to spread the energy of the signal and reduce correlated RF noise. Such techniques are well known in communications systems but have not previously been applied in continuous pulse width modulator circuits. For instance in conventional Class-D amplifier circuits a spread spectrum carrier signal would not be contemplated since it would simply introduce unacceptable noise into the audio output signal. With the present invention however that noise is eliminated by the feedback.

A variety of different techniques may be envisaged to spread the spectrum of the carrier signal. The particular circuit implementation is not important provided the resulting carrier signal has a spread spectrum which is not correlated to the input signal (whether for instance a truly random or "weighted" noise source).

Specific circuit implementations of the present invention are illustrated in Figs 2 and 3 which exemplify the application of the invention, including a non-signal correlated carrier, in an audio power amplifier circuit.

Fig 2 shows a schematic of the integrator stage which is in differential format for use with conventional Class-D H Bridge output stages. Resistors R1, R2, R3 and R20 comprise the feedback resistors for the amplifier and determine the gain. U1 is a combined subtractor and integrator. U7 provides an inverted output in order to maintain improved common mode performance of the input section. R4, R5 and R22, R23 are the first tap coefficients. U2 is the second order integrator set up as a differential to single ended converting integrator. R7 and R8 provide the second tap coefficient, U3 the third integrator, R10 and R11 the third tap coefficient with the final integrator provided by U4. The outputs of each integrator are summed by U5 with the final analogue output voltage WOP. All the integrators are continuous time; thus the output is completely covered by the continuous feedback.

Fig 3 shows the schematic of the pulse width modulator. This takes the output from the integrator stage and generates two out of phase pulse width modulated signals for each side of the H Bridge output. The output from the integrator stage WOP is fed to two comparators U11a and U11b via resistors r33 and r20. The threshold voltage is effectively modulated by mixing a triangular waveforms of

opposite phase via resistors R32 R25. This comparator is low cost, but gives excellent performance, with low propagation delay error. The digital outputs are generated by U12, for feeding to the H Bridge outputs.

The two 180 deg. out of phase triangular waves are generated from a 3.5 MHz clock input from the Spread-Spectrum VCO. This is divided by two, by flip-flop U9 generating 1.75 MHz. This has complementary square wave outputs, which are fed to u6 and u10. These convert the square wave into a triangular wave

In the above embodiment of the invention the carrier spectrum is spread by modulating the clock. One possible alternative would be to introduce noise into the audio path by, for instance, adding a shaped noise source to the output of the modulator.

It will be appreciated by the that many modifications can be made to the detailed circuitry described above. Appropriate circuit designs to implement the present invention in a wide variety of applications will be apparent to the skilled person. In particular it will be understood that the invention is not limited to audio amplifier systems but can be used in any application requiring switched signal modulation such as, for instance, in a switched power supply unit. Many other possible applications of the invention will be readily apparent to the appropriately skilled person.

CLAIMS:

1. A signal processing circuit comprising:
   - a difference stage for receiving an input signal to be processed and a feedback signal taken from an output signal of the circuit, the difference stage generating a difference signal corresponding to the difference between the input and feedback signal;
   - an integrator stage coupled to said difference stage to receive said difference signal and outputting an integrated signal;
   - a time continuous pulse width modulating stage coupled to the the integrator stage to receive the integrated signal and to modulate said signal with reference to a continuously varying carrier signal; and
   - a continuous time feedback path coupled to the output of the modulating stage and an input of the difference stage;
   - wherein the integrator stage comprises at least two integrators to provide second or higher order integration .

2. A signal processing circuit according to claim 1, wherein said carrier signal is a spread spectrum signal non-correlated to the input signal.

3. A signal processing circuit according to claim 1 or claim 2, wherein the modulating stage comprises a comparator which receives said integrated and reference carrier signals, and a reference signal generator which supplies a non-signal correlated spread spectrum carrier signal to said comparator.

4. A signal processing circuit according to claim 3, wherein said reference signal generator comprises a clock which is modulated to spread the spectrum of the signal.

5. A signal processing circuit according to claim 1 or claim 2, wherein the spectrum of the carrier signal is spread by introducing noise into the signal path before feedback to the difference stage.

6. A signal processing circuit according to any preceding claim, further comprising a power switching stage having an input and an output, the input being coupled to the output of the modulator stage and the feedback path being couple to the output of the switching stage.

7. A signal processing circuit according to any preceding claim, wherein the integrator stage comprises two or more cascaded integrators and an adder which sums the outputs of the integrators

8. A signal processing circuit according to claim 7, wherein said integrators are coupled together via tap coefficients which stabilise the integrator stage.

9. A signal processing circuit according to any preceding claim, wherein the difference stage and integrating stage are combined by provision of a combined subtractor/integrator.

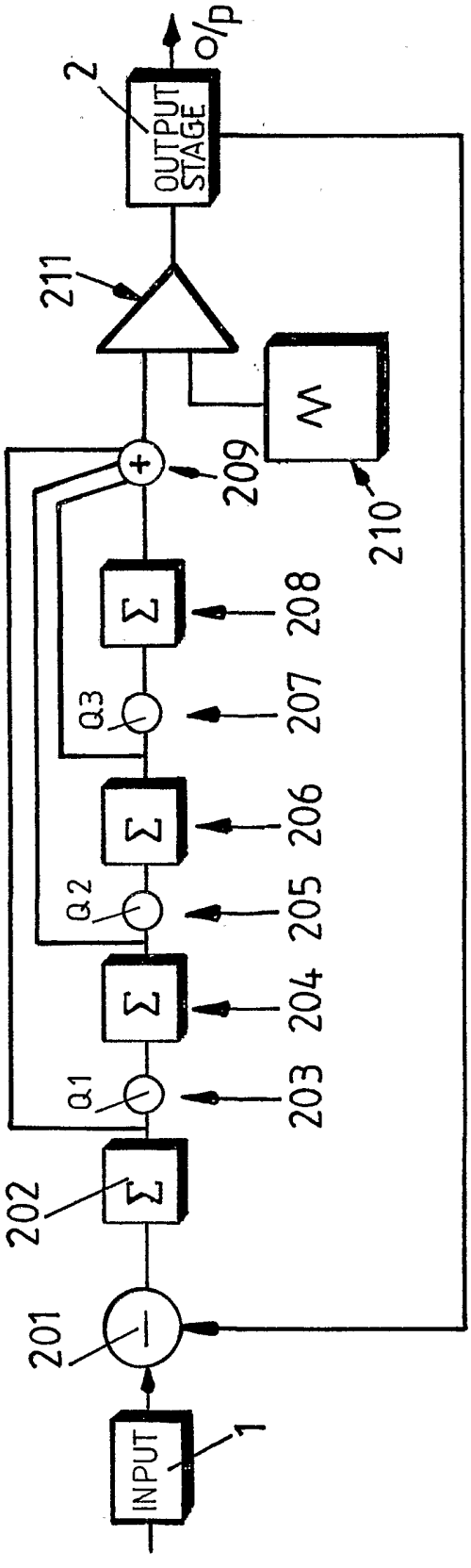
INPUT
1
201
202
Σ
Q1
203
Σ
204
Q2
205
Σ
206
Q3
207
Σ
208
209
210
211
OUTPUT STAGE
2
o/p

FIG.1

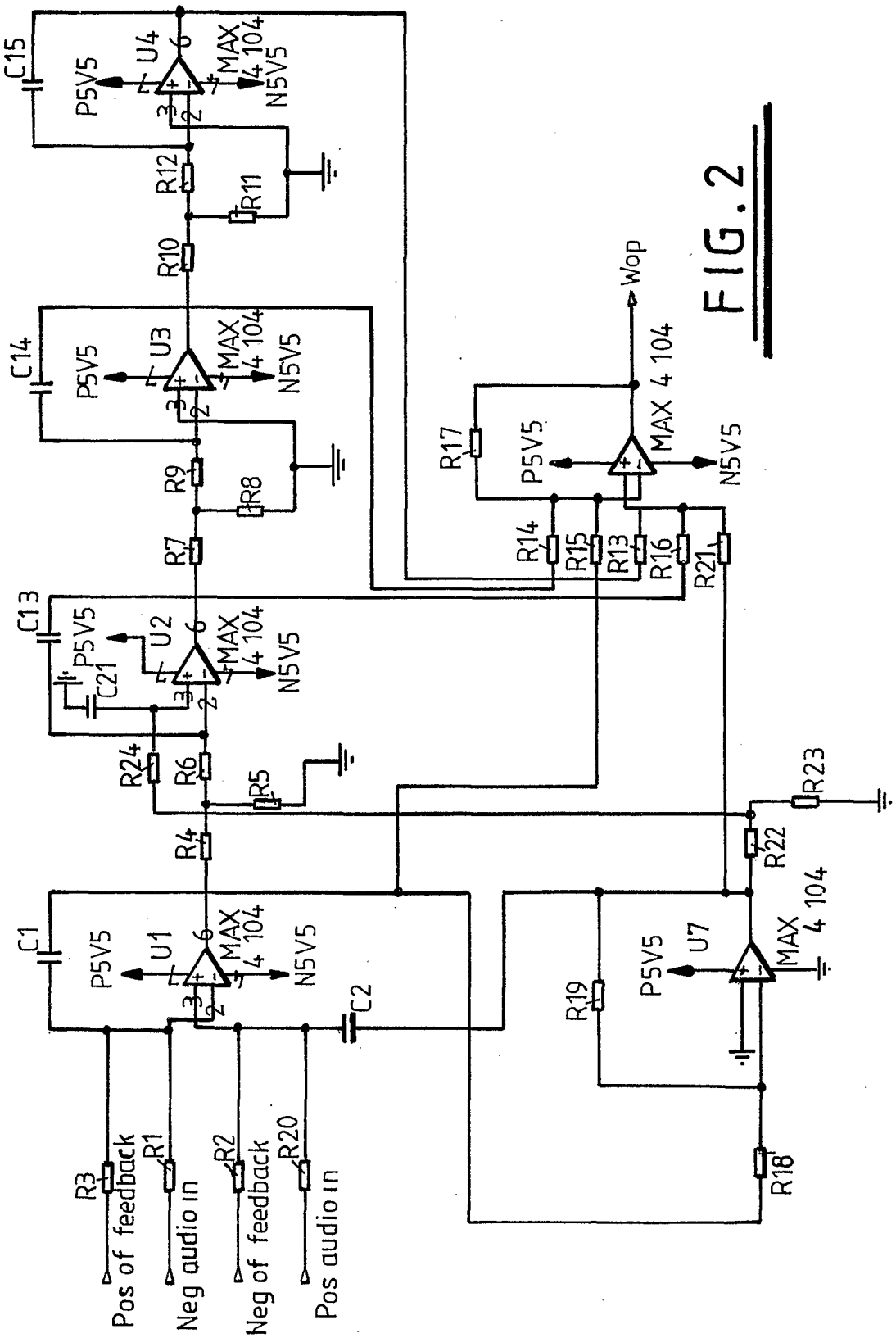
C15
P5V5
U4
MAX 4 104
N5V5
R12
R11
R10
C14
P5V5
U3
MAX 4 104
N5V5
R9
R8
R7
C13
P5V5
C21
U2
MAX 4 104
N5V5
R24
R6
R5
R4
C1
P5V5
U1
MAX 4 104
N5V5
C2
R3
R1
R2
R20
Pos of feedback
Neg audio in
Neg of feedback
Pos audio in
Wop
MAX 4 104
R17
P5V5
N5V5
R14
R15
R13
R16
R21
R23
R22
R19
P5V5
U7
MAX 4 104
R18

FIG. 2

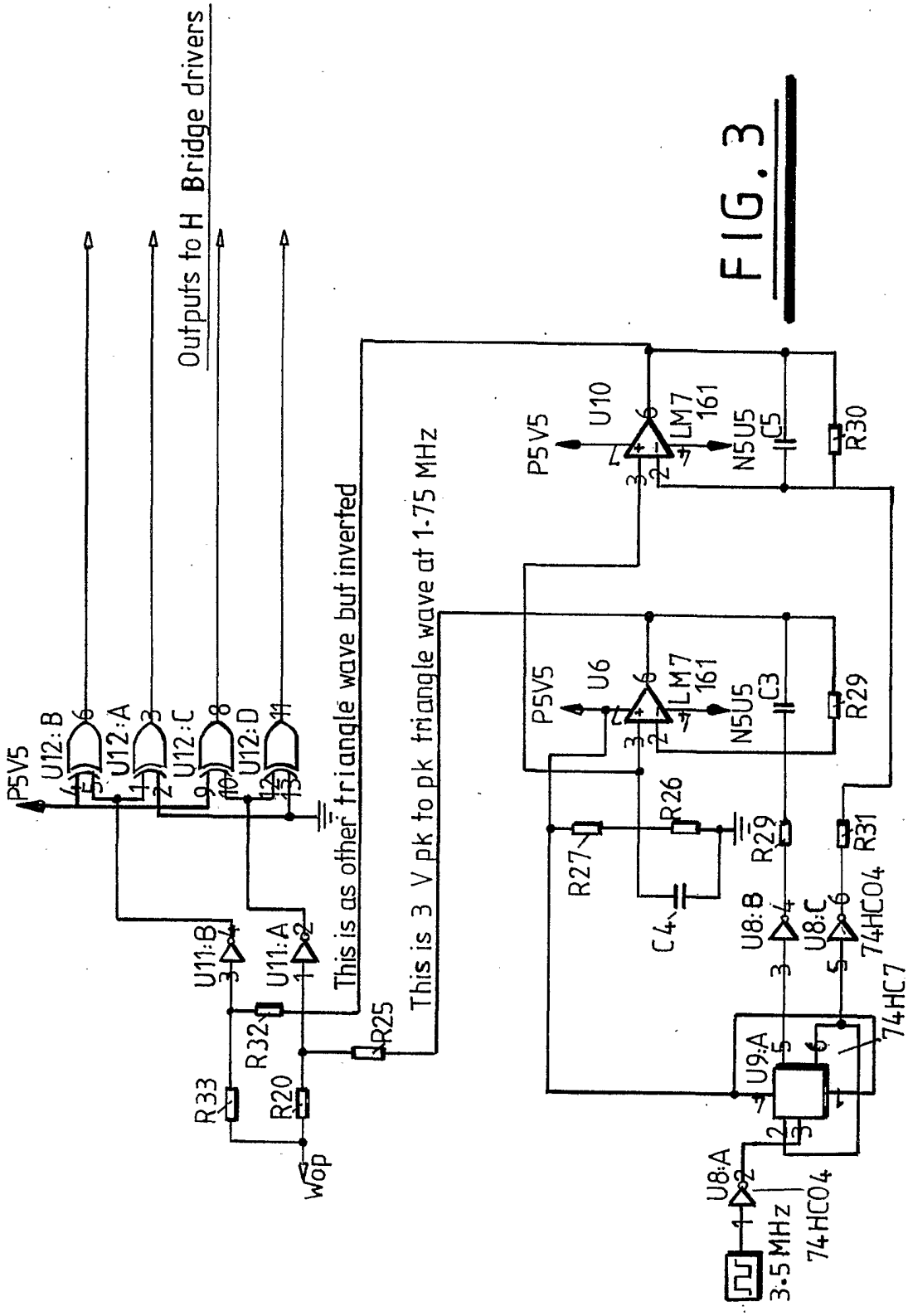
Outputs to H Bridge drivers
P5V5
U12:B
U12:A
U12:C
U12:D
U11:B
U11:A
R32
R33
R20
R25
wop
This is as other triangle wave but inverted
This is 3 V pk to pk triangle wave at 1-75 MHz
P5V5
U10
LM7
161
N5U5
C5
R30
P5V5
U6
LM7
161
N5U5
C3
R29
R26
R27
C4
R29
R31
U8:B
U8:C
74HC04
74HC7
U9:A
U8:A
74HC04
3-5 MHz

FIG. 3

INTERNATIONAL SEARCH REPORT

I onal Application No
PCT/GB 02/01815

A. CLASSIFICATION OF SUBJECT MATTER
IPC 7 H03F3/217

According to International Patent Classification (IPC) or to both national classification and IPC

B. FIELDS SEARCHED

Minimum documentation searched (classification system followed by classification symbols)
IPC 7 H03F H03M H02M

Documentation searched other than minimum documentation to the extent that such documents are included in the fields searched

Electronic data base consulted during the international search (name of data base and, where practical, search terms used)

EPO-Internal, PAJ

C. DOCUMENTS CONSIDERED TO BE RELEVANT

Category °	Citation of document, with indication, where appropriate, of the relevant passages	Relevant to claim No.
X	US 5 352 986 A (MODGIL ONKAR S ET AL) 4 October 1994 (1994-10-04)	1,6,9
Y	abstract; figures 2,8,10 ---	2-5
Y	US 4 952 884 A (TOKUMO AKIO ET AL) 28 August 1990 (1990-08-28) abstract; figure 1 ---	2-5
Y	PATENT ABSTRACTS OF JAPAN vol. 012, no. 293 (E-645), 10 August 1988 (1988-08-10) & JP 63 069465 A (TOSHIBA CORP), 29 March 1988 (1988-03-29) abstract; figures 1,2,6,7 ---	2-5
A	US 5 777 512 A (DELANO CARY L ET AL) 7 July 1998 (1998-07-07) figures 5,10 ---	1-9
	-/--	

[X] Further documents are listed in the continuation of box C.

[X] Patent family members are listed in annex.

° Special categories of cited documents :

"A" document defining the general state of the art which is not considered to be of particular relevance

"E" earlier document but published on or after the international filing date

"L" document which may throw doubts on priority claim(s) or which is cited to establish the publication date of another citation or other special reason (as specified)

"O" document referring to an oral disclosure, use, exhibition or other means

"P" document published prior to the international filing date but later than the priority date claimed

"T" later document published after the international filing date or priority date and not in conflict with the application but cited to understand the principle or theory underlying the invention

"X" document of particular relevance; the claimed invention cannot be considered novel or cannot be considered to involve an inventive step when the document is taken alone

"Y" document of particular relevance; the claimed invention cannot be considered to involve an inventive step when the document is combined with one or more other such documents, such combination being obvious to a person skilled in the art.

"&" document member of the same patent family

Date of the actual completion of the international search	Date of mailing of the international search report
29 August 2002	13/09/2002
Name and mailing address of the ISA European Patent Office, P.B. 5818 Patentlaan 2 NL – 2280 HV Rijswijk Tel. (+31–70) 340–2040, Tx. 31 651 epo nl, Fax: (+31–70) 340–3016	Authorized officer Agerbaek, T

INTERNATIONAL SEARCH REPORT

International Application No
PCT/GB 02/01815

C.(Continuation) DOCUMENTS CONSIDERED TO BE RELEVANT

Category °	Citation of document, with indication,where appropriate, of the relevant passages	Relevant to claim No.
A	DE 196 19 208 A (KLUGBAUER HEILMEIER JOSEF) 13 November 1997 (1997-11-13) column 6, line 16; figure 14	1-9

INTERNATIONAL SEARCH REPORT

Information on patent family members

Ir tional Application No
PCT/GB 02/01815

Patent document cited in search report	Publication date	Patent family member(s)	Publication date
US 5352986 A	04-10-1994	AU 6266894 A	15-08-1994
		CA 2154490 A1	04-08-1994
		WO 9417588 A1	04-08-1994
		US 5521549 A	28-05-1996
US 4952884 A	28-08-1990	JP 2177606 A	10-07-1990
		JP 7085524 B	13-09-1995
		DE 3927175 A1	05-07-1990
JP 63069465 A	29-03-1988	NONE	
US 5777512 A	07-07-1998	EP 0906659 A1	07-04-1999
		JP 2001503929 T	21-03-2001
		WO 9749175 A1	24-12-1997
DE 19619208 A	13-11-1997	DE 19619208 A1	13-11-1997