Aug. 16, 1955 V. SILBERSTEIN 2,715,396

INERTIA STARTER

Filed June 9, 1952

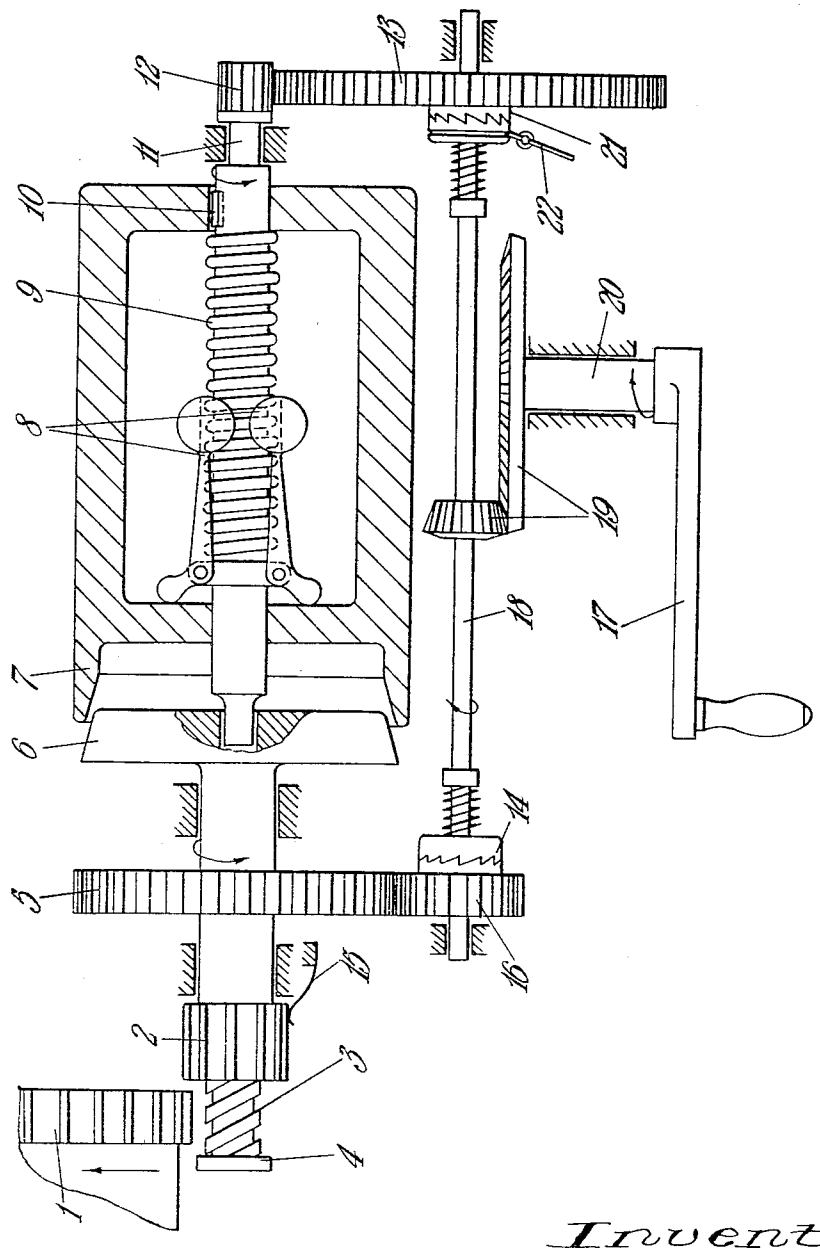

Inventor
V. Silberstein
By Glascock Downing Seebold
Attys.

United States Patent Office

2,715,396

Patented Aug. 16, 1955

2,715,396

INERTIA STARTER

Victor Silberstein, London, England

Application June 9, 1952, Serial No. 292,500

Claims priority, application Great Britain June 12, 1951

8 Claims. (Cl. 123—179)

This invention relates to inertia starters for internal combustion engines, particularly diesel engines, of the kind comprising a flywheel adapted to be rotated and then coupled to the crankshaft of an engine, and means for decoupling the flywheel of the starter from the crankshaft when the engine has started.

Inertia starters of this kind are usually provided with a loose pinion engaged about a threaded shaft and arranged so that, when the starter flywheel is clutched, directly or indirectly, to this shaft, the pinion is thrown into engagement with a gear wheel arranged to turn the crankshaft, this gear wheel being generally constituted by the main flywheel of the engine and having peripheral teeth for this purpose. When the engine starts, the speed of this gear wheel is increased so that the speed of the loose pinion, now become the driven instead of the driving member, overruns that of the threaded shaft on which it is mounted, and the pinion is automatically screwed out of engagement with the gear wheel.

Difficulties have, however, arisen in connection with the conventional loose pinion arrangements described in the preceding paragraph, because of the occasional failure of the pinion to engage with the gear wheel during the short period of the starter action, and it is an object of this invention to provide means for making such engagement more certain.

It is a further object of this invention to provide means whereby the engine can be put into a condition for easy starting before the starter flywheel is coupled to the crankshaft, by a combination of scavenging and oil-film breaking operations.

According to this invention an inertia starter of the kind referred to comprises drive means, preferably for manual drive, a step-up gear connection between the drive means and starter flywheel, a pinion adapted to engage an engine to be started, clutch means between the pinion and starter flywheel, and an auxiliary drive connection between the drive means and said pinion in parallel with said step-up gear connection and clutch, adapted to turn the engine at below starting speed when the pinion is engaged therewith before said clutch is engaged to start the engine.

Preferably, the pinion is mounted on a threaded shaft for screwing into and out of engagement with a toothed rotary engine member, and the auxiliary drive connection is adapted to drive the pinion into said engagement, means such as a light spring pressed against the pinion teeth being provided to restrain the pinion against rotation whilst it is being so driven into engagement.

The auxiliary drive connection between said drive means and pinion may incorporate a step-down gear and preferably embodies a one-way clutch.

The connection between the drive means and the starter flywheel may also be non-reversible and may also be disconnectable without severing the auxiliary drive, so that the latter can be used for turning the engine at a slow speed for adjustment purposes.

The clutch between the starter flywheel and pinion is preferably of the type which operates automatically at a predetermined speed and disengages only after a substantial reduction in speed. Preferably, centrifugal governors are employed having a spring return and being mounted at the ends of pivoted levers adapted to thrust rotary cam surfaces into engagement in an axial direction when the levers are swung on centrifugal motion of the governors.

The accompanying drawing illustrates, in diagrammatic form, one embodiment of this invention.

In the embodiment, a conventional loose pinion **2**, engaged about a threaded end of the main starter shaft **3**, is located so that it can be brought into engagement with a toothed rim **1** affixed to the flywheel of the engine to be started (not shown), engagement being effected by rotating shaft **3** in the direction of the arrow while preventing pinion **2** from turning by means shown as a light spring **15**.

The starter is provided with a handle **17** for manual drive and, when turned in the direction of the arrow, the drive is transmitted by way of shaft **20**, bevel wheels **19**, shaft **18**, ratchet **14**, and spur wheels **16** and **5** to shaft **3**, this being a step-down transmission which causes pinion **2** to engage with toothed rim **1** as described in the preceding paragraph. Stop ring **4** prevents movement of pinion **2** beyond the engaged position.

Shaft **18** also serves to transmit, by way of ratchet **21**, spur wheels **13** and **12**, shaft **11** and key **10**, drive to starter flywheel **7**. The latter is slidable on shaft **11** in an axial direction. As described above centrifugal means comprising weighted levers **8** and spring **9** are provided and are arranged so that, when flywheel **7** reaches a predetermined angular velocity, it is moved along shaft **11** into clutching engagement with a clutch member **6** fastened to shaft **3**, the direction of the rotation being the same as that occasioned by the auxiliary drive described in the preceding paragraph.

In a practical arrangement, shaft **18** may have to make several hundred revolutions before manual actuation of handle **17** brings flywheel **7** to the angular velocity needed to cause clutching, during which time pinion **2** is moved fully into the engaged position and turns the engine slowly for a few revolutions. This has the particular advantage that scavenging and priming of the engine is effected immediately prior to each starting operation.

Inertia starters in accordance with this invention are especially useful in conjunction with diesel engines, such as are found in farm tractors, and it is a characteristic of these engines that they are difficult to turn for adjustment or other purposes. By incorporating means for interrupting the main drive without interrupting the auxiliary drive, the desired provision for slow and controlled turning of the engine is made readily available; where a ratchet is inserted in the main drive, such as ratchet wheel **21** shown in the accompanying drawing, this means may constitute means for disengaging the ratchet, and is illustrated diagrammatically as member **22**.

It will be understood that various alterations may be made to the illustrated embodiment without departing from the scope of this invention. Thus, instead of having a common shaft **18** between the main and auxiliary drives, the latter may take the form of a belt drive, handle **20** being disconnectable from bevels **19** by means of ratchet **22**, transposed for this purpose to a position between the handle and bevels **19** so that such disconnection can be effected merely by pulling on the handle.

I claim:

1. An inertia starter for engines comprising a starter

flywheel, drive means, operatively connected with the starter flywheel, a pinion adapted to engage the engine to be started, clutch means located intermediate the pinion and starter flywheel, and an auxiliary drive operatively connected between said drive means and the pinion in parallel with said connection to the starter flywheel and the clutch means adapted to turn the engine at below starting speed when the pinion is engaged with the engine, before said clutch means is engaged.

2. A starter as set forth in claim 1, wherein the pinion is mounted on a threaded shaft for screwing into and out of engagement with a toothed rotary member connected to the engine, and wherein the auxiliary drive is adapted to drive the pinion into said engagement.

3. A starter as set forth in claim 2, wherein means cooperates with the pinion teeth to restrain the pinion against rotation the pinion is being driven into engagement with the rotary member.

4. A starter as set forth in claim 1, wherein the auxiliary drive connection includes a one-way clutch.

5. A starter as set forth in claim 1 wherein the connection between the drive means and starter flywheel is disconnectable independently of the auxiliary drive between the drive means and the pinion.

6. A starter as set forth in claim 1, wherein the auxiliary drive includes a step-down gear.

7. A starter as set forth in claim 1, wherein the clutch means located intermediate the pinion and starter flywheel operates automatically at a predetermined speed and disengages only after a substantial drop in speed.

8. A starter as set forth in claim 7 wherein the clutch means comprises a rotary axially slidable clutch member, a complementary member, and centrifugal governors having a spring return and being mounted at the ends of pivoted levers adapted to slide said slidable member into engagement with the complementary member when the levers are swung on centrifugal motion of the governors.

References Cited in the file of this patent

FOREIGN PATENTS

900,419 France ---------- Oct. 2, 1944