Jan. 10, 1950 L. H. RYAN 2,494,107

HAMMERMILL WITH AUXILIARY ROTOR FOR PROVIDING A MORE EFFECTIVE DISCHARGE OF MATERIAL

Filed Aug. 13, 1945 3 Sheets-Sheet 1

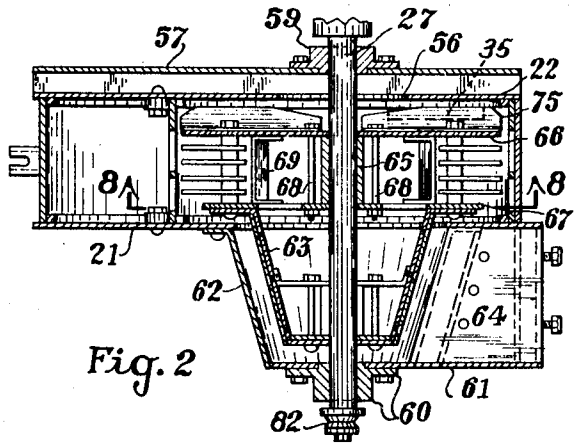


Fig. 2

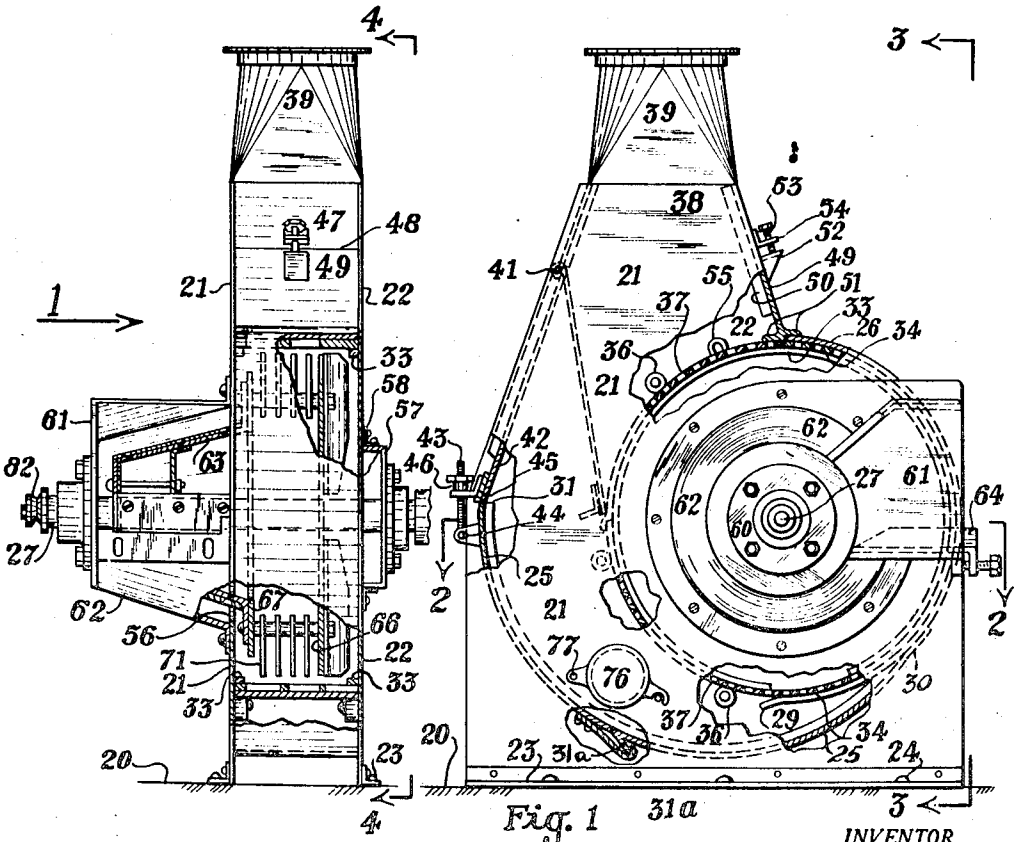


Fig. 3

Fig. 1

INVENTOR.
LYMAN H. RYAN
BY
Martin E Anderson
ATTORNEY

Jan. 10, 1950 L. H. RYAN 2,494,107

HAMMERMILL WITH AUXILIARY ROTOR FOR PROVIDING A MORE EFFECTIVE DISCHARGE OF MATERIAL

Filed Aug. 13, 1945 3 Sheets-Sheet 2

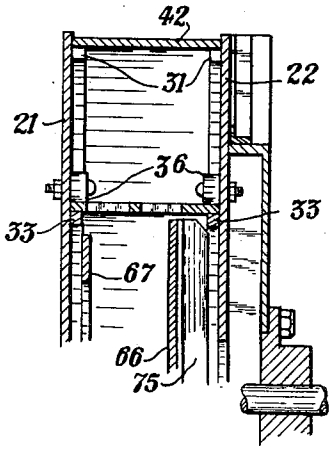


Fig. 5

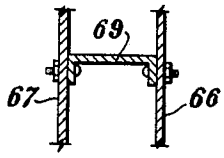


Fig. 6

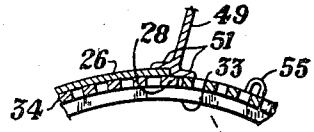


Fig. 4a

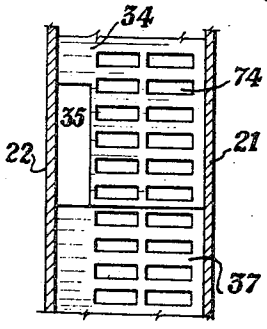


Fig. 7




Fig. 4

INVENTOR.
LYMAN H. RYAN
BY
Martin E Anderson
ATTORNEY

Jan. 10, 1950 L. H. RYAN 2,494,107

HAMMERMILL WITH AUXILIARY ROTOR FOR PROVIDING A MORE EFFECTIVE DISCHARGE OF MATERIAL

Filed Aug. 13, 1945 3 Sheets-Sheet 3

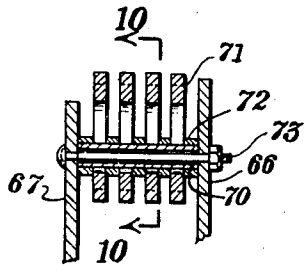


Fig. 9

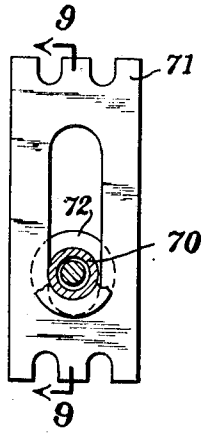


Fig. 10

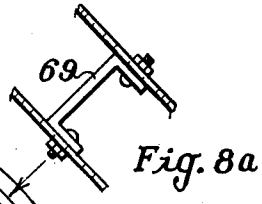


Fig. 8a

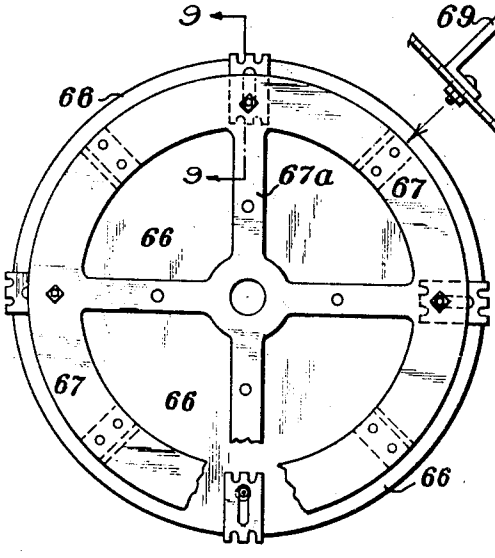


Fig. 8

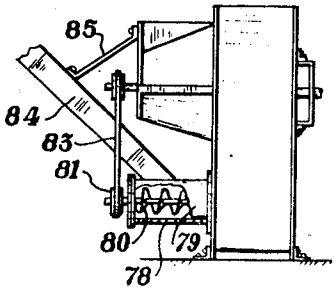


Fig. 11

INVENTOR.
LYMAN H. RYAN
BY
Martin E Anderson
ATTORNEY

Patented Jan. 10, 1950

2,494,107

# UNITED STATES PATENT OFFICE

2,494,107

## HAMMER MILL WITH AUXILIARY ROTOR FOR PROVIDING A MORE EFFECTIVE DISCHARGE OF MATERIAL

Lyman H. Ryan, Colorado Springs, Colo.

Application August 13, 1945, Serial No. 610,506

3 Claims. (Cl. 241—56)

1

This invention relates to improvements in hammermills.

Hammermills are quite extensively employed for grinding feed, such as grain, corn and alfalfa and various forms have been made and used. Applicant therefore does not claim to be the original inventor of this type of mill, but only of certain improvements thereof.

It is an object of this invention to produce a hammermill of a simple and substantial construction that shall have a large capacity in proportion to its size and which shall be provided with means for keeping the ground matter from accumulating in the discharge passage.

A further object of this invention is to produce an air blast grain elevator of such construction that the grain kernels will not be cracked when passing through the elevator.

A further object of the invention is to produce a hammermill having an auxiliary fan positioned and arranged to provide at all times a strong air current and to prevent the accumulation of ground matter about the screens.

Another object of the invention is to produce a hammermill of such construction that the interior thereof can be readily made accessible for the purpose of cleaning and repairing.

Having thus called attention to some of the objects of the invention, the invention itself will now be described in detail and for this purpose reference will be had to the accompanying drawings in which it has been illustrated in its preferred form, and in which:

Figure 1 is a side elevation of the hammermill looking in the direction of arrow 1 in Figure 3;

Figure 2 is a section taken on line 2—2, Figure 1;

Figure 3 is a front elevation looking in the direction of arrows 3, in Figure 1;

Figure 4 is a side view looking in the direction of arrows 4, in Figure 3;

Figure 4a is a view showing a portion of Figure 4 to a larger scale;

Figure 5 is a section taken on line 5—5, Figure 4;

Figure 6 is a section taken on line 6—6, Figure 4;

Figure 7 is a section taken on line 7—7, Figure 4;

2

Figure 8 is a plan view of the rotor looking in the direction of arrows 8—8, Figure 2;

Figure 8a is a fragmentary edge elevation of the rotor looking in the direction of the associated arrow;

Figure 9 is a section through one of the hammer assemeblies taken on line 9—9, Figure 8;

Figure 10 is a section taken on line 10—10, Figure 9; and

Figure 11 is a fragmentary front elevation showing the grain feed attached.

Referring now to the drawing, reference numeral 20 designates a supporting surface to which the mill is secured by suitable means. The hammermill consists of spaced front and rear side plates 21 and 22, respectively of shapes substantially like that shown in Figures 1 and 4, respectively. Secured to plates 21 and 22, along their bottom edges, are angle irons 23 that are provided with suitable perforations for the reception of bolts or lag screws 24 by means of which the machine is secured to the base. Separating the front and rear side plates are curved wall plates 25 and 26. Plate 26 is concentric with the shaft, which has been designated by reference numeral 27, and extends from the point 28 to point 29 or slightly more than 180 degrees. Plate 25 extends from point 30 to point 31 and is outwardly spiralled from point 30 so as to provide a discharge passage that has been designated by reference numeral 32. Plate 25 has been shown as formed from two parts interconnected by 31a as shown in Figure 1. Rings 33 of rectangular cross section are welded to the inner surfaces of side plates 21 and 22 in concentric relation to the shaft 27. These rings extend 360 degrees and serve as guides and supports for the screens in a manner which will hereinafter appear. A sleeper screen 34 extends from point 28 down to a point directly beneath the center of the shaft. This screen is positioned between the curved plate 26 and the ring 33 and is removable. The sleeper screen, however, is provided with openings as indicated in the drawing. The lower end of wall 26 and the lower end of screen 34 have portions cut away so as to form an elongated opening 35 through which air may flow into the discharge passage 32. Rollers 36 are pivoted to the inner surfaces of sides 21 and 22 in spaced relation to

each other and to the outer surface of rings 33. A screen 37 is positioned in the space between the rollers and rings 33 in the manner shown in Figure 4. Screen 37 extends 180 degrees and its lower end overlaps the lower end of plate 26, as shown in Figure 4. The side plate 21 and 22 have upwardly tapered portions 38 that connect with the tubular section 39, from the upper end of which pipe 40 extends to the bin or to the compartment into which the ground feed or the grain is deposited.

Pivoted between plates 21 and 22 at point 41 is a door 42, which can be swung about the pivot from the full line position shown in Figure 1 to the dotted line position. This door is held in full line position by means of a clamp comprising an eyebolt 43 that is pivoted to plate 25 at 44. The bolt passes through a notched bracket 45 secured on door 42 and is provided with a clamping nut 46. When this door is moved into the dotted line position entrance is obtained to the discharge passage 32 for the purpose of cleaning the same or removing obstructions or for making repairs. It is also possible to remove the upper section of plate 25 by disconnecting it at 31*a*.

A plate 47 is secured between the upper tapered ends of plates 21 and 22 between ends 38, by being welded or otherwise secured in position. Plate 47, however, extends only down to the line indicated by 48 in Figure 3, leaving an opening through which the screen 37 can be inserted and removed. The opening is closed by means of a removable door 49 that rests against the rectangular bars 50, as shown in Figure 1. The lower end of door 49 is provided with oppositely extending flanges 51 that overlap the plate 26 and the screen 37 and holds the end of the screen against the ring 33. Door 49 is provided with an outwardly extending bracket 52 that is engaged by the lower end of a bolt 53 which is threaded in a bracket 54 secured to plate 47. When screen 37 is to be removed and replaced, door 49 is first removed, after which a hook is connected with the loop 55 and the upper end of the screen lifted above the outer surface of plate 26, whereupon the screen can be removed and a new screen inserted by reverse action. Side 22 is provided with a central opening 56 through which the shaft 27 extends as shown in Figure 2. Secured to the outer surface of plate 22 is a channel shaped member 57 that is secured in position by means of an angle 58 or by any other suitable means. The space between the inner surface of the web of channel 57 and plate 22 forms a passage for the air which enters through the opening 56 to the auxiliary fan which will be described presently.

A bearing 59 is secured to the outer surface of the channel and another bearing 60 is secured to the outer surface of plate 61 which in turn forms the outer wall of a cutter chamber having a frustoconical wall portion 62, as shown in Figure 2. A cutter having rotating blades 63 is secured to the shaft and positioned in the cutter chamber. Since this cutter forms no part of the present invention, except insofar as it is an element of the combination, it will not be described in detail to any greater extent than necessary to explain the operation of the other portions of the machine. A shear blade 64 cooperates with the cutter and is adjustable to compensate for wear.

The two screens 34 and 37 delimit a circular rotor chamber and positioned within this chamber is a rotor that forms part of the hammermill. The rotor comprises a tubular hub 65, a circular plate 66 and another plate formed in the shape of a wheel whose rim has been designated by reference numeral 67, and whose spokes have been designated by reference character 67*a*. Bolts 68 extend through the two plates about the outside of the hub 65 and force them into engagement with the ends of the hub. The plates may, in addition, be secured to the hub by welding.

At angularly spaced intervals, the rotor plates are separated by spacers 69 that are arranged radially and form fan blades. Connected with the rotor are a number of hammer assemblies, each of which comprises a tubular sleeve 70, a plurality of hammer blades 71 and a number of spacers 72, all as shown in Figures 9 and 10. The spacers at the ends of the assembly are held in place by some suitable means, such as set screws or mechanical equivalents so that the assembly can be handled as a unit. The hammer assemblies are secured to the rotor plates by means of bolts 73. When the shaft is rotated in a clockwise direction, when viewed as in Figure 1, the rotor will form a fan and the hammer blades will be held radially by the action of the centrifugal forces, the ends of the blades terminate a short distance from the inner surface of the screen. The result of this is that any materials such as fodder, alfalfa or grain will be ground against the inner surface of the screen until it becomes fine enough to pass through the openings 74. The openings have purposely been shown larger in proportion to the size of the screen than in the actual machine to facilitate the drawing, and it is to be understood that the openings in the screens may be of any suitable size and shape and may extend transversely as shown in Figure 7 or may be round openings in the manner now commonly used. The ground material, after it passes through the screen 37 enters the discharge passage 32 and is caught by the strong air current produced by the rotor, and blown upwardly into and through pipes 40 to whatever place desired.

Since the rotor is surrounded by a screen and since there is usually a large amount of fodder positioned against the surface of the screen, it is evident that the discharge of air from the rotor chamber into the discharge passage is greatly restricted and as a result the air stream sometimes becomes too weak to transport the material to the height desired.

In order to increase the strength of the air currents in the discharge passage, the rotor has been provided with an auxiliary fan which will now be described.

A reference to Figure 2 will show that plate 66 is spaced a greater distance from the inner surface of plate 22 than plate 67 is spaced from the inner surface of plate 21. Secured to the outer surface of plate 66 is a number of fan blades 75, of which four have been shown in the drawing. The curved wall 26 and the screen 34 are provided with cutouts adjacent the narrowest portion of the discharge passage 32, forming an opening 35, which is in the plane of the auxiliary fan as can be clearly seen from Figures 4, 5, and 7. When the machine is operating, a stream of air will pass from the auxiliary fan chamber into the narrowest portion of the discharge passage and in addition to producing a strong current of air for transporting the ground material, it also cleans the lower end of the discharge passage, which otherwise frequently becomes clogged with ground material. When the narrow end of the discharge opening clogs, the material restricts

the entrance of air and the material gradually increases and fills the discharge passage. With the auxiliary fan so constructed and positioned as to introduce a strong current of air into the narrow end of the discharge passage, the latter is always kept clean.

The use of an auxiliary fan to produce a strong air current and to maintain the discharge passage open at all times is believed to be an important improvement in connection with hammermills and attention is therefore directed in particular to this feature.

It is customary for farmers who harvest their grain by means of combines, to unload the grain from the trucks into an air blast elevator which lifts the grain and delivers it to the bin. The usual way of accomplishing this has heretofore been to employ a centrifugal fan and to feed the grain to the intake opening of the fan where it will be picked up by the air stream and transported to the bin. It is evident that by removing the screen 37 and introducing grain through the cutter chamber, the device which has thus far been described could be used for elevating grain from the truck to a bin. The use of such elevators has been found objectionable for the reason that the grain comes into contact with the fan blades with such force that many of the kernels are broken, thus reducing the grade of the grain that passes through such an elevator.

In order to remove all danger of cracking the grain during the elevating, applicant has provided the following means.

Referring now more particularly to Figures 1 and 11, attention is called to the door 76 that is pivoted at 77 and covers an opening in plate 21. This opening is normally closed by the door, but when grain is to be elevated without grinding, the door is moved to open position and a grain feeding device that has been indicated in a general way in Figure 11 is attached to the hammermill. This feeding device comprises a tubular member 78 that carries a rotatable shaft 79 having a helical blade 80. The outer end of the shaft is provided with a pulley 81 that is connected with the pulley 82 on shaft 27 by means of a belt 83. A chute 84 has its lower end connected with the tubular member 78 and is secured to the hammermill by some suitable braces like those indicated by reference numeral 85. When grain is poured into the chute 84, it flows into the tubular member 78 and is fed into the discharge passage 32 by means of the rotating screw or helical blade 80. The rate at which the grain is fed is, of course, dependent on the rate at which the helical blades is rotated and its pitch.

It will be observed that the grain is fed directly into the discharge passage where it is caught by the air stream from the auxiliary fan and carried upwardly through the pipes and is finally discharged into a bin or into suitable containers.

It is evident that since the grain does not pass through the rotor, but comes directly into contact with the air stream, the kernels will not break due to sudden impact with fast moving metal members.

Since the grain is not to be ground in any event and since it is merely to be elevated, the logical place to introduce the grain is into the discharge passage above the point where the air stream enters from the auxiliary fan.

Of course, since the rotor is turning at the same time as the auxiliary fan, it will also act as a fan and force air into the discharge chamber, thereby producing a very strong current of air which



readily conveys the grain to whatever place is desired. If it is found desirable to do so, the screen between the rotor chamber and the discharge passage can be replaced by an imperforate plate when the machine is used for elevating grain. The use of an auxiliary fan as shown and described makes it possible to use a screen extending the full 180 degrees between the rotor chamber and the discharge passage. The grain is fed into the discharge chamber on the side opposite from the auxiliary fan and hence into a slow stream of air moving gradually into the high velocity stream.

Having described the invention what is claimed as new is:

1. A hammermill comprising a housing having spaced substantially parallel vertical side plates, the housing being divided into a substantially circular grinding chamber and upwardly ranging downwardly tapering discharge chamber, the two chambers being separated by an arcuate partition forming the outer wall of the grinding chamber, the arcuate wall separating the two chambers being foraminated, a shaft mounted for rotation in the vertical side plates, at a point concentric with the grinding chamber, a rotor carried by the shaft within the grinding chamber, said rotor comprising two spaced plates, one of which is provided near its center with openings for the admission of material into the rotor, the other being imperforate, means for feeding material to the rotor, a plurality of groups of hammers positioned in angularly spaced relation adjacent the periphery of the rotor and pivotally connected with the rotor plates, the width of the rotor being less than the distance between the vertical side plates of the housing, the imperforate rotor plate having the side facing the adjacent vertical housing side plate, provided with a plurality of radial blades forming a fan, the last named vertical housing side plate having an opening for the admission of air to the fan, the foraminated wall separating the two chambers having a large opening communicating the fan chamber with the closed narrow lower end of the discharge chamber for removing material from near the closed lower end thereof.

2. A hammermill comprising, a housing whose side walls are formed by spaced substantially parallel vertical plates, the space between the plates being divided into a substantially circular grinding chamber and a downwardly tapering upwardly ranging discharge chamber, the latter being closed at its lower end, the two chambers being separated by an arcuate screen of foraminated sheet metal, a shaft passing through the housing and mounted for rotation about an axis substantially concentric with the grinding chamber, a rotor on the shaft, said rotor comprising two spaced plates, one of the plates having an opening adjacent its center for the admission of material into the rotor, the other plate being imperforate, means for feeding material to the opening, a plurality of angularly spaced groups of hammers positioned between the rotor plates, connected therewith for pivotal movement, the imperforate rotor plate being spaced some distance from the adjacent vertical side wall and provided on the side facing of the housing side plate with a plurality of radial blades forming a fan, said side wall having a central opening for admitting air to the fan, that portion of the circular wall separating the grinding chamber and the discharge chamber having a large opening communicating the fan chamber with the dis-

charge chamber at a point adjacent the closed end of the latter, whereby when the mill is operating a stream of air will be delivered into discharge chamber near its closed end removing material therefrom.

3. A hammermill comprising a housing having spaced parallel vertical side plates separated by a cylindrical wall, a portion at least of which is foraminated, a shaft extending through the housing in concentric relation with the cylindrical wall, the latter delimiting a grinding chamber, a second spacer wall positioned to the outside of the circular wall forming with the latter and with the side plates, a downwardly tapering upwardly flaring discharge chamber closed at its lower end, a rotor carried by the shaft within the grinding chamber, said rotor comprising two spaced apart plates, one of the plates having openings adjacent its center for the admission of material to be ground, the other plate being imperforate, a plurality of angularly spaced groups of hammers positioned between the rotor plates and pivotally attached to them, the side of the imperforate rotor plate facing the adjacent side plate of the housing having a plurality of radial blades attached thereto forming a fan, the housing side plate having an opening adjacent the shaft for admitting air to the fan, the foraminated wall plate separating the grinding chamber from the discharge chamber having a cut-out



portion forming a large opening communicating the fan with the discharge chamber at a point near the closed end thereof, whereby when the mill is operating a stream of air from the fan will enter the discharge chamber near its closed end, whereby material entering the discharge chamber beyond the air entrance opening will be carried along by the air current from the fan.

LYMAN H. RYAN.

## REFERENCES CITED

The following references are of record in the file of this patent:

UNITED STATES PATENTS


| Number | Name | Date |
|---|---|---|
| Re. 14,926 | Plaisted | July 27, 1920 |
| 1,562,562 | Jacobson | Nov. 24, 1925 |
| 1,659,499 | Sedberry | Feb. 14, 1928 |
| 1,789,583 | Elderkin | Jan. 20, 1931 |
| 1,861,779 | Bornhauser | June 7, 1932 |
| 1,911,718 | Saunders | May 30, 1933 |
| 1,934,180 | Fischer et al. | Nov. 7, 1933 |
| 2,038,594 | Nichols | Apr. 28, 1936 |
| 2,045,582 | Clement | June 30, 1936 |
| 2,160,695 | Brannon | May 30, 1939 |
| 2,279,219 | Baker et al. | Apr. 7, 1942 |
| 2,312,612 | Wetmore | Mar. 2, 1943 |
| 2,424,316 | Johnston | July 22, 1947 |