United States Patent [19]

Duerr

[11] **3,826,572**

[45] **July 30, 1974**

[54] **PHOTOGRAPHIC PLATE PRINTER**

[76] Inventor: **Dennis C. Duerr,** 22426 Abordo, Saugus, Calif. 91350

[22] Filed: **Jan. 18, 1973**

[21] Appl. No.: **324,824**

[52] **U.S. Cl.** **355/93,** 355/91, 355/113

[51] **Int. Cl.** **G03b 27/04**

[58] **Field of Search** 355/113, 91, 92, 93, 94, 355/85, 86, 87

[56] **References Cited**

UNITED STATES PATENTS

3,043,204	7/1962	Benson	355/93
3,266,402	8/1966	Benson	355/93
3,357,335	12/1967	Blatherwick	355/93

Primary Examiner—Richard L. Moses

[57] **ABSTRACT**

A photographic plate printer comprising a box-like cabinet with a front side and an opening in the top, a light source in the cabinet below and disposed toward said openings, a flat carrier with a plate supporting surface and mounting means pivotally and shiftably mounting the carrier to the cabinet whereby the carrier is shiftable from a working position where it occurs above and forwardly offset from the top of the cabinet with its support surface disposed upwardly to an exposing position where it occurs within the opening in the cabinet with its support surface disposed downwardly.

11 Claims, 4 Drawing Figures

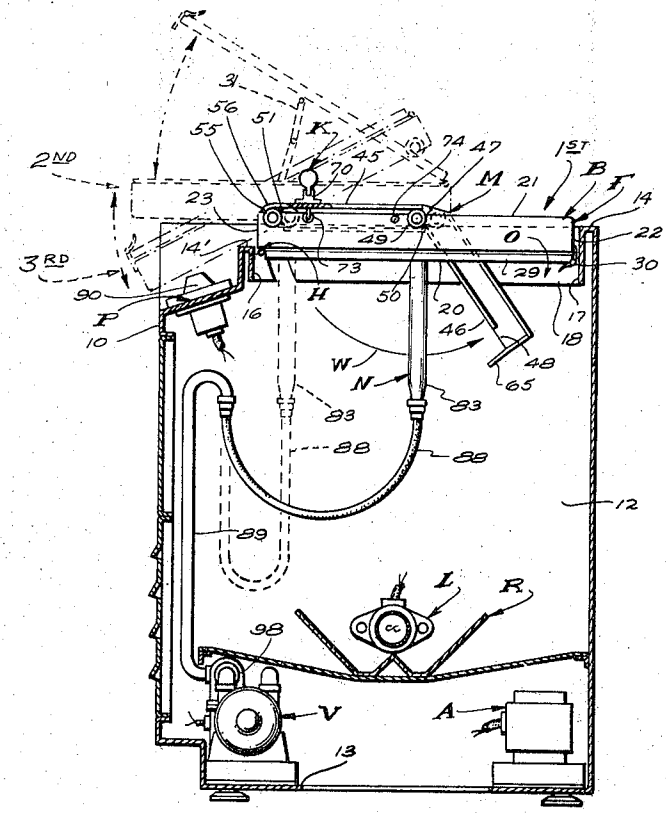

Fig. 1.

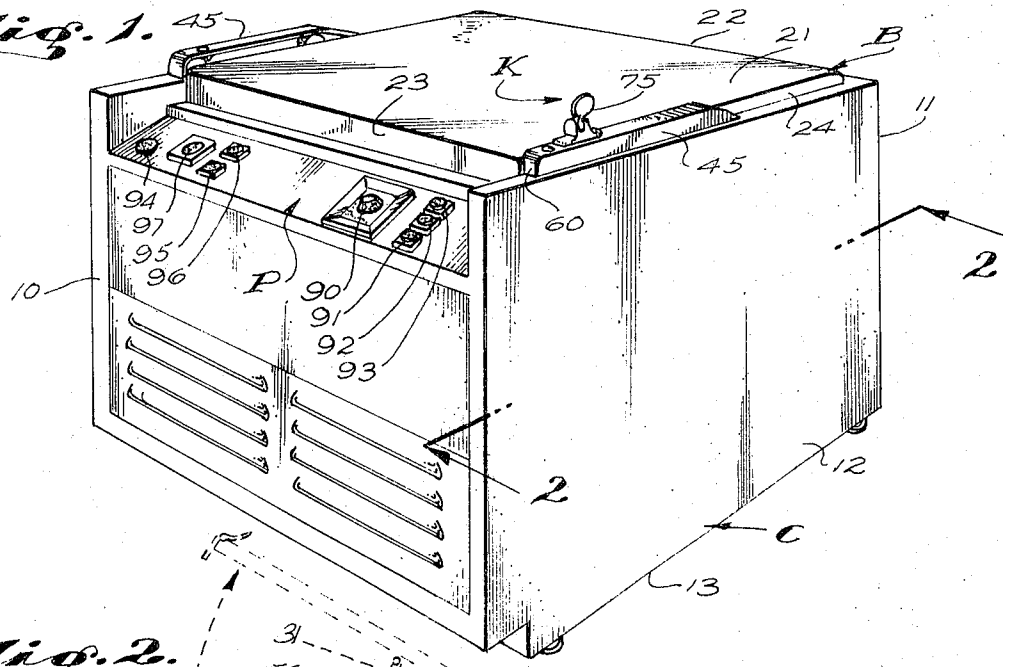
45
22
21
B
K
75
23
24
11
45
94
97
95
96
P
90
91
92
93
60
2
10
2
12
C
13

Fig. 2.

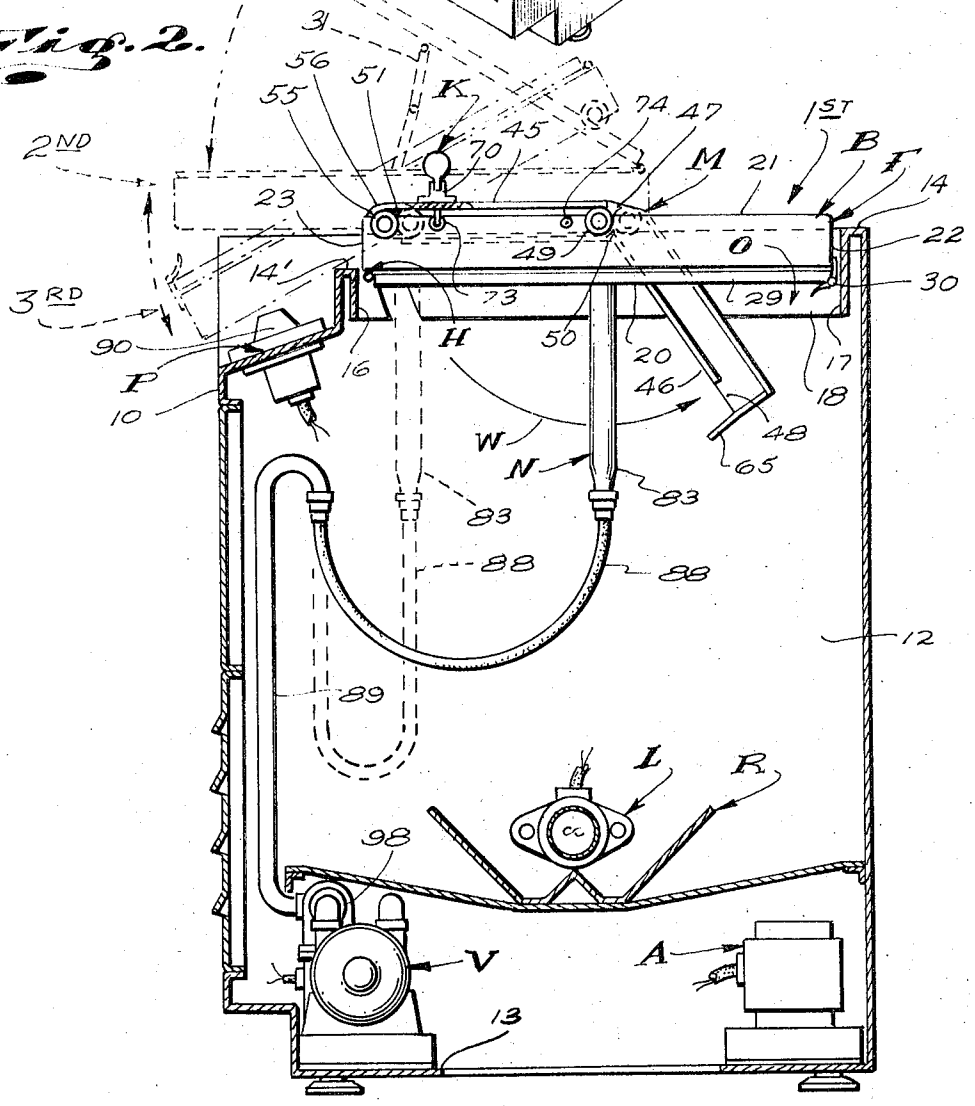
31
56
51
55
K
45
74
47
1ST
B
F
2ND
70
M
21
14
23
22
49
O
14'
73
29
30
3RD
90
H
50
20
17
P
16
46
18
10
W
48
N
65
83
83
88
88
12
89
L
R
98
V
A
13

Fig. 3.

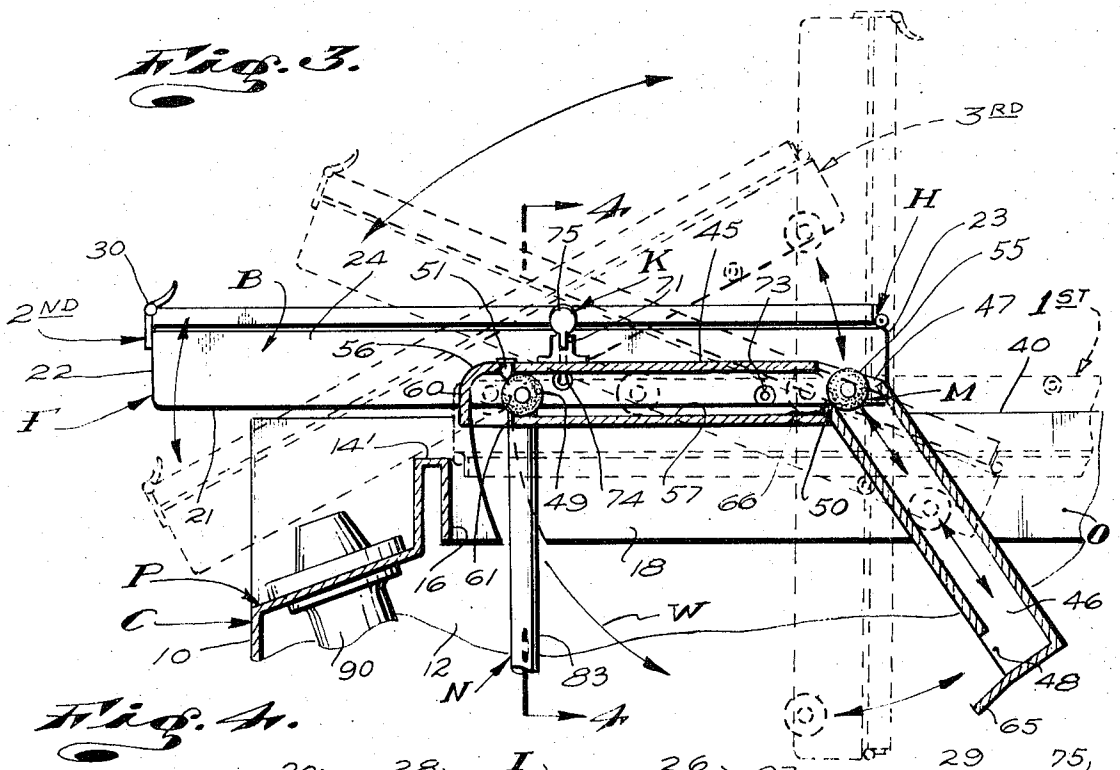
3RD
H
23
55
47
1ST
40
M
30
2ND
B
24
51
75
K
45
71
73
22
F
56
60
14'
21
49
74
57
66
50
O
P
C
10
90
16
61
18
12
N
83
W
46
48
65
4
4

Fig. 4.

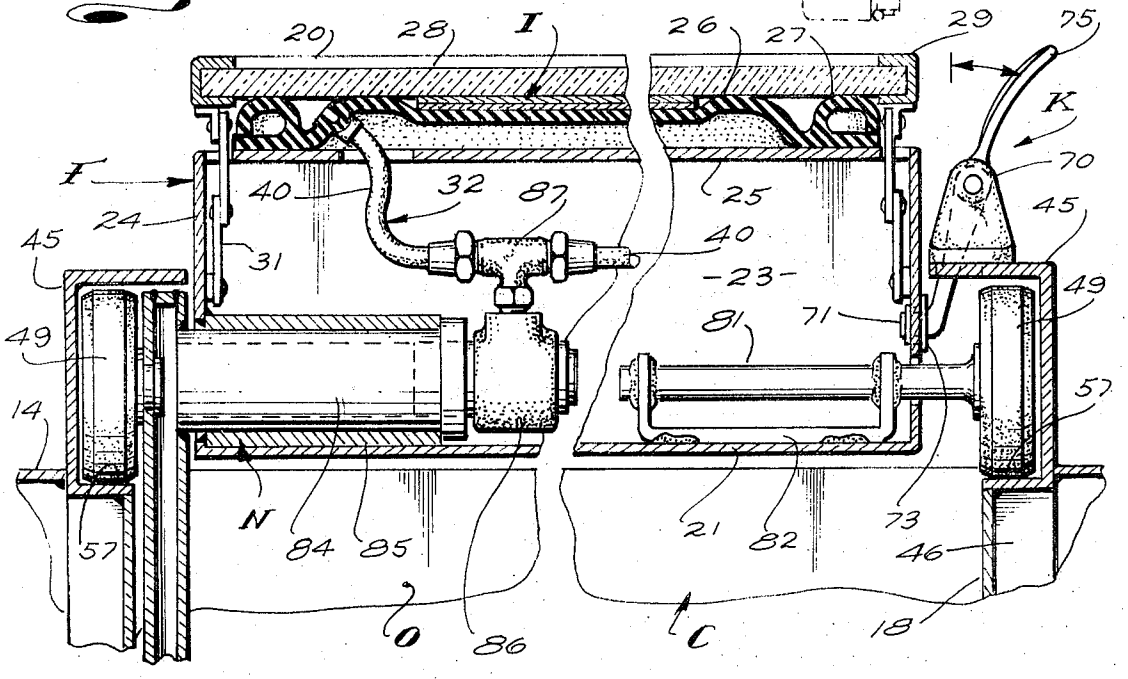
20
28
I
26
27
29
75
K
70
F
24
40
32
87
25
45
31
40
-23-
49
81
71
49
14
57
N
84
85
21
82
73
46
57
O
86
C
18

PHOTOGRAPHIC PLATE PRINTER

This invention has to do with a photographic offset plate printer and is more particularly concerned with improved mechanical means and structure for effecting contact printing and/or exposing of sensitized photoengraving offset plates and the like.

In the normal establishing of a finished photoengraving offset plate, a photographic negative of the work to be printed is established. The negative is then arranged adjacent the sensitized surface of a metallic offset plate and the assembly is exposed to light. The exposed plate is subsequently developed, as by acid etching and is suitably fixed to establish the finished plate, suitable for arrangement in a printing press and printing of the subject matter to which it was exposed.

The above briefly stated process of making offset plates is well known to those skilled in the art and requires no further consideration.

In order to effect clean, sharp and properly registered exposure of the plates, the negative must be securely held in tight intimate contact with the plate when being exposed so that relative shifting of negative and plate will not occur and so that air bubbles or pockets between the negative and plate will not occur or be present.

To the above end the prior art has developed and commonly uses what is commonly referred to as a printing frame to establish and maintain proper negative to plate engagement. The ordinary, conventional printing frame consists of a flat, rubber platen with a support surface, a plate glass cover pivotally carried by the frame and shiftable into and out of cover engagement with the support surface, sealing means about and between the perimeters of the platen and cover and vacuum or scavenging means to evacuate air from between the platen and cover whereby air between the negative and plate occurring between the platen and cover is evacuated and whereby the cover and platen are drawing by the vacuum (or urged by atmospheric pressure) into tight pressure and holding engagement with the related negative and plate.

The platen and cover in such frames are arranged in and carried by flat, box-like housings and the scavenging means is generally in the form of a vacuum pump spaced from the frame and connected therewith by suitable duct means.

Such printing frames are large heavy structures and are such that they cannot be safely and effectively manually carried about. Accordingly, such frames are commonly associated with other supporting or carrying structure which structure carries and has related to it a source of high intensity light utilized to expose the plates.

With due consideration given to size, weight, light source, convenience of use or operation and those other factors necessary for effective use of printing frames of the character referred to above, the prior art has developed a number of apparatuses or machines the purpose and/or function of which is to facilitate loading of the printing frames and exposing the loaded frames to an appropriate light source. The most effective of such machines or apparatus consists of a metal box-like cabinet with an opening in its top corresponding in configuration with the plane configuration of the printing frame, pivotal mounting means on a central axis of the printing frame and pivotally mounting the printing frame in the opening in the cabinet whereby the frame can be pivoted from a normal, work position where the support surface or top of the platen is disposed upwardly and is, upon pivoting the cover upwardly, made accessible for the purpose of arranging and positioning of materials to be exposed thereon, to an actuated, exposing position where the top surface of the platen is disposed downwardly, into the interior of the cabinet and toward and upwardly directed light source in the lower portion of the cabinet. The scavenging means includes a vacuum pump in the cabinet and ducting from the pump, through the pivotal mounting means to the printing frame.

The principal advantages found in the above prior art structure resides in the fact that a compact structure, conservative of space, is provided; the printing frame is pivotally supported in a balanced condition whereby it can be moved from one position to the other without difficulty or the exercise of appreciably manual force; the light source is protected and the printing frame is shielded from strong, ambient light when it is being exposed.

In the above noted structure and other similar structures provided by the prior art, the cabinets are provided with control panels accessible at the tops of the cabinets at one side of the printing frames. The control panels include manually operable light switches, manually adjustable timer control knobs for controlling the periods of exposure and certain other control levers and means, such as vacuum pump on and off switches, vacuum control valve levers or actuating switches therefor and the like.

In the normal use of these structures, it is often necessary that a person arranging materials (negatives and plates) on the top of the frames or platens, bend and lean over the frames to visually align the materials. Further, when the materials are arranged on the platens, the covers are lowered and a vacuum is drawn in the printing frames, it is necessary that the operator closely visually scan the top surface to be sure that all air pockets are removed. In thus scanning the top surface a magnifying glass is frequently employed and it is necessary that the operator again bend and lean over the top of the frame.

When operators bend and lean over the tops of the printing frames of the structures provided by the prior art, for the purpose of arranging materials thereon and/or for the purpose of visually scanning for air pockets, it is not infrequent that their bodies engage the control panels in such a way that one or more of the controls is actuated or moved out of adjustment, resulting in undesirable and often deleterious effects.

Still further, it is difficult and tiring for an operator to bend or lean over an ordinary, flat, horizontally disposed printing frame, when the glass cover is down, for the purpose of scanning for air pockets, without contacting and smearing the glass, with the result that the glass should or must be cleaned after scanning and before exposure.

An object and feature of my invention is to provide an improved offset plate printer of the general class referred to above which is such that when the printing frame is arranged with its top disposed upwardly, said frame occurs above the top of a related cabinet and a frame receiving opening thereon and is shifted horizontally relative to the cabinet whereby a portion of the frame projects laterally from one side of the cabinet for

easy and convenient access to the glass cover and to the top surface of the platen thereof.

A further object and feature of my invention is to provide a structure of the character referred to above wherein the cabinet is provided with a control panel at said one side thereof which panel is covered and protected by the printing frame when said frame is positioned above said cabinet and shifted horizontally relative thereto.

Still another object and feature of this invention is to provide a structure of the character referred to above wherein the printing frame can be tilted in an inclined position above the top and laterally of the side of the cabinet for the purpose of inspection or acanning of the materials arranged therein.

The foregoing and other objects and features of my invention will be fully understood and will be apparent from the following detailed description of a preferred form and embodiment of my invention throughout which description reference is made to the following accompanying drawings.

DESCRIPTION OF THE DRAWINGS

FIG. 1 is a perspective view showing the top, front and one side of my invention;

FIG. 2 is a sectional view taken substantially as indicated by line 2—2 on FIG. 1 and showing parts in different positions by dotted and phantom lines;

FIG. 3 is an enlarged sectional view of parts and portions of the structure shown in FIG. 2 of the drawings and showing parts in different positions by dotted and phantom lines;

FIG. 4 is an enlarged sectional view taken substantially as indicated by line 4—4 in FIG. 3.

The photographic printer that I provide includes a box-like cabinet C with flat, vertical, front side and rear walls **10, 11** and **12,** a bottom **13** and a flat horizontal top wall **14.** The top wall **14** has a substantially square or rectangular frame receiving opening O with flat, vertical front, rear and side surfaces **16, 17** and **18** of limited vertical extent.

The cabinet C is preferably established of sheet metal. The front, rear and side surfaces **16, 17** and **18** of the frame receiving opening in the top wall **14** are established by downwardly turned flange-like portions of the sheet metal establishing the top wall.

In practice, the front wall **10** is provided with movable panels to provide access to the interior of the cabinet.

The upper portion of the front wall **10** is formed to extend rearwardly and upwardly and thence upwardly to provide a forwardly and upwardly disposed and exposed control panel P at and extending laterally across the upper forward edge of the cabinet.

In the case illustrated, the top wall **14** is relieved across the front of the cabinet where the panel P occurs and the upper rear portion of the panel has a flat top **14'** which is spaced a short distance below the plane of the cabinet top **14.**

Within the lower portion of the cabinet C is arranged a light generating means or lamp L, a reflector means R below the lamp L and disposed to direct light from the lamp L, upwardly toward the opening O, a power pack A for the lamp L and a vacuum pump V, substantially as shown in FIG. **2** of the drawings.

The invention here provided next includes a flat printing frame F and mounting means M to pivotally and shiftably support the frame for normal positioning in a first position within the opening O with its top surface **20** disposed downwardly in spaced opposed relationship with the lamp L and reflector R, for positioning the frame in a second actuated or make-up position spaced above and forward of the opening O to overlie the panel P, with its top surface disposed upwardly and for positioning the frame in a third actuated or inspection position where its top surface is inclined and disposed forwardly and upwardly and where the foremost portion of the frame F occurs below the top plane of the cabinet and overlies and protects the panel P.

The above noted, normal, make-up and inspection positions of the frame F are shown in full, dotted and phantom lines in FIG. **2** of the drawings and are identified by the reference characters, **1st, 2nd** and **3rd.**

In FIG. **3** of the drawings, the frame F is shown in full lines in its **2nd** or make-up position; in dotted lines in its **1st** and **3rd** or normal and inspection positions and is shown in phantom lines in two intermediate positions between its **1st** and **2nd** positions.

The printing frame F employed in carrying out the present invention is that standard or conventional type of printing frame which has been adapted and is now commonly used throughout the art to which this invention pertains.

As shown throughout the drawings and as illustrated in some detail in FIG. **4** of the drawings, the frame F is a flat, rectangular, normally horizontally disposed structure or assemblage with flat top and bottom surfaces **20** and **21.** The bottom surface **21** is defined by the flat bottom panel of a opening box-like body B with flat, straight, normally vertical front, rear and side walls **22, 23** and **24.** The body B has a flat horizontal upper, support panel **25,** spaced above the bottom surface panel **21.** The noted box-like structure is established substantially as described to provide a rigid and flat, yet light-weight, supporting structure.

The frame next includes a flat, rectangular, flexible and resilient rubber platen **26** with an upwardly projecting pressure seal **27** about its perimeter and engaged on the support panel **25.** The outer edge portions of the platen are spaced from the edges of the panel **25** a limited distance and are suitably secured to the panel **25** as by means of a suitable cement or adhesive.

The top surface **20** of the frame F is established of a flat, horizontal, rectangular, glass panel **28** with a metal frame **29** about its perimeter. The panel **28** normally overlies the platen **26** with its bottom surface in pressure sealing engagement with the platen seal **27.**

The top surface defining framed, glass panel **28** is hingedly secured to the body B by suitable hinge means H at and between the upper rear edge of the body and the rear side of the frame **29** for the panel **28.**

In addition to the above, the frame F is provided with manually operated, releasable latch means **30** at and between the forward sides of the body B and glass panel frame **29;** articulated, collapsible, support means **31** and vacuum coupling means **32** related to the platen **26.**

The top surface **20,** or glass panel **28** is adapted to be pivoted upwardly and releasably supported in an up position by the support means **31,** when the frame is in the above noted **2nd** position, above and forwardly offset from the cabinet C, to provide free access to the platen **26,** as clearly indicated in dotted lines in FIG. **2** of the drawings.

When the frame F is arranged and opened in the manner set forth above, one or more stacks I of plates and negatives are arranged, as desired, on the platen.

When the stacks I are suitably arranged on the platen, the panel **28** is lowered into engagement with the platen seal **27**, is latched in secure relationship therewith and a vacuum is drawn, or air is evacuated frame between the panel **28** and the platen to draw and urge the platen into tight engagement with said panel, with the stack or stacks I in tight, flat and secure relationship therebetween.

The evacuation of air noted above is intended also to eliminate the existence of light refracting air bubbles and the like from between the panel **28** and the elements of the stacks I.

The evacuation of air, as above noted, is effected by the vacuum pump V in the cabinet C, which pump is suitably connected with the vacuum coupling means **32** of the platen **26**. The coupling means **32** is shown as including one or more flexible vacuum hoses **40** engaged through and fixed in the platen, inward of the seal **27**, to open at the top surface of the platen and communicate with the space between the platen and the panel **28** and depending from the platen, through suitable openings in the support panel **25** and into the interior of the body B, where they connect with elements of a suitable vacuum distributor means N, such as will hereinafter be described.

When the frame F is closed and the stacks I to be exposed are secured and held in the frame, as above noted, the top surface **20** of the frame is exposed to a source of intense light, to suitably expose the stacks I. Subsequent to exposure the frame is again opened, the stack or stacks I are removed and the negatives of the stacks are suitably developed and put to use.

The frame F thus far described is only typical of one form of printing frame that can be used in carrying out my invention and it is to be understood that the details of construction of the frame can be varied widely without departing from the spirit of my invention.

The mounting means M that I provide, which means affords and makes possible movement of the frame F relative to the cabinet C, to, from and between the above noted and illustrated 1st, 2nd and 3rd positions in a principal novel feature of the instant invention.

The means M, in the preferred form and carrying out of my invention, includes elongate, horizontal laterally inwardly opening primary U-shaped channels or guide-ways **45**, at the opposite sides **18** of the opening O in the cabinet C and extending forwardly from the central transverse or lateral axis of the opening O to near the forward ends of the sides **18** of the opening. The means M next includes elongate, laterally inwardly opening, downwardly and rearwardly inclined secondary, U-shaped channels or guide-ways **46** with upper forward opening receiving ends **47** adjacent the rear ends of the primary guide-ways **45** and forwardly and downwardly disposed access openings **48** at their lower rear ends.

The means M next includes primary support wheels or rollers **49** rotatably mounted at the opposite side walls **24** of the body B of frame F on the central transverse or lateral plane of the frame F and rollingly and supportedly engaged in the U-shaped primary guide-ways **45**. The guide-ways **45** are provided with rear stops **50** to engage and stop the rollers **49** on the central transverse axis of the opening O when the rollers **49** are moved to their rearmost extent in the primary guide-ways **45** and are provided with front stops **51** at the forward end of the guide-ways **45** to engage and stop or limit forward shifting and movement of the rollers **49**.

Further, the means M includes secondary guide wheels of rollers **55** rotatably mounted at the opposite side walls **24** of the body B of frame F, spaced rearward of the rollers **49** and near the rear ends of the side walls **24**. The guide rollers **55** are engageable in and out of the secondary guide-ways **46**, through the receiving and access openings **47** and **48** at the ends thereof, are shitable longitudinally thereof and are shiftably into and out of stopped engagement in a downwardly disposed receiver **56** at or adjacent the forward end of the primary guide-ways **45**.

The axes of the rollers **49** and **55** are near and immediately above the bottom surface **21** of the frame F and the rollers project downwardly from the plane of said surface **21** to a parallel plane spaced from or below said bottom surface. The rollers **49** and **55** are spaced well below and a substantial distance from the top surface **20** of the frame F, as clearly shown in the drawings.

The U-shaped, channel-like primary guide-ways **45** have roller supporting surfaces **57** defined by laterally inwardly projecting, longitudinal lower channel flanges. The roller support surfaces occur on a plane common with the top **14** of the cabinet, or as shown, on a plane a limited, predetermined distance below the top **14** of the cabinet and so that when the frame is arranged in the 2nd position with its top surface **20** disposed upwardly, as showing in solid lines in FIG. **3** of the drawings, the support rollers **49** support the frame F above the cabinet with its bottom surface in clear and spaced relationship above the top **14** of the cabinet.

As a result of the above noted relationship of parts, it will be apparent that when the frame F is in its noted 1st position, with its top surface disposed downwardly, as shown in full lines in FIGS. **1** and **2** of the drawings, the frame F is lowered relative to the support surfaces **57** of the guide-ways **45** and its downwardly disposed top surface **20** is on a plane spaced well below the top **14** of the cabinet C.

In the preferred form and carrying out of the invention, a substantial portion of the primary guide-ways **45** project above the top surface **14** of the cabinet, at the opposite sides thereof.

In practice, by supporting the rollers on struts and/or by employing larger rollers the guide-ways could be arranged below the top of the cabinet or the extent to which they project above the cabinet could be reduced.

The frame F is smaller in plane configuration than the opening O in the cabinet C and is such that when the frame is manually urged to its rearmost position relative to the cabinet, where the rollers **49** engage stops **50**, the frame F is in aligned register with the opening O and could, but for the rollers **49**, guide-ways **46** and receiver **56**, swing freely therein about the axes of the support rollers **49** and on its central transverse plane.

When the frame F is in its noted 1st position, with its top surface **20** disposed downwardly, it occurs down and within the opening O in the top of the cabinet, with said surface **20** disposed toward the lamp L and reflector R in the cabinet, preparatory for exposing stacks I

of plates and negatives carried by the frame to light emitted from the lamp.

When in the above noted 1st position, the guide rollers 55 occur at and slightly above the front portion of the opening O and are engaged in and stopped against upward, forward and rearward movement by the receivers 56. In the case illustrated, the receivers 56 are established by a forward extension of the laterally inwardly opening channel-shaped primary guide-ways 45, the forward sides of the front stops 51 in the guide-ways, front end walls 60 on the extension and spaced forward of the stops 51 and a downwardly disposed opening 61.

The receiver 56 serves to properly orient the frame F in the 1st, exposing position down and within the opening O in the cabinet.

When it is desired to shift the frame F from the 1st to the 2nd position, the foremost portion of the frame is manually urged and caused to swing downwardly and rearwardly in the cabinet, moving the guide rollers 55 out of engagement from the receiver 56 in the direction indicated by arrows W, through the access openings 48 of and into engagement in the secondary guide-ways 46.

When the rollers 55 engage in the guide-ways 46 the forward side 42 of the frame is moved and occurs in spaced relationship above the forward portion of the cabinet C in convenient position to be manually engaged and urged downwardly and forwardly. As the frame is thus urged or moved, the guide rollers 55 are guided forwardly and upwardly in the guide-ways 46, guiding and directing the rear portion of the frame forwardly and upwardly and the front portion of the frame forwardly and downwardly over the forward portion of the cabinet top 14 and to the 2nd position, as clearly indicated as shown in FIG. 3 of the drawings.

In practice, if desired, the lower rear ends of the guide-ways 46 can be provided with a rearwardly and upwardly inclined cam foot 65 which, when engaged by the rearwardly advancing rollers 55 urges the frame F upwardly and forwardly a sufficient extent or distance to cause the support rollers 49 to move forwardly and over small projections 66 on the surfaces 57 of the guide-ways 45 which projections are of sufficient extent to normally prevent the rollers 49 from prematurely and freely moving forward in the guide-ways 45.

In practice, the secondary guide-ways 46 could be curved rather than straight. Further, in practice, and without departing from the spirit of my invention, it is apparent that the guide-ways 46 could be curved and could be extended throughout the entire path of the guide rollers 55 and in which case they would substantially intersect with the forward ends of the primary guide-ways 45.

When the frame F is in the 2nd position noted above, it is stopped and releasably held in that position by suitable manually operable latch means K, which means will be considered in some detail in the following.

If it is desired not to afford or allow for tilting the frame F from the 2nd to the 3rd positions, the receiving openings 47 at the upper end of the guide-ways 46 can be eliminated and the upper ends of the guide-ways 46 can be closed.

It is important to note that when in the 2nd position, the front access or working side of the frame F projects from the front 10 of the cabinet C a sufficient distance to enable a worker to comfortably and conveniently work in extremely close proximity to the frame, there being adequate, clear, foot and leg space below the forward portion of the frame. Further, and more important, the control panel P at the front 10 of the cabinet, which panel is disposed upwardly and forwardly for convenient access, is covered and shielded or protected by the front portion of the frame F and cannot be accidentally or inadvertently engaged by the body of a workman or operator in such a a way as to disturb the control elements and/or devices on the panel P.

When the frame is in the 2nd position, it is most conveniently disposed for opening the frame and arranging stack I of plates and materials therein, that is, loading the frame, as noted above.

When the frame is loaded and it is desired to closely inspect it, as by means of a magnifying glass or the like, to be assured that air is not trapped in and about the stacks I, the frame is or can be tilted to its 3rd position which it is disposed forwardly and upwardly and at an angle where a person can conveniently lean over the top surface 20 and effect close and thorough examination of the loaded frame.

Moving the frame from the 2nd to the 3rd position is effected by releasing the latch means K and urging the front edge of the frame downwardly, whereupon the rollers 55 exit the guide-ways 46 through the openings 47 at the upper ends thereof. The frame F is stopped in its 3rd position when it engages the relieved top surface 14' across the front of the cabinet, as shown.

The latch means K includes a simple manually operable latch mechanism 70 carried by one of the primary guide-ways 45 in close proximity to, but spaced rearward of the forward end of the guide-way and has a laterally inwardly directed, laterally shiftable, bolt which is shiftable into and out of engagement in a pair of spaced apertured bolt plates 73 and 74 on the adjacent, opposing, side wall 24 of the frame body B. The bolt plates 73 and 74 are arranged so that when the frame F is in the 1st position, the bolt enters the plate 73 and so that when the frame F is in the 2nd position, the bolt enters the plate 74. With such an arrangement only one latch mechanism need be provided.

The latch in mechanism 70 is shown arranged at the top of the right-hand guide-way with a manually engageable handle 75 projecting upwardly therefrom and is arranged so that the bolt 71 occurs laterally inwardly of the roller 49 related thereto and above the axle or support shaft for the roller 49 whereby the latch means will not interfere with the free operation of the construction.

It is to be understood and it will be apparent that the latch means K illustrated and refered to above is only one form of latch means that can be advantageously employed to stop the frame in its noted set positions.

It is to be noted that the guide-ways 45 and 46 are set within and in part, supported by the sides 18 of the opening O in the cabinet to effect a satisfactory close tolerance between those sides of the opening and the opposing sides of the frame F. In so arranging the guide-ways, the sides 18 of the opening must be relieved or slotted, as shown in the drawings, to permit movement of the guide rollers 55 into and out of engagement in the receiver 56.

The guide rollers 55 and the right hand support rollers 49 are rotatably supported on shafts 81 mounted

within the frame body B by means of suitable brackets **82.** The shafts **81** project laterally outwardly through openings in the side walls of the body and support the rollers in lateral spaced relationship with the side walls.

The other or left-hand support roller **49** is shown related to and carried by the upper end of an elongate, vertical, flattened, tubular conductor arm **83** of the vacuum distributor means N. The upper end of the conductor **83** extends freely between the left sides **18** and **24** of the opening O and frame F and has a laterally inwardly projecting tubular axle member **84** extending through and rotatably engaged in a carrier sleeve **85** fixed in the frame body B concentric with the central rotary axis of the frame. The outer end of the axle member communicates with the conductor arm **83** and its inner end is connected and communicates with a swivel fitting **86.** The fitting **86** carries and communicates with a T-fitting **87,** which fitting connects and communicates with the hoses **40** of the vacuum coupling means **32** of the platen **26.**

The lower end of the arm depends below the lowermost path of the frame F (when the frame is rotated) and connects and communicates with an elongate, slack, flexible suction hose **88,** extending from a suction stand pipe **89** which communicates with the suction side of the vacuum pump V.

The left hand roller **49** is mounted on the outer side of the arm **83,** concentric with the member **84** and sleeve **85** to occur in proper engagement in its related guide-ways **45.**

With the means N set forth above, it will be apparent that the left hand roller **49** is related to and/or is carried by a suitable fluid handling swivel means or structure which effects connection and communication between the stationery vacuum pump V in the lower portion of the cabinet and the platen **26** in the frame F shiftably and rotatably supported at the upper portion of the cabinet.

The fluid handling swivel means illustrated and described above is a structurally simplified form of the sort or type of means which can be advantageously employed in carrying out my invention and is not intended as an illustration or description of a particular adapted means.

Referring to the panel P at and across the upward forward portion of the cabinet C, it is to be noted that the panel occurs in a forwardly and upwardly opening recess in the upper forward edge of the cabinet so that control elements and parts carried thereby do not project outward from the front and top planes of the of the cabinet and in such a manner that they are likely to be inadvertently interfered with. Further, the panel is upwardly and rearwardly inclined or disposed forwardly and upwardly whereby the control elements and parts carried thereby are most conveniently disposed for viewing and for manual engagement and operation.

In the case illustrated, the panel P is shown as carrying a manually engageable adjustable time **90** and a push button on-off switch **91** for the lamp L. The switch **91** energizes the lamp at low voltage whereby it is maintained warm and ready for high voltage, exposure output, say for example, 4,000 Watts. The panel next includes a push button exposure switch **92** and a signal light **93** which is on during exposure. The switch **92** is related to the timer **90** and the lamp L and serves to direct high voltage to the lamp for effecting the desired exposure of plates carried by the frame F. The light **93** is on during exposing.

The panel further includes a push-button on-off switch **94** for the vacuum pump P, a pair of push-button switches **95** and **96** for operation of vacuum control valve means operable to establish and release vacuum in the frame F and a signal lamp **97** to warn of premature loss of vacuum.

In practice, the vacuum control valve means, under control of switches **95** and **96,** or other similar switching means, can vary widely in form and construction without in any way affecting the novelty of this invention. In FIG. **2** of the drawings, for purposes of illustration, I have shown a box-like unit **98** at the pump V which unit can contain necessary and appropriate valving means for effectively carrying out my invention.

Having described but one preferred form and carrying out of my invention, I do not wish to be limited to the specific details hereinabove set forth, but wish to reserve to myself any modifications and/or variations in and to the structure disclosed that may appear to those skilled in the art and which fall within the scope of the following claims:

Having described my invention, I claim:

1. A plate printer comprising a cabinet with front, rear and side walls and a flat horizontal top with an opening therein, a light source within the cabinet below opening, a printing frame with a normally horizontal top exposing surface and a bottom surface, mounting means for mounting the frame to the top of the cabinet for pivotal and forward movement of the frame from normal exposure position within the opening with the top surface disposed downwardly to an actuated make up position above and forwardly offset from the cabinet top with the top surface disposed upwardly, said mounting means including laterally spaced elongate horizontal and forwardly extending primary guide-ways adjacent opposite sides of the opening, elongate secondary guide-ways extending downwardly and rearwardly from near the rear ends of the primary guide-ways, support rollers at the sides of the frame near the central lateral axis of the frame and engaged with the primary guide-ways and guide rollers spaced from the primary rollers and engageable with the secondary guide-ways.

2. A structure as set forth in claim **1** including stop means near the front end of the primary guide-ways to engage and stop the guide rollers when the frame is in its normal position.

3. A structure as set forth in claim **1** including stops at the ends of the primary guide-ways to engage and stop the support roller when the frame is in its normal and actuated positions.

4. A structure as set forth in claim **1** including stop means near the front end of the primary guide-ways to engage and stop the guide rollers when the frame is in its normal position, rear and front stops at the ends of the primary guide-ways to engage and stop the support rollers when the frame is in its normal and actuated positions.

5. A structure as set forth in claim **4** wherein the primary guide-ways have roller engaging support surfaces below the top plane of the cabinet and said support rollers project down from the plane of the bottom surface and are spaced down from and are clear of the plane of the top surface whereby the frame occurs within said

opening when in its normal position and occurs above the cabinet top when in its actuated position.

6. A structure as set forth in claim **1** wherein the primary guide-ways have roller engaging support surfaces below the top plane of the cabinet and said support rollers project down from the plane of the bottom surface and are spaced down from and are clear of the plane of the top surface whereby the frame occurs within said opening when in its normal position and occurs above the cabinet top when in its actuated position.

7. A plate printer comprising a cabinet with front, rear and side walls and a flat longitudinal top with an opening therein, a light source within the cabinet below the opening, a printing frame with a normally horizontal top exposing surface and a bottom surface, mounting means for mounting the frame to the top of the cabinet for pivotal and forward movement of the frame from a normal exposure position within the opening with the top surface disposed downwardly to an actuated make-up position above and forwardly offset from the top of the cabinet with the top surface disposed upwardly, said mounting means including laterally spaced elongate horizontal and forwardly extending primary guide-ways adjacent opposite sides of the opening, support rollers at the sides of the frame near the central lateral axis of the frame and engaged with the primary guide-ways to shift forwardly and rearwardly therein and rotatably supporting the frame, guide rollers at the sides of the frame spaced forward of the support rollers when the frame is in its normal position and secondary guide-ways within the cabinet to engage the guide rollers and to direct the frame forwardly relative to the cabinet when the frame is rotated about the axis of the support rollers.

8. A structure as set forth in claim **7** including stop means near the front end of the primary guide-ways to engage and stop the guide rollers when the frame is in its normal position.

9. A structure as set forth in claim **7** including stops at the ends of the primary guide-ways to engage and stop the support rollers when the frame is in its normal and actuated positions.

10. A structure as set forth in claim **7** including stop means near the front end of the primary guide-ways to engage and stop the guide rollers when the frame is in its normal position, rear and front stops at the ends of the primary guide-ways to engage and stop the support rollers when the frame is in its normal and actuated positions.

11. A structure as set forth in claim **10** wherein the primary guide-ways have roller engaging support surfaces below the top plane of the cabinet and said support rollers project down from the plane of the bottom surface and are spaced down from and are clear of the plane of the top surface whereby the frame occurs within said opening when in its normal position and occurs above the cabinet top when in its actuated position.

* * * * *