P/00/001 28/5/91
Section 29

AUSTRALIA

Patents Act 1990

PATENT REQUEST: STANDARD PATENT/PATENT OF ADDITION

We, being the persons identified below as the Applicant, request the grant of a patent to the person identified below as the Nominated Person, for an invention described in the accompanying standard complete specification.

Full application details follow.

[71] Applicant: EMHART GLASS MACHINERY INVESTMENTS INC.

Address: RL&F SERVICE CORPORATION, 1 RODNEY SQUARE, 10TH FLOOR, 10TH & KING STREETS, WILMINGTON, DELAWARE 19801, UNITED STATES OF AMERICA

[70] Nominated Person: EMHART GLASS MACHINERY INVESTMENTS INC.

Address: RL&F SERVICE CORPORATION, 1 RODNEY SQUARE, 10TH FLOOR, 10TH & KING STREETS, WILMINGTON, DELAWARE 19801, UNITED STATES OF AMERICA

[54] Invention Title: MOUNTING MEANS FOR A BAFFLE OR THE LIKE ON A GLASSWARE MANUFACTURING MACHINE

[72] Name(s) of actual inventor(s): WILLI MEYER and JOHANN ZSIFKOVITS

[74] Address for service in Australia: c/o WATERMARK PATENT & TRADEMARK ATTORNEYS, of 290 Burwood Road, Hawthorn, Victoria 3122, Australia Attorney Code: WM

BASIC CONVENTION APPLICATION(S) DETAILS

[31] Application Number	[33] Country	Country Code	[32] Date of Application
9319193.0	UNITED KINGDOM	GB	16 SEPTEMBER 1993

Basic Applicant(s): EMHART GLASS MACHINERY INVESTMENTS INC.

Drawing number recommended to accompany the abstract .....

By our Patent Attorneys,
WATERMARK PATENT & TRADEMARK ATTORNEYS

.....

L. J. Dyson
Registered Patent Attorney

DATED this 14th day of September 1994.

M060039 150994

P/00/008b 12/11/91
Section 29 (1)
Regulation 3.1 (2)

AUSTRALIA

Patents Act 1990 670711

NOTICE OF ENTITLEMENT

We, EMHART GLASS MACHINERY INVESTMENTS INC. of, RL & F SERVICE CORPORATION, 1 RODNEY SQUARE, 10TH FLOOR, 10TH & KING STREETS, WILMINGTON, DELAWARE 19801, UNITED STATES OF AMERICA being the applicant in respect of Application No. 73015/94 state the following:-

The Person nominated for the grant of the patent has entitlement from the actual inventors, WILLI MEYER AND JOHANN ZSIFKOVITS by assignment.

The person nominated for the grant of the patent is the applicant of the basic application listed on the patent request form.

The basic application listed on the request form is the first application made in a Convention country in respect of the invention.

EMHART GLASS MACHINERY INVESTMENTS INC.

By our Patent Attorneys,
WATERMARK PATENT & TRADEMARK ATTORNEYS

.....

L. J. Dyson

Registered Patent Attorney

27 May 1996

AU9473015

(12) PATENT ABRIDGMENT (11) Document No. AU-B-73015/94
(19) AUSTRALIAN PATENT OFFICE (10) Acceptance No. 670711

(54) Title
MOUNTING MEANS FOR A BAFFLE OR THE LIKE ON A GLASSWARE MANUFACTURING MACHINE

International Patent Classification(s)
(51)[5] C03B 009/14
(51)[6] C03B 009/353

(21) Application No. : 73015/94 (22) Application Date : 15.09.94

(30) Priority Data

(31) Number	(32) Date	(33) Country
9319193	16.09.93	GB UNITED KINGDOM

(43) Publication Date : 30.03.95

(44) Publication Date of Accepted Application : 25.07.96

(71) Applicant(s)
EMHART GLASS MACHINERY INVESTMENTS INC.

(72) Inventor(s)
WILLI MEYER; JOHANN ZSIFKOVITS

(74) Attorney or Agent
WATERMARK PATENT & TRADEMARK ATTORNEYS , Locked Bag 5, HAWTHORN VIC 3122

(56) Prior Art Documents
US 3566494

(57) Claim

1. A mounting means for use in a glassware forming machine for moving an operative member between an out of the way position and an operative position in alignment with a mould cavity opening of a mould of the machine the machine comprising a vertically extending operating shaft (6) which is arranged to perform axial and rotary movements and a parallel vertically extending support shaft (8), the mounting means comprising

a head (38) for supporting the operative member

a first link (120) having a first end portion (122) secured to the operating shaft (6) and a second end portion pivoted to the head

a second link (156) having a first end portion (158) rotatably mounted on the supporting shaft (8) and a second end portion pivoted to the head (38)

the two links and the head forming a parallel linkage

the arrangement being such that

the first link (10) is capable ot adjustment up and down on the operating shaft (6) and comprises means (18,131) which co-operates with the shaft to maintain the link (120) in a desired angular relationship to the shaft

the first end portion (122) of the first link comprises a cutaway portion (132),

.../2

and the first end portion (158) of the second link has a boss which extends into the cutaway portion (132) and is supported by closely fitting bearing blocks (136,138) in the cutaway portion (132)

and the operative member is supported on the head (38) by a releasable device (84,92) which ensures that the operative member is maintained in a desired angular relationship with the head.

P/00/011 20/5/91
Regulation 3.2(2)

AUSTRALIA

Patents Act 1990

ORIGINAL

COMPLETE SPECIFICATION

STANDARD PATENT

Application Number:

Lodged:

Invention Title: MOUNTING MEANS FOR A BAFFLE OR THE LIKE ON A GLASSWARE MANUFACTURING MACHINE

The following statement is a full description of this invention, including the best method of performing it known to us :-

Mounting Means For A Baffle Or The Like In A Glassware Manufacturing Machine

This invention is concerned with mounting means for use in a glassware manufacturing machine for an operative member such as a funnel, as a baffle or a blowhead.

In a glassware manufacturing machine of the so-called "individual section" type, it is necessary to move operative members between out-of-the-way positions out of alignment with an opening of a cavity of a mould of the machine and operative positions in which the operative member is in alignment with the opening of the cavity and in close proximity thereto. For example, each section of the machine comprises a blank mould in which parisons are formed from gobs of molten glass, by either a pressing or a blowing operation, and it is necessary to move a funnel into alignment with the mould opening so that the funnel can guide a gob into the mould cavity. The funnel is then moved to an out-of-the-way position, to allow a baffle to close the mould cavity opening, The baffle is moved in a similar manner to the funnel in relation to the blank mould. A blowhead, though which air is blown into a finishing mould of the section and in which parisons transferred to the finish mould from the blank mould are blown into articles of glassware, is moved in a similar manner.

Conventional moving means for moving the funnel baffle and blowhead of a machine of the individual section type operates in a similar manner in each case. The moving means comprises a vertically disposed piston and cylinder assembly having a piston with two integral piston rods. One piston rod extends vertically-upwards providing a vertically-extending shaft on which the mounting means for the operative member is mounted for movement with the shaft.

The other piston rod extends vertically downwards and carries a cam follower which engages a cam track shaped so that, during part of the movement of the piston along the cylinder, it is caused to turn so that the first-mentioned piston rod turns about a vertical longitudinal axis thereof. The mounting means for the operative member comprises an arm which extends horizontally and on which the operative member is mounted and clamping means by which the mounting means is clamped to the vertically-extending shaft so that the mounting means moves with the shaft. The arrangement is, thus, such that movement of the piston causes the upwardly-extending piston rod to move vertically and to turn about its longitudinal axis so that the operative member makes a movement which has a rotary component about a vertical axis and a linear component in a vertical direction, the linear component moves the operative member towards or away from the opening of the mould cavity while the rotary component moves it into or out of alignment with the opening.

It is necessary that the operative member, whether it be a blowhead, funnel or baffle, be consistently accurately located with respect to the mould if consistently good articles of glassware are to be produced. It is also desirable that fine adjustments to the operative position of the operative members can be made initially to obtain this accurate location. Further it is desirable that one operative member can without difficulty be replaced by another (whether it be for repair purposes or to enable a different article of glassware to be made) and the height of the operative member adjusted without requiring setting up or fine adjustment to the mounting means. In US 3586494 a baffle mechanism in an individual section glassware manufacturing machine is described which comprises a vertically extending operating shaft, which is arranged to

perform axial and rotary movements, and a parallel vertically extending support shaft. The mounting means for the baffle comprises a head for supporting the baffle, a first link having one end portion secured to the operating shaft and the other pivoted to the head, a second link having one end portion rotatably mounted on the supporting shaft and the other end portion pivoted to the head, the two links and the head forming a parallel linkage. This arrangement has the advantage that once it is set up, the parallel linkage obtains a consistent and accurate location of the baffle in its operative position on repeated use of the mechanism. However, if it is wished to exchange one set of baffles for another considerable difficulty is encountered. Firstly, to exchange the baffles the baffle head must be disassembled from the two links and a new one reassembled. To ensure that any manufacturing tolerances in the new head are allowed for, it may be necessary to make a fine adjustment to the length of the second link. It may also be necessary to adjust the height of the baffle head. This is achieved by releasing the first link from the operating shaft and re-securing it to the shaft at the required height. Before finally securing the first link to the operating shaft, its orientation with respect to the shaft must be carefully checked to ensure that the operative position of the baffle is correct.

It will be seen that changing the baffle head in the aforesaid mechanism is a lengthy and time consuming operation.

It is one of the objects of the present invention to provide a mounting means for an operative member which is not only consistent and accurate in operation but which also allows for the convenient exchange of operative members and adjustment of their operating position.

The present invention provides a mounting means for use in a glassware forming machine for moving an operative member between an out of the way position and an operative position in alignment with a mould cavity opening of a mould of the machine the machine comprising a vertically extending operating shaft which is arranged to perform axial and rotary movements and a parallel vertically extending support shaft, the mounting means comprising

a head for supporting the operative member

a first link having a first end portion secured to the operating shaft and a second end portion pivoted to the head

a second link having a first end portion rotatably mounted on the supporting shaft and a second end portion pivoted to the head

the two links and the head forming a parallel linkage

the arrangement being such that

the first link is capable of adjustment up and down on the operating shaft and comprises means which co-operates with the shaft to maintain the link in a desired angular relationship to the shaft

the first end portion of the first link comprises a cutaway portion, and the first end portion of the second link has a boss which extends into the cutaway portion and is supported by closely fitting bearing blocks in the cutaway portion

and the operative member is supported on the head by a releasable device which ensures that the operative member is maintained in a desired angular relationship with the head.

Two mounting means for a baffle will now be described with reference to the accompanying drawings. The second mounting means is a preferred embodiment which illustrates the invention by way of example.

In the drawings:

Figure 1 shows a plan view of the first mounting means with a baffle head in its operative position;

Figure 2 shows a plan view corresponding to Figure 1 with the baffle head in its out of the way position;

Figure 3 shows a view, partly in section along the line III-III of Figure 1 of the first mounting means attached to an operating shaft;

Figure 4 shows a front view of the baffle head;

Figure 5 shows diagrammatically an exploded view of a releasable device by which the baffle head is secured to the first mounting means;

Figure 6 shows a plan view of part of an alternative construction of mounting means; and

Figure 7 shows a view in section along the line VII - VII of Figure 6.

The first mounting means shown in Figure 1 is for use in a glassware forming machine, conveniently of the individual section type and is provided for moving an operative member, in the form of a baffle head 2 comprising three baffles 4 between an out of the way position and an operative position in which the baffles 4 are in alignment with mould cavity openings (not shown) of a parison mould of the machine. The baffle head 2 is for use with a triple gob machine and consequently comprises three baffles 4 corresponding with three mould cavities (not shown).

The glassware forming machine comprises a vertically extending operating shaft 6 which is caused, by a conventional piston and cylinder device (not shown) to perform axial and rotary movements, and a parallel, vertical, support shaft 8.

The mounting means comprises a first link 10 which has a first end portion 12 having a circular bore 13 which surrounds the shaft 6 and comprises a vertical slot 14. A bolt 16 extending across the slot 14 secures the link 10 to the shaft 6. Means, in the form of a key 18 secured to the shaft 6 and a vertical keyway 21 opening into the bore 13 of the end portion 12 is provided between the shaft 6 and the link 10 and serves to maintain the link 10 in a desired angular relationship with the shaft 6. The link 10 may be adjusted up and down the shaft 6 maintained in the same

orientation with respect to the shaft by slackening bolt 16, moving the link 10 and then tightening the bolt.

The first end portion 12 of the link 10 comprises two lugs 20,22 which extend circumferentially of the shaft 6 generally opposite the slot 14. These lugs are spaced apart vertically and each comprise an arcuate slot 24 which is centred on the shaft 6 and surrounds the shaft 8 and is of such a size that the lugs 20 22 may move freely past the shaft 8 without excessive play between the shaft 8 and the slots 24.

A second end portion 26 of the link 10 comprises two vertically spaced lugs 28, 30 each provided with bores 32, 34. A pin 36 extends through the bores 32,34 and a bore 40 in a support head 38 on which the baffle head is supported, thus pivoting the support head 38 to the first link 10. Appropriate bearing lugs are provided between the pin 36, the support head 38 and the link 10. A cover plate 42 is secured to the end portion 26 over the pin 36 by screws 44.

A second link 46 comprises a first end portion having a boss 48 rotatably and slidably mounted on the supporting shaft 8, with effectively no play. The boss 48 fits closely between the lugs 20 and 22 and bearing members 50 ensure free movement between the lugs 20,22 and the boss 48. The link 46 comprises a second end portion in the form of an arm 52 which extends into a slot 54 in the support head 38. A pivot pin 56 has concentric portions 58,60 which lie in co-axial bores of the support head 38, and an eccentric portion 62 which lies in a bearing 63 in a bore in the arm 52. The pin 56 has a hexagon head 64. A plate 66 overlies a flange of the head 64 and is secured by screws 68 to the support member 38. If the screws 68 are slackened, the pin 56 can be rotated, to obtain a fine adjustment of the

effective length of the second link 46 - and this adjustment may be preserved by tightening the screw 68 thus to make the plate 66 clamp the pin 56 in adjusted position. Alternatively a turn buckle could be provided to provide such fine adjustment.

It can thus be seen that the two links 10 and 46 and the support head 38 of the head 2 form a parallel linkage, and the first link, when adjusted up and down the shaft 6, is maintained in its desired angular relationship with the shaft, and such adjustment causes the link 46 to slide along the shaft 8 and carry the baffle head 2 with the links. Further, the location of the boss 48 of the second link 46 between the lugs 20 and 22 ensures that the link 46 moves precisely with the link 10 on up and down movement of the shaft 6.

The baffle head 2 is mounted on the support head 38. The support head 38 is provided with a T slot 70. The baffle head 2 comprises a supporting block 72 which is generally T shaped in plan and comprises a transverse portion 74 and a central lug portion 76. The lug portion 76 comprises an upwardly extending portion 78 (see Figure 5) and is provided with transversely extending lugs 80 which are positioned above and below a transverse channel 82 and adapted to fit into the T slot 70. A locking member 84 which comprises transversely extending lugs 86 which also fit into the T slot 70 is provided with a threaded stem 88 which passes through a bore 90 in the portion 78, and is positioned as a fairly close fit in the channel 82. A nut 92 and locking washer 94 secure the member 84 in position in the channel 82. When the member 84 is so positioned in the channel 82 that the lugs 80 and 86 (which are the same size) are aligned, the supporting block 72 can be adjusted vertically with respect to the support member 38. On

tightening the nut 92 the locking member 84 is drawn towards the portion 78, its thickness being slightly less than the depth of the channel 82, and the lugs 86 are forced against forward faces of the T slot 70, thus to clamp the block 72 securely in position.

The supporting block 72 comprises two upwardly extending lugs 96 between which is pivoted a balancing arm 98. The arm 98 is pivoted so that a portion 100 on one side of the pivot is twice the length of a portion 102 on the other side of the pivot. A second balancing arm 104 is pivoted at its mid point on the portion 102 of the balancing arm. End portions of the arm 104 and of the portion 100 of the arm 98 engage the baffles 4 which are mounted equally spaced in bores in the block 72, thus providing a balancing mechanism for the baffles when they are brought into engagement with the moulds.

The mounting means has been described as used in conjunction with a baffle head. It can also be used in conjunction with a funnel, or a blow head. To enable air to be supplied to the operative member, for example to supply settle blow air to a baffle head or final blow air to a blow head the mounting means is provided with air supplied through the shaft 6, a transverse passage 106 in the link 10, a central passage 108 through the pin 36, and a mounted passage 110 through the support member 38. In the mechanism described, where air is not required at the baffle head, no further extension of the air passageway is shown.

A second construction of the mounting means which is preferred and embodies the invention is shown in Figures 6 and 7. This second construction differs from the first mounting means only in the inter connection between links of the mounting means, and

identical parts in the two constructions will be identified by the same numbers.

The second mounting means comprise a first link 120 having a first end portion 122 having a circular bore 123 which surrounds the shaft 6 and comprises a vertical slot 124. A bolt 126 extending across the slot 124 secures the link 120 to the shaft 6. A key 18 secured to the shaft 6 lying in a keyway 131 maintains the link 120 in a desired angular relationship with the shaft 6, and it may be adjusted up and down the shaft 6 in exactly the same way as the link 10.

The first end portion 122 comprises a cut away portion 132 in which are secured, by bolts 134, upper and lower arcuate bearing blocks 136, 138.

A second link 156 comprises a first end portion 158 which is rotatably and slidably mounted on the supporting shaft 8 with effectively no play. The first end portion 158 is the form of a boss having a bore 160 positioned on the shaft 8. The boss extends into the cut away portion 132 between the bearing blocks 136, 138, and bearing rings 162, 164 secured to the boss 158 by pins 166 fit closely and slidably against the blocks 136, 138 respectively. Scraping oil seals 168 are provided in annular recesses in the bore 160.

The two links 120, 156 support a support head 38 and a baffle head 2 in the same manner as the links 10 and 46 of the first mounting means. It can thus be seen that the two links 120 and 156, together with the support head 38, form a parallel linkage, and the first link 120 when adjusted up and down the shaft 6 is maintained in desired angular relationship with the shaft. Such adjustment causes the

link 156 to slide on the shaft 8, and the location of the boss 158 of the second link 156 between the bearing blocks 136, 138 ensures that the link 156 moves precisely with the link 10 on up and down movement of the shaft 6.

THE CLAIMS DEFINING THE INVENTION ARE AS FOLLOWS:

1. A mounting means for use in a glassware forming machine for moving an operative member between an out of the way position and an operative position in alignment with a mould cavity opening of a mould of the machine the machine comprising a vertically extending operating shaft (6) which is arranged to perform axial and rotary movements and a parallel vertically extending support shaft (8), the mounting means comprising

a head (38) for supporting the operative member

a first link (120) having a first end portion (122) secured to the operating shaft (6) and a second end portion pivoted to the head

a second link (156) having a first end portion (158) rotatably mounted on the supporting shaft (8) and a second end portion pivoted to the head (38)

the two links and the head forming a parallel linkage

the arrangement being such that

the first link (10) is capable of adjustment up and down on the operating shaft (6) and comprises means (18,131) which co-operates with the shaft to maintain the link (120) in a desired angular relationship to the shaft

the first end portion (122) of the first link comprises a cutaway portion (132), and the first end portion (158) of the second link has a boss which extends into the cutaway portion (132) and is supported by closely fitting bearing blocks (136,138) in the cutaway portion (132)

and the operative member is supported on the head (38) by a releasable device (84,92) which ensures that the operative member is maintained in a desired angular relationship with the head.

2. Mounting means according to claim 1 characterised in that the first end portion (122), of the first link (120), is clamped to the shaft by means of a bolt and an axially extending Key and Keyway (18,131) is provided between the shaft and the first end portion to maintain the shaft and the first link in the desired angular relationship.

3. Mounting means according to one of claims 1 and 2 wherein means are provided to provide for fine adjustment of the effective length of one of the links.

4. Mounting means according to any one of the preceding claims characterised in that one of the pivots by which the head is supported on the two links is an eccentric pin.

5. Mounting means according to any one of the preceding claims characterised in that the releasable device is provided by a tongue and groove connection between the head and the operative member which ensures the head and the member are in a desired angular relationship, and a readily releasable bolt which serves to clamp the operative member to the head.

DATED this 27th day of May 1996

EMHART GLASS MACHINERY INVESTMENTS INC.

WATERMARK PATENT & TRADEMARK ATTORNEYS
290 BURWOOD ROAD
HAWTHORN VICTORIA 3122
AUSTRALIA

LJD:RJD:KR Doc 7 AU7301594.WPC

Abstract

Mounting means for a baffle or the like in a glassware manufacturing machine.

A mounting means for use in a glassware forming machine for moving an operative member, such as a funnel, baffle or blowhead, between an out of the way and operative positions. The machine comprises a vertical operating shaft and a parallel support shaft, and the mounting means comprises a first link adjustably mounted on the operating shaft and a second link slidably mounted on the support shaft. The two links are both pivoted to a head and form a parallel linkage with it. Means, for example a key and keyway, maintains the first link in a desired angular relationship with the operating shaft. The head is provided with a releasable device by which the operative member may be secured to the head in a desired angular relationship.

73015/94

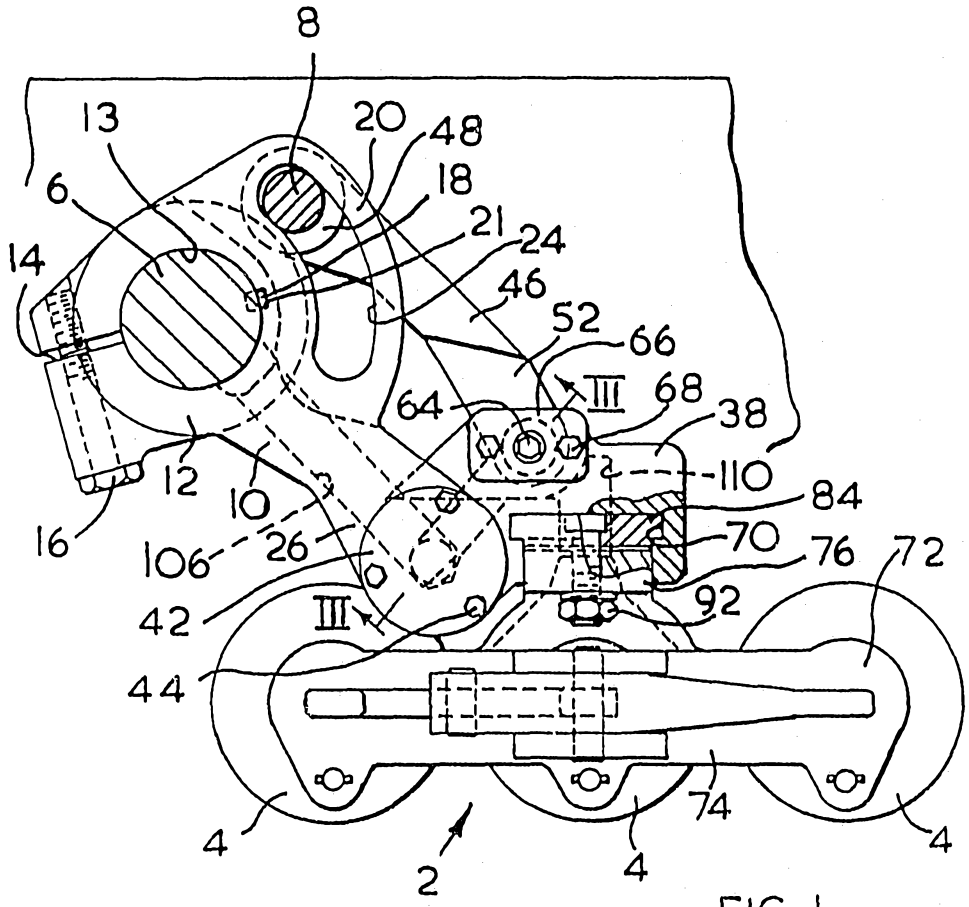

FIG. 1

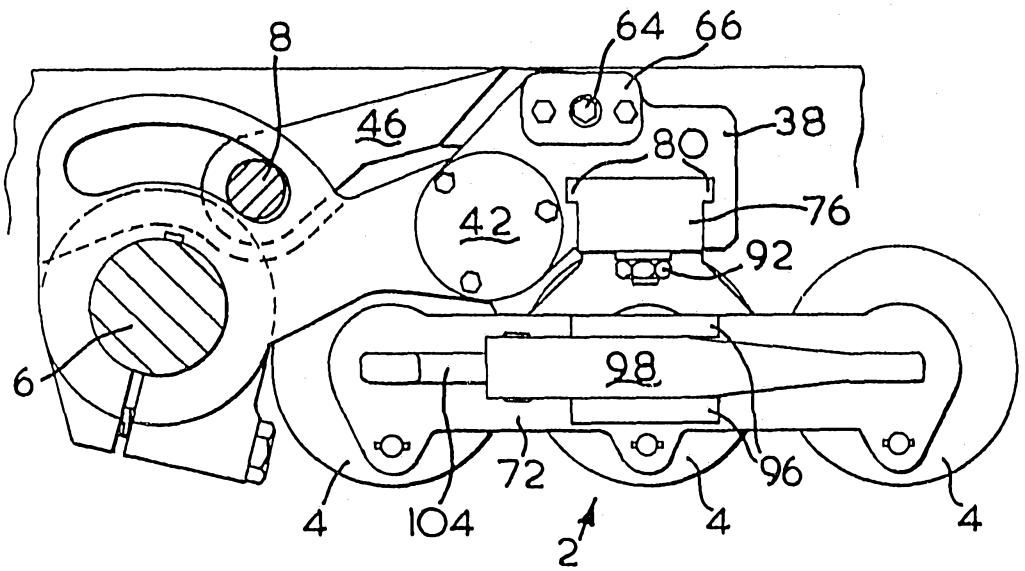

FIG. 2

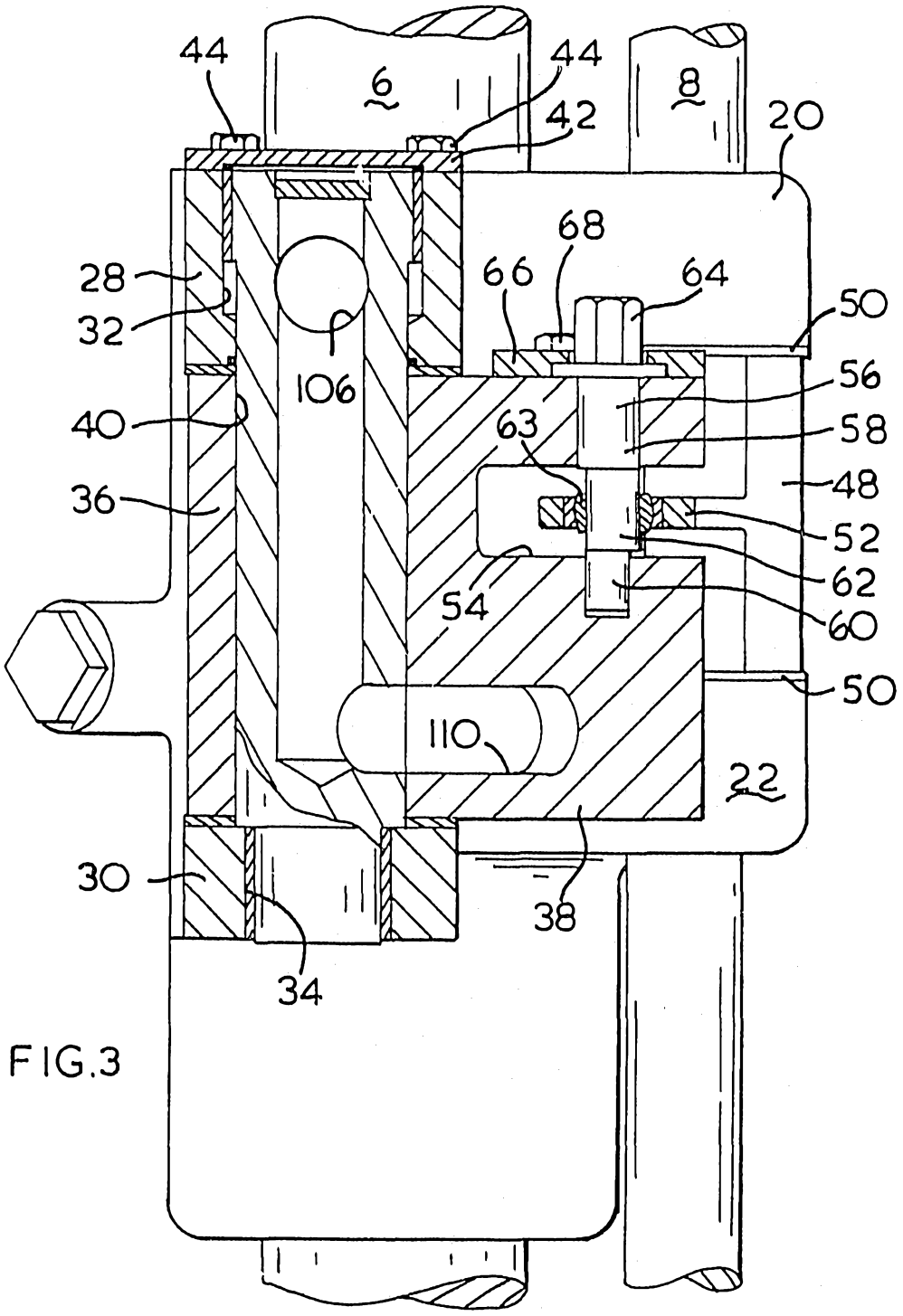
44
44
42
6
8
20
68
66
64
28
32
106
50
56
40
63
58
48
36
52
62
54
60
50
110
22
30
38
34

FIG.3

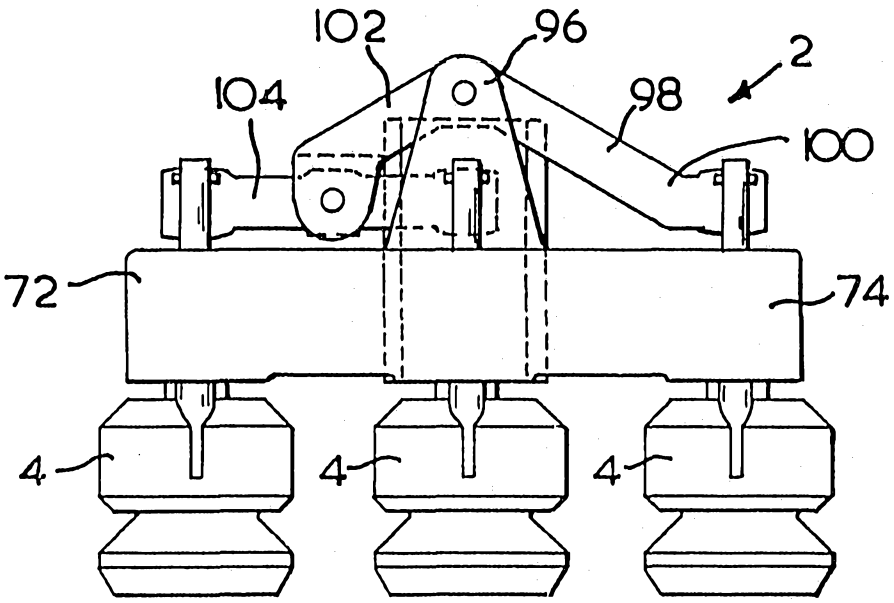

FIG. 4

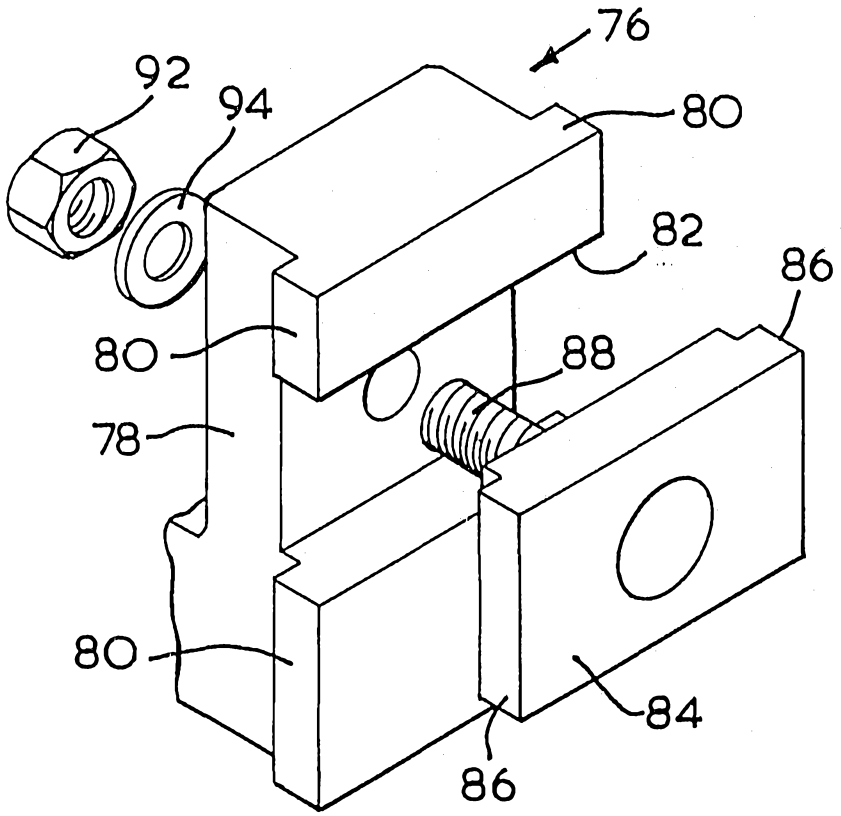

FIG. 5

73015/94

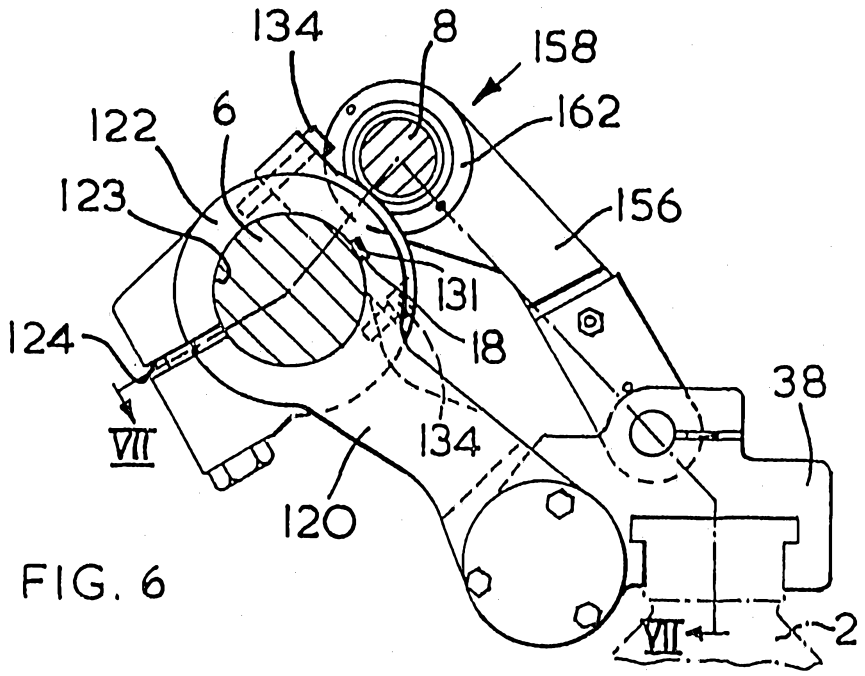

FIG. 6

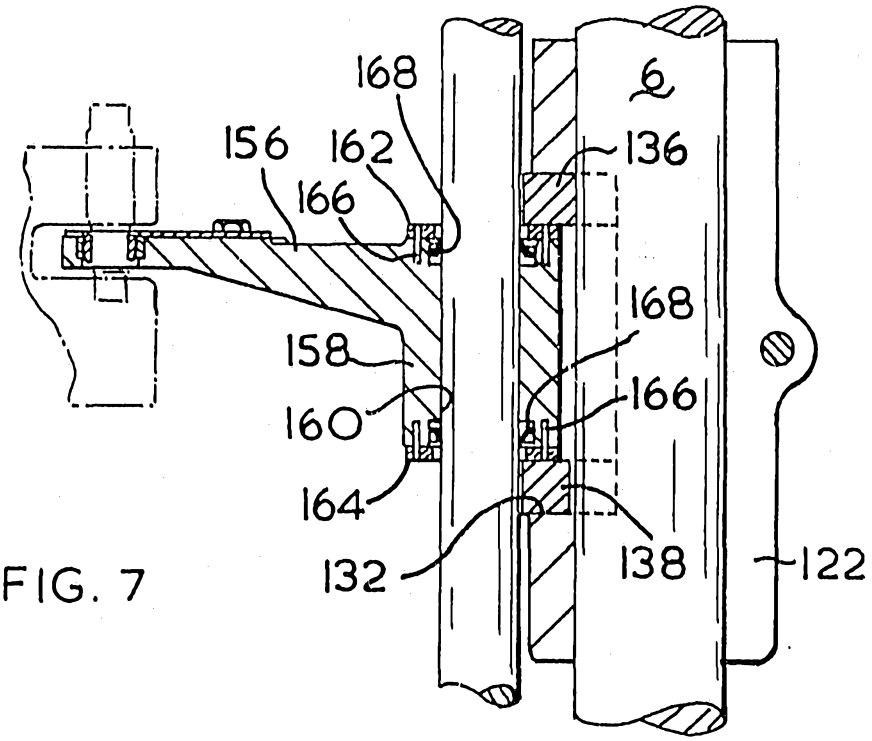

FIG. 7