SPORTS BOOT CLOSURE CONSTRUCTION

Filed March 29, 1961 4 Sheets-Sheet 1

Fig. 1

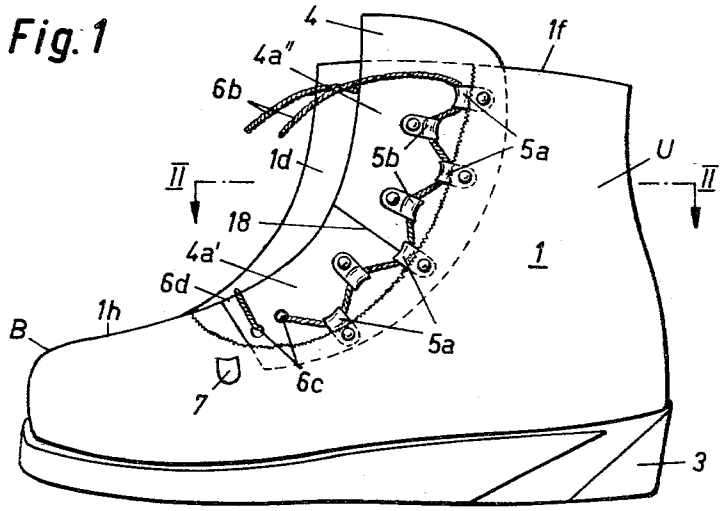

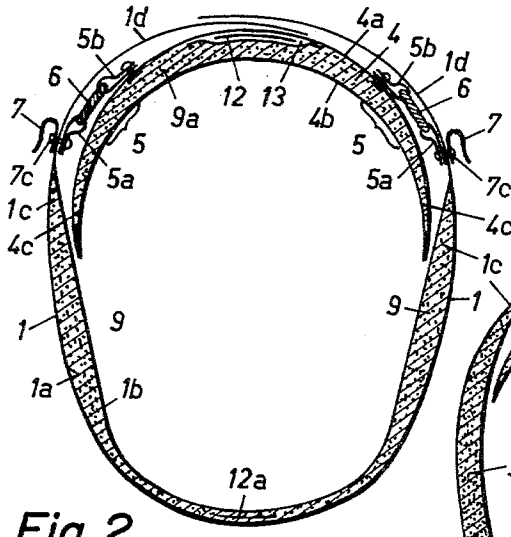

Fig. 2

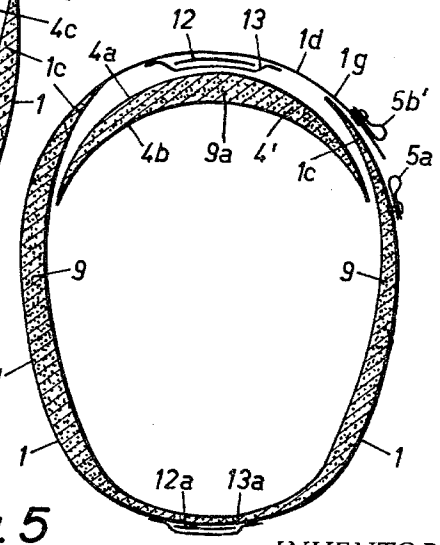

Fig. 5

INVENTOR.
FRANZ FESL
BY Werner W. Kleeman
ATTORNEY

SPORTS BOOT CLOSURE CONSTRUCTION

Filed March 29, 1961 4 Sheets-Sheet 2

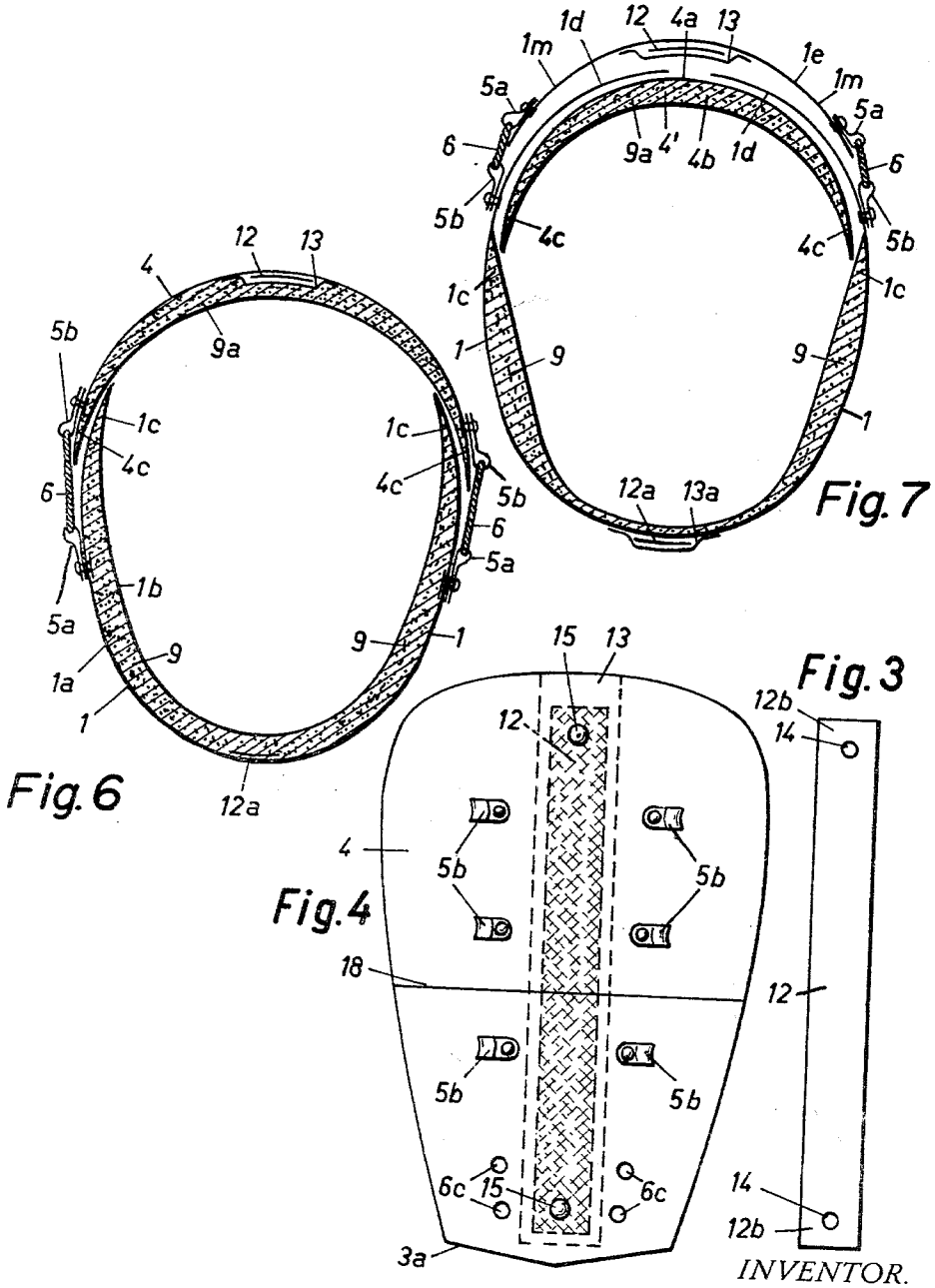

INVENTOR.
FRANZ FESL
BY Werner W. Kleeman
ATTORNEY

SPORTS BOOT CLOSURE CONSTRUCTION

Filed March 29, 1961 4 Sheets-Sheet 3

Fig. 8

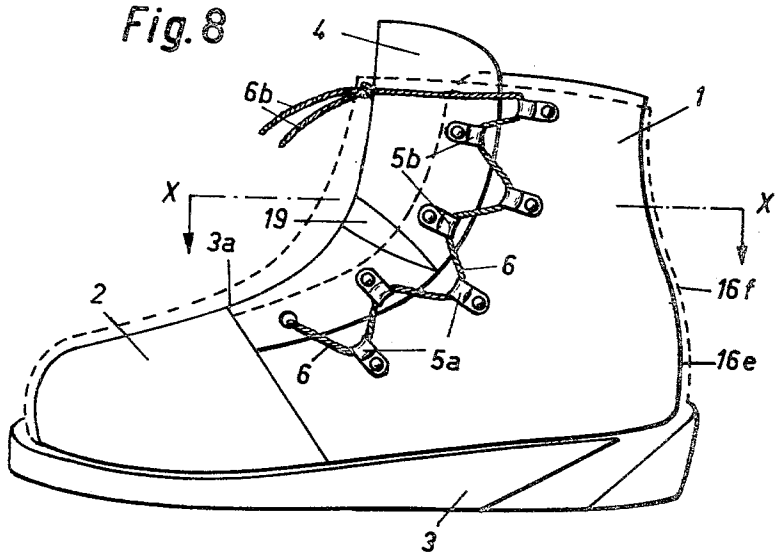

Fig. 9

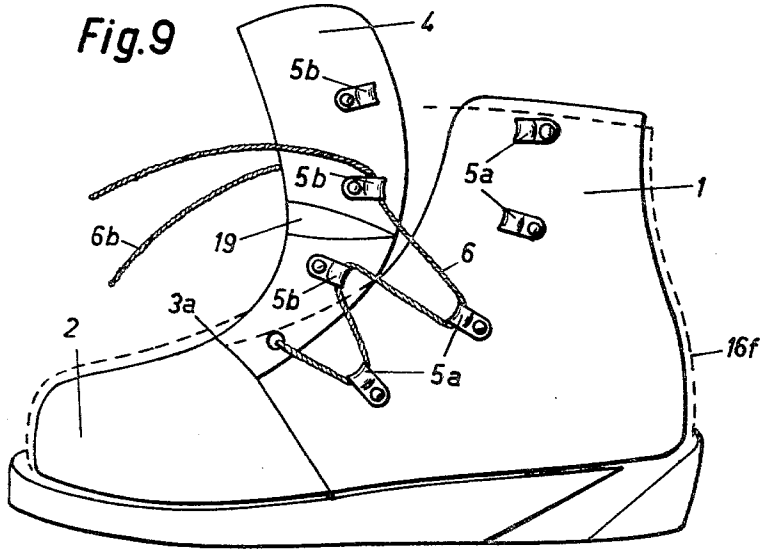

INVENTOR.
FRANZ FESL
BY Werner W. Kleeman
ATTORNEY

SPORTS BOOT CLOSURE CONSTRUCTION

Filed March 29, 1961 4 Sheets-Sheet 4

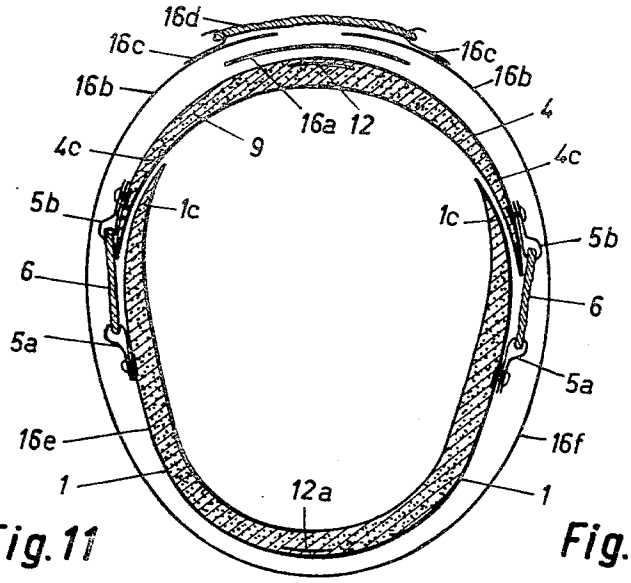

Fig. 10

Fig. 11

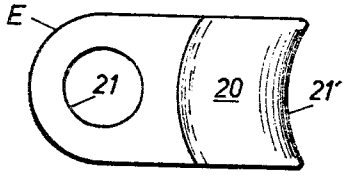

Fig. 12

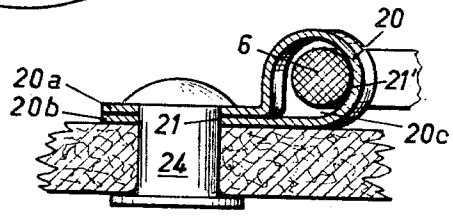

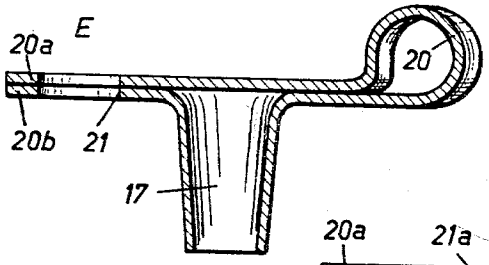

Fig. 13

Fig. 14

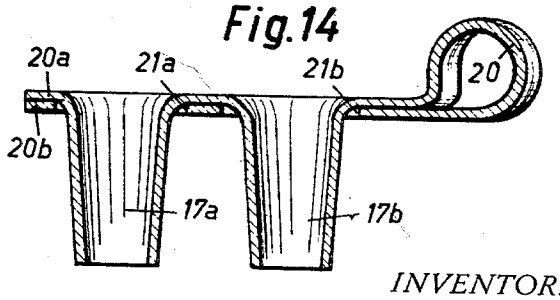

INVENTOR.
FRANZ FESL
BY Werner W. Kleeman
ATTORNEY

United States Patent Office

3,169,325

Patented Feb. 16, 1965

1

3,169,325
SPORTS BOOT CLOSURE CONSTRUCTION

Franz Fesl, Dachauerstrasse 11,
Furstenfeldbruck, Germany

Filed Mar. 29, 1961, Ser. No. 99,276
Claims priority, application Germany, Apr. 5, 1960, F 30,924; Austria, Oct. 24, 1960, A 7,963/60
6 Claims. (Cl. 36—2.5)

The present invention generally relates to a boot or shoe and, more particularly, to a sports boot adapted for use as a ski boot or the like of the type which may be provided with a single or double top or upper.

It is an important requirement of boots or the like, particularly ski boots that the foot of a user be very firmly supported in the boot without experiencing local pressure areas. Of particular importance is that the foot must be protected against lateral bending.

Accordingly it is an important object of the present invention to provide a boot or shoe which affords to the user an absolutely secure fit while simultaneously ensuring that the user does not experience discomfort or fatigue, even if worn in laced condition for long periods of time.

It is a further object of the present invention to provide a boot or shoe of the type described wherein the foot is protected against sway or lateral bending without restraint of freedom of movement in the direction of the longitudinal axis of the angle of a user.

Another important object of the present invention is to provide a shoe or boot which is relatively simple in construction, relatively easy and economical to manufacture, yet highly reliable in its function of properly supporting the foot of a user.

Still a further important object of the present invention is to provide means for securely supporting and protecting the foot of a user against undesired movements in a particular direction, while still providing great comfort for the user.

The boot or shoe designed according to the teachings of the present invention is provided with at least one upper having two side portions and characterized by a closing member preferably operating in the manner of a saddle-like tongue and adapted to the shape of the foot in the region of the instep. The closure member is connected with the two sides of the upper or top outside the center thereof, with the connection with at least one side being capable of detachment. The closing member is preferably padded and may be provided with a metal reinforcement to prevent lateral bending. The side portions and the closing member may form the upper of boots provided with two uppers. Connection of the closing member with the side portions of the upper is preferably effected by lacing or the like arranged laterally on the boot so that no pressure areas are created on the instep. Additionally, the heel line or backstay may also be provided with a reinforcing band. The ski or sports boots according to the present invention display substantial advantages over the heretofore known boots of the type described. The attachment means for securing the closing member to the upper and located on either side of the center of said closing member prevents exertion of undesirable pressures on the foot by such closing members and lacing or fastening means.

Still further objects and the entire scope of applicability of the present invention will become apparent from the detailed description given hereinafter; it should be understood, however, that the detailed description and specific examples, while indicating preferred embodiments of the invention, are given by way of illustration only, since various changes and modifications within the spirit and

2

scope of the invention will become apparent to those skilled in the art from this detailed description.

In the drawings:

FIG. 1 is a side view of a boot or shoe provided with a single upper and designed according to the present invention;

FIG. 2 is a cross-sectional view of the boot shown in FIG. 1 and taken along the line II—II thereof;

FIG. 3 is a plan view of a reinforcing band for a saddle-like tongue or closing member;

FIG. 4 is a plan view of a closing member incorporating the reinforcing band;

FIG. 5 is a cross-sectional view through the upper of a boot provided with a modified form of tongue or closure member according to the present invention;

FIG. 6 is a cross-sectional view through the upper of a further form of boot construction according to the present invention;

FIG. 7 is a cross-sectional view through the upper of still another form of boot construction;

FIG. 8 illustrates a boot with two uppers and provided with a saddle-like tongue or closing member shown in attached condition;

FIG. 9 illustrates the boot of FIGURE 8 with the saddle-like tongue or closure member in detached or open condition;

FIG. 10 is a cross-sectional view of the boot shown in FIGS. 8 and 9 taken along the line X—X of FIG. 8;

FIGS. 11 and 12 are respective plan and side views of an eyelet member;

FIG. 13 shows in detail an eyelet provided with an expanding sleeve; and

FIG. 14 shows an eyelet provided with two expanding sleeves.

Referring now to the drawings and, more particularly to FIGURE 1, there is shown a boot B provided with an upper U attached to a sole member 3 in a conventional manner known to the art. The upper U comprises two side portions 1 which may be formed of two leather layers 1*a* and 1*b*, with the space between said layers being filled with a foam-rubber layer 9 or the like serving as padding, as clearly shown in FIG. 2. The front of the upper is closed by a saddle-like closing member or tongue 4 which may be formed, by way of example, by two leather portions 4*a* and 4*b* between which a layer of foam material 9*a* is inserted as a padding. In the embodiment according to FIGS. 1 and 2, the lateral free ends 4*c* of the saddle-like closing member or tongue 4 are located underneath or inside the front edges 1*c* of the side portions 1, as best seen in FIG. 2. The saddle-like tongue member 4 extends from the vamp 1*h* in the region of the lower end of the instep at least as far as the top edge 1*f* of the side portions 1. Extending from the front edges 1*c* of the side portions 1 are lateral flaps 1*d* which overlap the aforesaid saddle-like tongue member 4 when the boot is in laced condition. The flap nearest the viewer of FIG. 1 has not been shown in order to render visible the inside lacing.

The boot B is provided with two lateral lacing systems 5 which are designed to detachably connect the saddle-like closing member or tongue 4 with the side portions 1. Arranged on the inside of the front edges 1*c* or on the inside of the lateral tongues 1*d* is a first group of suitable fastening supports such as the closed eyelets 5*a*. A second group of closed eyelets 5*b* is provided on each outer end of the tongue member 4. A single shoelace 6 zig-zags first through the eyelets 5*a* and 5*b* on the one side of the boot B, crosses the lower end 6*d* of the saddle-like tongue member 4 after being passed through the apertures 6*c*, and then zig-zags through the respective eyelets 5*a* and 5*b* located on the other side of the boot B. The free ends

6*b* of the shoelace 6 can then be pulled taut and knotted. Since the saddle-like tongue member 4 rests firmly against the instep, the foot of the user is firmly held in the boot B without being subjected to local pressure areas.

An exterior lacing system is provided to hold the two laterally arranged cover flaps 1*d* in position. Accordingly, two rows of hooks 7 are provided for the exterior lacing system in the region where the front edges 1*c* of the side portions 1 merge with the lateral cover flaps 1*d*. The individual hooks and eyelets may be attached to the boot leather by means of rivets or otherwise. In the embodiment shown in FIGURES 1 and 2, a common rivet 7*c* (see FIG. 2) is provided for such hook 7 of the exterior lacing system and its opposite arranged eylet 5*a* of this eyelet group.

The saddle-like tongue or closure member 4 may be formed, as previously stated, of a single piece of material such as leather. If two individual parts 4*a'* and 4*a''* are employed to form the saddle-like tongue member 4, as shown in the embodiment of FIGS. 1 and 2, the desired curvature may also be obtained by dividing the portions 4*a* and 4*b* forming the saddle-like tongue 4 at the point where the foot bends in the region of the instep, as generally indicated by line 18 of FIG. 1. The two separate parts 4*a'* and 4*a''* of the aforesaid tongue 4 may then be connected together with convex edges directed toward the outside to form a saddle-like tongue member 4 having the desired curvature.

In the embodiment according to FIGS. 1 and 2, a pocket 13 is provided in the area of the longitudinal central plane between the outer leather portion 4*a* and the padding rubber 9*a*. A spring stabilizing band 12 is inserted in this pocket 13 in order to increase transverse stability. The spring band 12 may be formed of conventional spring steel and possesses a thickness of about 0.5 mm. and a width of 18–20 mm. In FIGURE 3 there is shown in detail a spring band 12 provided at its free ends 12*b* with bores 14 through which rivets or the like may be passed in order to hold the band 12 in desired position in the pocket 13.

In FIG. 4 there is illustrated a plan view showing in detail the saddle-like closing member or saddle-like tongue 4. The tongue 4 has its lower end 3*a* attached to the boot by sewing or otherwise in a manner known to the art. Broken lines indicate the pocket 13 and the substantially flat, thin steel band 12 arranged in the region of the central plane of said tongue, with the stabilizing band 12 attached to the aforesaid tongue member 4 by means of rivets 15. Located on both sides of the pocket 13 is a group of three fastening eyelets 5*b*. Arranged above the lowermost edge 3*a* of tongue 4 are four holes adapted for insertion of the lace 6, in a manner previously shown in FIG. 1. In a manner similar to that employed to reinforce the tongue or closure member 4, the heel line or backstay 16*b* may be provided with a spring stabilizing band indicated by reference numeral 12*a* in FIG. 2. The spring band 12*a* may be of the same design as the spring band 12, but preferably should only be about 14–16 mm. wide. The two stabilizing spring bands 12 and 12*a* ensure that lateral bending of the ankle is practically impossible, particularly so because the spring band 12 is firmly in registry with the foot of the user so as to support it. The boot B shown in FIGS. 1 through 4 is most comfortable while simultaneously ensuring that undesired pressure areas do not occur since lacing of said boot is not carried out along the instep line. Moreover, the spring bands 12 and 12*a* provide excellent support such that lateral bending, in particular, is practically impossible. It will be recognized that in the embodiment of FIGURES 1–4 the tongue member 4 is provided at its lateral edges with the fastening eyelets 5*b* adapted to be engaged by the lacing 6 so that such closing member 4 partakes the function of a conventional horse saddle, which, as is known, is applied to a horse by means of the girth, the latter of which is then comparable to the fastening means. Hence, such saddle-like tongue or closing member performs the function of holding and reinforcing the foot within the boot as well as distributing the force from the shoe laces over a large surface area, much in the manner of the aforesaid saddle. In contradistinction thereto, it will be appreciated that the standard shoe tongue member known to the art does not have fastening means applied thereto, and primarily fulfills the functions of visibly sealing the opening between the sides of the shoe as well as to mitigate the pressure of the crossed shoe laces, such functions of the standard tongue member therefore being different from the aforedescribed saddle-like tongue member of FIGURES 1–4.

In FIG. 5, there is shown a cross-sectional view of an upper U of a further embodiment of a boot designed according to the present invention. Similar parts are designated by the same reference numerals employed in FIGS. 1 through 3. In the boot according to FIG. 5 the closing member or tongue 4' is located underneath the forward edges 1*c* of the side portions 1. The cover flap 1*d* is connected with one front edge 1*c* and extends therefrom so as to cover the entire instep area. The cover flap 1*d* is provided at its free edge 1*g*, located at the right in the drawing, with the eyelets 5*b'* while the eyelets 5*a* are arranged at the outside of the side portions 1. The pocket 13 accommodating the stabilizing spring band 12 is located underneath the cover flap 1*d* and at the backstay of the boot there is provided a further pocket 13*a* accommodating a further spring band 12*a*. In the boot according to FIG. 5, the cover flap 1*d* will force the tongue portion 4' against the instep line when the boot is laced so that the foot wil again be firmly supported without being restrained from desired movements by the lacing. In this case, the tongue 4' is not constructed for attachment with the upper, as aforedescribed, and therefore does not function as a saddle-like tongue member, rather as a standard shoe tongue.

FIG. 6 is a cross-sectional view of a further embodiment of a boot designed according to the present invention, similar parts again being designated by like reference numerals. In the embodiment according to FIG. 6, the saddle-like closing member or tongue 4 is located on top of the front edges 1*c* of the side portions 1. The respective row of eyelets 5*a* are arranged on the outside of the side portions 1, whereas the respective row of eyelets 5*b* are located in the vicinity of the outer edges 4*c* of the aforesaid saddle-like tongue member 4. The shoelace 6 may be arranged in the same manner as shown in FIG. 1. The boot according to FIG. 6 is provided in a manner similar to that described in conjunction with the previous embodiments, with reinforcing or stabilizing bands 12 and 12*a*, the band 12 being accommodated in a pocket 13 provided in the tongue member 4. The embodiment according to FIG. 6 differs from that of the previous figures mainly in that no outside flaps or tongues and no further lacing are provided.

The boot shown in cross-section in FIG. 7 is again provided with a standard closing member or tongue 4' formed by the two layers 4*a* and 4*b*, with a padding layer 9*a* being inserted between said two layers. The side portions 1 have their front edges 1*c* provided with flaps or tongues 1*d* which do not overlap. Provided externally of the flaps 1*d* is an exterior flap or tongue 1*e* in which the reinforcing or stabilizing band 12 is arranged. To this end, a pocket 13 is disposed on the inside of the exterior tongue 1*e* in which the reinforcing band 12 is located. This tongue member 1*e* may be considered to be a further closure member for the boot. Provided at the lateral outer edges 1*m* of the exterior tongue or closure 1*e* and which also partakes the function of a saddle-like closure are the rows of eyelets or fasteners 5*a*, the associated rows of eyelets 5*b* being attached to the inner flaps or tongues 1*d*. The shoelace 6 is threaded through the eyelets 5*a* and 5*b* in the same manner described and shown in FIG. 1. Again, the heel line or backstay of the

boot, according to FIG. 7, is provided with a pocket 13*a* which accommodates the reinforcing or stabilizing band 12*a*. In the boot according to FIG. 7, the tongue member 4', as such, is not connected to the side portions 1 of the upper by lacing. The closing member 4 is pulled against the foot by the exterior saddle-like tongue or closure member 1*e* so that the same effects are obtained as with the embodiment according to FIG. 1. Only one lacing system is provided which, however, is sufficient to afford to the foot of the user the necessary support. As the boot is laced laterally of the instep line, pressure areas are substantially avoided, particularly in the region of the instep.

All boots heretofore disclosed were only provided with a single saddle-like upper. The arrangement of a front closing member or tongue 4 or 1*e* with a non-central lacing system may, however, also be applied to boots having two concentric uppers. FIGS. 8 through 10 illustrate such an arrangement. The boot according to these last mentioned figures is again provided with a sole member 3 to which the two uppers are attached. In FIGS. 8 and 9 the inner upper 16*e* is represented in full lines and the outer upper 16*f* in broken lines. The inner upper 16*e* is formed by the two side portions 1 and the toe box 2. Attached to the vamp edge 3*a* of the toe box 2 adjacent the instep is the saddle-like closing member or tongue 4. In order to give the saddle-like tongue 4 the required curvature, a gusset may be inserted as shown at 19. The tongue 4 may be bent far forward, as clearly shown in FIG. 9. For connection of the saddle-like closing member 4 with the side portions 1, respective rows of eyelets 5*a* and 5*b* are provided, the eyelets 5*a* being located adjacent the ends 1*c* of the side portions 1 and the eyelets 5*b* adjacent the ends 4*c* of the saddle-like closing member or tongue 4. The shoelace 6 is threaded through the respective eyelets 5*a*, 5*b* in a manner similar to that described in conjunction with FIG. 1. As shown, the shoe lace or band 6 passes across the lower end of the instep and is passed through the eyelets 5*a* and 5*b* on both sides of the boot. The lace ends 6*b* may be knotted across the upper end of the aforesaid closing member 4. As clearly shown in FIG. 10, the saddle-like tongue 4 covers the outer edges 1*c* of the side portions 1. Reinforcing or stabilizing bands 12 and 12*a* are again inserted in the region of the instep line and at the backstay or heel line, in a manner as already described with reference to the previous figures.

Located outside the inner upper 16*e* is the outer upper 16*f*. The outer upper 16*f* may be provided with a tongue 16*a* in the conventional manner which is located underneath the junction line of the side portions of the outer upper 16*f*. The edges 16*b* of the outer upper 16*f* are secured together by a row of hooks 16*c* and a lace 16*d* as can best be seen in FIG. 10. If two uppers are provided as in the embodiment previously described, the lacing 6 is preferably arranged so that it may be slackened or tightened while the outer upper is laced. In the embodiment according to FIGS. 8 through 10 it is naturally also possible to arrange the reinforcing springs or bands 12 and 12*a* in the outer upper 16*f*.

In the boots heretofore disclosed it is important that the shoelace 6 can be readily loosened. The respective eyelets must, therefore, be designed such that they present only minimum frictional resistance to the lace 6 which is threaded through them. In order to obtain this feature, the eyelets may be designed as shown in FIGS. 11 through 13. FIG. 11 shows an eyelet E in plan view, and FIG. 12 the same eyelet in cross-section and attached to the leather of the boot. The eyelet E is formed of a metal band 20 of which the ends 20*a* and 20*b* are bent together or doubled over and provided with a bore 21 for the insertion of a rivet 24 or the like. The central portion 20*c* forms the eyelet proper and it is curved for adjustment to the path of the shoelace 6 as indicated at 21' in FIGS. 11 and 12. The diameter of the eyelet opening 20*c* for the passage of the lace 6 is substantially larger than the diameter of the lace 6 so that the latter will be able to freely move therethrough. The radius of curvature of the saddle or curved surface 21' is preferably somewhat smaller than the actual curvature of the lace 6 in the laced boot so that the lace 6 will contact the saddle surface 21' only in the central zone of the eyelet.

FIG. 13 shows a further embodiment of an eyelet E which differs from the embodiments according to FIGS. 11 and 12 in that it is provided, adjacent the bore 21 adapted to accommodate the rivet 24 with an expanding sleeve 17, preferably produced by deep drawing which will be flexed outwardly or expanded after insertion in the leather of the boot.

In FIG. 14 there are shown two expanding sleeves 17*a* and 17*b* which may be provided on the upper leg 20*a* of the metal band 20, said sleeves passing through suitable openings 21*a* and 21*b* in the leg 20*b*. The two expanding sleeves are passed through the leather of the boot and expanded outwardly by a tool or the like so that the eyelet is securely attached to the boot. With the embodiment of FIG. 14 additional rivets may be dispensed with. The disclosed eyelets are particularly suited for use as eyelets 5*a* and 5*b*.

As will be readily apparent to those skilled in the art certain modifications and variations of the invention can be practiced. For example, rather than secure the cover member 4 at its lower end to the upper, the same may be employed as a completely detachable insert which is retained in its desired position by the fastening system. It is equally possible to rigidly attach one side edge directly to the upper, as by stitching or the like. Moreover, the reinforcing band or stabilizing spring 12 need not of necessity be formed of metal, but may be formed from other suitable materials such as plastic, wood or whalebone.

Having thus described the present invention what is desired to be secured by United States Letters Patent, is:

1. In a boot particularly suitable for use as a ski boot, at least one upper including a pair of side portions, a separate saddle-like closing member having a central portion and lateral end portions, said saddle-like closing member being positioned in the region of said pair of side portions of said upper, stabilizing means cooperating with said saddle-like closing member, said stabilizing means incorporating at least one metallic band-shaped flexible member, said band-shaped member being predominantly flexible transverse to the longitudinal axis thereof in the lengthwise direction of the boot to prevent lateral bending of the foot of a user, and holding means including fastener means arranged adjacent at least one lateral edge portion of said saddle-like closing member and said side portion of said upper and lacing means threadably engaging said fastener means along said side portion of said upper to releasably secure said saddle-like closing member to said upper without crossing said central portion of said closing member.

2. In a boot particularly suitable for use as a ski boot according to claim 1, said fastener means being arranged adjacent both lateral edge portions of said saddle-like closing member and said side portions of said upper.

3. In a boot particularly suitable for use as a ski boot according to claim 1, wherein said fastener means are groups of spaced eyelets.

4. In a boot particularly suitable for use as a ski boot according to claim 3, wherein said eyelets are expandable.

5. In a boot particularly suitable for use as a ski boot according to claim 1, wherein said saddle-like closing member is provided with a longitudinally extending pocket, said stabilizing means being inserted in said pocket.

6. In a boot particularly suitable for use as a ski boot

according to claim 1, wherein a pair of concentrically arranged inner and outer uppers are provided.

References Cited by the Examiner

UNITED STATES PATENTS

1,781,950	11/30	Hilgert	36—54
1,798,470	3/31	Janke	36—50
2,526,831	10/50	Schaeffler	36—112
2,531,763	11/50	Andre	36—112
3,008,250	11/61	Herunter	36—112

FOREIGN PATENTS

180,011	10/54	Austria.
192,296	10/57	Austria.
1,010,062	3/52	France.
1,083,787	6/54	France.
605,287	11/34	Germany.
812,050	8/51	Germany.
935,777	11/55	Germany.
298,856	8/54	Switzerland.
321,074	6/57	Switzerland.

JORDAN FRANKLIN, *Primary Examiner.*

EDWARD V. BENHAM, DAVID J. WILLIAMOWSKY, *Examiners.*