Nov. 6, 1951 F. W. OFELDT 2,573,982

NOZZLE

Filed Dec. 14, 1946

Fig. 1

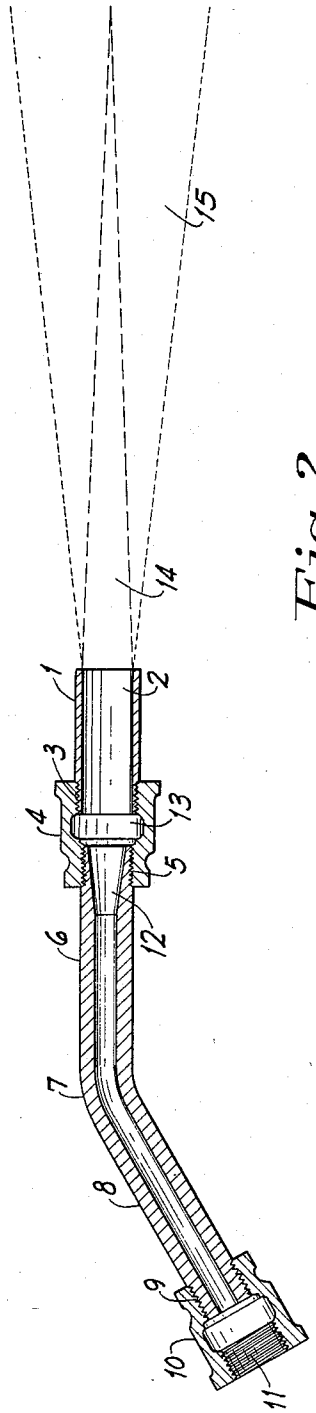

Fig. 2

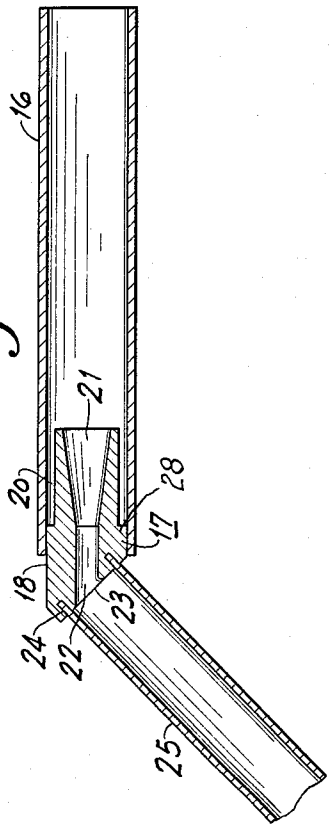

INVENTOR.
FRANK W. OFELDT
BY
William D. Carothers
his Atty.

Patented Nov. 6, 1951 2,573,982

UNITED STATES PATENT OFFICE

2,573,982

NOZZLE

Frank W. Ofeldt, Carnot, Pa., assignor to Homestead Valve Manufacturing Company, Coraopolis, Pa., a corporation of Pennsylvania

Application December 14, 1946, Serial No. 716,238

3 Claims. (Cl. 299—107)

1

This invention relates generally to method and apparatus for controlling the discharge of a spray mixture composed of liquid and vapor of a liquid under pressure and more particularly to a nozzle of a spray gun through which this spray mixture is discharged.

The generation of a spray mixture of liquid and vapor of a liquid may be produced as disclosed in U. S. Letters Patent No. 2,289,674 and the patents referred to therein. Such a spray mixture may be made by supplying a metered amount of a spray solution to a heating zone and converting a portion thereof into vapor or steam under pressure to form the spray mixture by the application of a predetermined amount of heat which is correlated with the amount of the spray solution supplied.

When a spray mixture of this character is discharged to atmosphere, the latent heat contained therein atomizes the liquid producing a finely divided spray or mist which is effective for cleaning or for agricultural spraying when the proper chemicals are mixed with the original solution. When employing the spray mixture for cleaning purposes it is necessary to hold the end of the nozzle very close to the surface to be cleaned in order to utilize the force of the atomized liquid as an effective cleaning agent. Frequently the reflected mist from the surface being cleaned obliterates the cleaning action from the view of the operator unless the nozzle is held in such a way as to permit the forceful spray to impinge the surface being cleaned at a sharp angle causing most of the fine droplets of water to strike the surface being cleaned and glance in substantially the same direction. However the best cleaning action is of course obtained when the axis of the mouth of the nozzle is held substantially normal to the surface being cleaned, and then when the nozzle is very close thereto as the flashing action of the vapor under pressure in atomizing the liquid is most effective as a cleaning agent when the mouth of the nozzle is but a few inches from the surface being cleaned.

The principal object of this invention is the provision of a nozzle which provides a pre-flashing action prior to the discharge of the spray mixture causing the spray to have a conically diminishing core of relatively large and concentrated liquid slugs effective for cleaning a surface spaced several feet from the mouth of the nozzle.

Another object is the provision of a nozzle that is simplified in structure and economical to produce.

2

Another object is the provision of a nozzle for use in discharging a spray mixture of liquid and vapor of a liquid under pressure which provides an expansion chamber that is effective in converting a spray mixture into a stream having a core of condensed liquid slugs effective in cleaning a surface at a considerable distance from the mouth of the nozzle.

Another object is the provision of a nozzle having an expansion chamber and a bore of proportioned dimensions for producing a predetermined character of spray.

Other objects and advantages appear hereinafter in the following description and claims.

A practical embodiment illustrating the principles of this invention is shown in the accompanying drawing wherein:

Fig. 1 is a sectional view of a nozzle comprising this invention.

Fig. 2 is a sectional view of a modified nozzle structure comprising this invention.

The nozzle of Fig. 1 comprises a hollow mouth nipple 1 which is provided with a bore 2, preferably of uniform diameter throughout its length. The inner end of the nozzle mouth nipple 1 may be threaded or otherwise secured within the bore 3 of the reducing sleeve 4. The smaller bore 5 of the reducing sleeve 4 is arranged to threadably receive the pipe nipple 6. The pipe nipple 6 is bent at 7 to provide an angular disposition of the nozzle relative to the spray gun which is axially aligned with the portion 8 of the nipple 6. The end of the portion 8 of the nipple 6 is threaded at 9 so as to receive the small end of the second reducing sleeve 10. The other threaded bore 11 of the reducing sleeve 10 is arranged to be secured to the threaded end of the spray gun tube which is not shown.

The two reducing sleeves 4 and 10, used in making up the spray gun nozzle as shown, are the same, being referred to commercially as a malleable quarter by three-eighths inch reducing sleeve. When the reducing sleeves of this size are employed, the nozzle mouth nipple 1 should be a standard three-eighths inch pipe nipple approximately one and one-half inches long. The bore 2 of this nipple is approximately one-half of an inch in diameter. The nipple 6 is preferably constructed from what is known as an extra heavy quarter inch pipe, the outer diameter of which is usually considerably greater than a quarter inch, the inner diameter being approximately five-sixteenths of an inch. The outlet end of the nipple 6 is provided with an

outwarding flaring mouth 12 which extends approximately five-eighths of an inch into the bore of the nipple 6 and has an included angle of approximately fourteen and one-half degrees.

When the threaded ends of the nipple 1 and the nipple 6 are screwed into the reducing sleeve 4 the latter provides between their ends an expansion chamber 13, which is approximately three-fourths of an inch in diameter and is larger than the bore 2 of the nipple 1 and is approximately a half inch long.

If a chamber, such as an expansion chamber 13, is not provided between a nipple 6 and the nipple 1, the spray mixture of a liquid and vapor of a liquid under pressure when discharged from the nozzle to atmosphere employ the latent heat to fully atomize all of the liquid in producing a spray. However, the chamber 13 of the sleeve 4 provides space for the expansion of the vapor of the spray mixture. This expansion space permits the vapor to react upon the liquid and convert it into a concentrated mass of liquid slugs which substantially fills the mouth opening of the nipple 1 and gradually diminishes to a point to produce the cone-shaped core 14 that extends several feet from the mouth of the nozzle. The heated slugs of water become atomized as the spray steam progresses to provide an outer annular zone 15 of the atomized water droplets or particles, which zone becomes increasingly larger as the core 14 becomes smaller.

The outwardly flaring nozzle mouth 12 functions to increase the velocity of the spray mixture, thereby obtaining the full value of the vapor under pressure in the spray mixture.

Similar nozzles that are proportioned from approximately the same dimensions as that disclosed provide a similar spraying action in discharging a spray mixture of liquid and vapor of a liquid under pressure. Relocation of the expansion chamber 13 relative to the outwardly flaring mouth 12 requires a change of the length of the nipple 1 to produce the same desired results. When the expansion chamber 13 is placed at or beyond the end of the outwardly flaring mouth 12 of the nipple 6 as shown in Fig. 1, it is in a position to immediately receive the expanding vapor and quickly reacts upon the liquid within the short nipple 1 to produce the concentrated liquid slugs in the spray stream. This permits the use of a short nipple 1 which in this instance is approximately one and one-half inches long. However when the expansion chamber 13 is placed partially or wholly in back of, or surrounding the outwardly flaring mouth 12 it is necessary to increase the length of the nipple 1 to obtain the same spray stream effect because the vapor under pressure requires a longer nipple 1 to react on the spray mixture and produce a spray stream with concentrated liquid slugs. Such a structure is shown in Fig. 2 wherein the outer nozzle 16 is a pipe nipple having the inner nozzle 17 inserted in one end. The nozzle 17 is smaller than the bore of the nozzle 16 and is telescoped therein. The nozzle 17 is provided with the annular flange 18 arranged to fit and close the bore of the nozzle 16 at its rear end. This shoulder also provides the annular chamber 20 with the bore of the nozzle 16 and the outer wall of the inner nozzle 17, which chamber opens into the bore of the nozzle 16 in the same plane as the outwardly flaring mouth 21 of the nozzle 17. The mouth 21 is connected to the small bore 22. The back of the nozzle 17 is faced at 23 in a plane disposed at an angle relative to the axis of the nozzles. A recess 24 surrounding the bore 22 is formed in the face 23 to receive the end of the tube 25 which forms a part of the spray gun that delivers the spray mixture from the generator to the nozzle structure.

As shown in Fig. 2 the nipple or nozzle 16 is materially longer than the nipple 1 of Fig. 1 which is necessary to make the nozzle properly function when the expansion chamber 20 is behind the inner nozzle mouth 21 when the other dimensions are substantially the same. If the flange 28 is permitted to extend to the mouth 21 of the nozzle 17 and eliminate the chamber 20, this nozzle will function to flash all of the spray mixture into a finely divided atomized mist.

If water were supplied to the chamber 20 this nozzle would be the same as that disclosed in my co-pending application Serial No. 716,239, filed December 14, 1946, now Patent No. 2,552,644 granted May 15, 1951.

These nozzles provide a fifty percent greater cleaning effect than any other nozzle known or used heretofore with a spray mixture of liquid and vapor of a liquid.

I claim:

1. A spray nozzle structure comprising, a tubular member having an unobstructed bore of constant cross-sectional shape and area for discharging a spray, a second tubular member the bore of which has an outwardly flaring mouth smaller than the bore of the first tubular member and connected to discharge thereinto a fluid spray mixture under pressure of liquid and vapor of a liquid, and a closed reaction chamber open only to the bores of said tubular members at their juncture to provide a reaction zone for the vapor of the fluid spray mixture upon passing from the second tubular member to the first tubular member.

2. A spray nozzle structure comprising, a sleeve, a nipple, having an unobstructed bore of constant cross-sectional shape and area for discharging a spray and having one end mounted in one end of said sleeve, a second nipple the bore of which has an outwardly flaring mouth smaller than the bore of the first nipple and mounted in the other end of said sleeve to discharge a fluid spray mixture under pressure of liquid and vapor of a liquid from the outwardly flaring mouth through the sleeve and into the bore of the first nipple, the chamber in the sleeve between the ends of the nipples providing a reaction zone for the vapor of the fluid spray mixture upon passing from the outwardly flaring mouth of the second nipple to the first nipple.

3. In a spray nozzle structure the combination of, a large nozzle having an unobstructed bore of constant cross-sectional shape and area for the discharge of a spray stream, a smaller nozzle inserted into one end of the larger nozzle and having a bore to receive and direct a spray mixture of liquid and vapor of a liquid under pressure to the larger nozzle, an outwardly flaring mouth at the discharge end of the smaller nozzle, an outwardly extending shoulder on the smaller nozzle to engage and close said one end of the larger nozzle and defining a closed reaction chamber between the bore of the large nozzle and the perimetral surface of the smaller nozzle, said chamber opens only to the bores of said nozzles at their juncture to provide a re-

action zone for the vapor of the fluid spray mixture upon passing from the smaller nozzle to the larger nozzle.

FRANK W. OFELDT.

REFERENCES CITED

The following references are of record in the file of this patent:

UNITED STATES PATENTS

Number	Name	Date
889,701	Luckenbach	June 2, 1908
945,899	Achee	Jan. 11, 1910
955,715	Stokes et al.	Apr. 19, 1910
1,153,132	Pettitt	Sept. 7, 1915
1,653,954	Friedmann et al.	Dec. 27, 1927
1,792,929	Remey	Feb. 17, 1931
1,800,413	Smith	Apr. 14, 1931
1,812,794	Lally	June 30, 1931
1,827,583	James	Oct. 13, 1931
1,874,002	Fantz	Aug. 30, 1932
1,883,656	Estock	Oct. 18, 1932
2,019,694	Reitlinger	Nov. 5, 1935
2,117,684	Schaaf	Oct. 14, 1935
2,238,686	Ensminger	Apr. 15, 1941
2,351,430	Huthsing	June 13, 1944
2,391,422	Jackson	Dec. 25, 1945

FOREIGN PATENTS

Number	Country	Date
198,406	Great Britain	June 7, 1923