March 30, 1926. 1,578,716

K. E. CUNNINGHAM

CORSET

Filed July 23, 1925

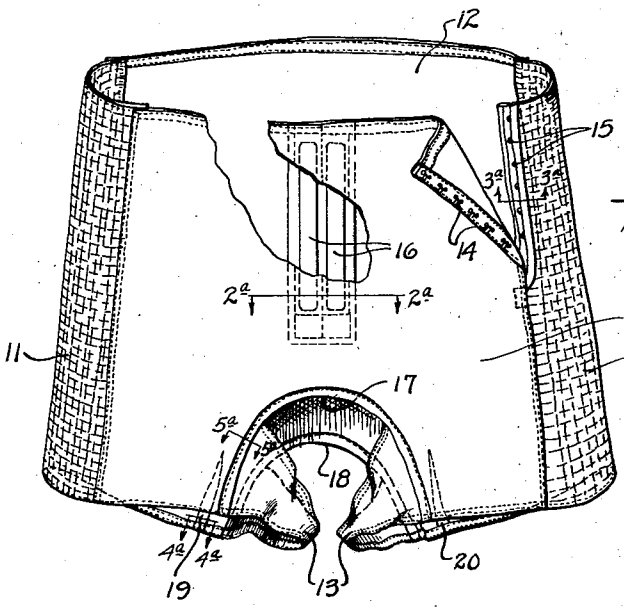

Fig 1

Fig 2

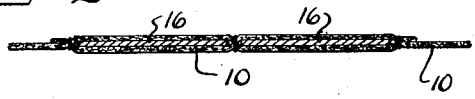

Fig 3

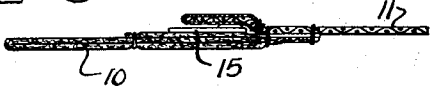

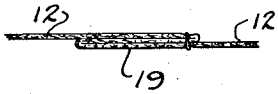

Fig 4



Fig 5

INVENTOR
Katherine E. Cunningham
BY
J. O. Webster,
ATTORNEY

Patented Mar. 30, 1926. 1,578,716

UNITED STATES PATENT OFFICE.

KATHERINE E. CUNNINGHAM, OF CHICAGO, ILLINOIS, ASSIGNOR TO THE H. W. GOSSARD CO., OF CHICAGO, ILLINOIS, A CORPORATION OF ILLINOIS.

CORSET.

Application filed July 23, 1925. Serial No. 45,534.

To all whom it may concern:

Be it known that I, KATHERINE E. CUNNINGHAM, a citizen of the United States, and resident of Chicago, in the county of Cook and State of Illinois, have invented certain new and useful Improvements in Corsets, of which the following is a specification.

This invention relates to corsets and has for its object to provide a light weight garment fitting snugly above and below the hips and staying in place on the figure without the aid of hose supporters, yet comfortable and not impeding body movement. The invention is especially suitable for persons wearing rolled hose where it is impossible to hold down the corset by garters attached between the corset and the hose.

Corsets have generally depended upon hose supporters pulling downward to flatten out body curves and hold the garment in place. With the present practice of wearing rolled hose the old hose supporters would be impracticable and band garters cannot of course hold the corset in place.

According to this invention, a comfortable, light weight corset resembling a girdle is provided to give the desired fit, shaping of the figure, and maintenance of position without the use of hose supporters. This is accomplished by having cut away body portions including longitudinally inserted elasticity above and below the hips, in combination with bands passing between the legs adjacent the crotch for laterally pulling in the lower outer portions of the corset.

Referring to the drawings,

Fig. 1 is a perspective view of the corset,

Fig. 2 is a section on the line 2^a—2^a of Fig. 1.

Fig. 3 is a section on the line 3^a—3^a of Fig. 1.

Fig 4 is a section on the line 4^a—4^a of Fig. 1.

Fig. 5 is a section on the line 5^a—5^a of Fig. 1.

The corset or girdle of this invention comprises front and rear longitudinally extending inelastic portions 10 and 12 respectively, between which are placed side elastic sections 11 of woven fabric. As illustrated, the side elastic sections 11 extend from the top to the bottom of the corset in order to provide sufficient inserted elasticity to afford the proper adjustment and fit substantially from top to bottom of the corset. Stiffening means comprising a pair of short light stays 16 may be embodied in the upper central portion of the front non-elastic portion 10 to increase the flattening effect across the front. The lower central portions of the front and rear sections are cut away from the bottom to slightly above the crotch at 17 and 18 respectively, for convenience and comfort. The lower rear portion 12 is provided with darts 19 and 20 to narrow its width and give a closer rear fit and flattening effect. To prevent unduly stretching the upper portion in drawing it on, the hooks and eyes 14 and 15 respectively or other fastening means are used. If desired, the fastenings 14 and 15 can extend from top to bottom at any desired place.

13 are leg bands secured between the front and rear cut away portions 17 and 18 on each side. As shown in Fig. 1, the leg bands 13 are tapered so as to be narrowest at their middle portions with their lower edges forming substantial continuations of the bottom edges of the portions 10 and 11 and their upper edges inclined to fit the natural contour of the body. In addition to thus exerting a lateral inward pull, to effect close fit, of the lower outer portions and to fit the crotch contour, the ends of the bands attached to the edges of the cut away portions tend to flatten and hold the latter down.

By this invention, a self-fitting girdle type corset is provided which is light, comfortable and convenient. Also the disadvantages and discomforts of all-elastic reducing corsets or girdles are eliminated by using only enough inserted elasticity so placed as to provide the necessary stretch in putting on and taking off, and the desired fit to hold it in place. By co-operation of the leg bands attached at the cut away portions to the elastic and inelastic body, the desired flattening of the abdomen and buttocks is obtained, without diagonal pulling down and without tendency to up, down, or twisting movement.

I claim:

1. A girdle like corset shaped to closely fit the lower body below the waist and around the upper thighs below the crotch, comprising longitudinal inelastic portions extending substantially the full length of the corset and having elastic inserted substantially from top to bottom of the corset such as to effect the desired fit when

stretched, the front and rear portions of the corset extending respectively across the abdomen and across the buttocks, each portion being cut away at and below the crotch, and an inner leg-band on each side adjacent the crotch fixedly secured to the front and rear cut away portions to effect close fit below the hips by laterally pulling in the lower outer portions of the corset, said bands and said elastic co-operating to cause the garment to completely fit from top to bottom and to normally remain in position.

2. A girdle like corset shaped to closely fit the lower body below the waist to and around the upper thighs below the crotch comprising front and rear inelastic portions and longitudinal side elastic sections extending substantially the full length of the corset to effect the desired fit when stretched, the front and rear portions of the corset extending respectively across the abdomen and across the buttocks, each portion being cut away at and below the crotch, and an inner leg band on each side adjacent the crotch, connecting the front and rear cut away portions to effect close fit below the hips by laterally pulling in the lower outer portions of the corset, said bands and said elastic sections co-operating to cause the garment to completely fit from top to bottom and to normally remain in position.

3. A girdle like corset shaped to closely fit the lower body below the waist to and around the upper thighs below the crotch comprising front and rear inelastic portions and longitudinal side elastic sections extending substantially the full length of the corset to effect the desired fit when stretched, the front and rear portions of the corset extending respectively across the abdomen and across the buttocks, each portion being cut away at and below the crotch, and an inner leg band on each side adjacent the crotch connecting the front and rear cut away portions, said bands having relatively wide attaching ends and narrow intermediate portions fitting the body contour whereby in conjunction with said elastic sections to laterally pull in the lower outer portions of the corset and cause the garment to completely fit from top to bottom and to normally remain in position.

Signed at New York, in the county of New York and State of New York, this 22nd day of July A. D. 1925.

KATHERINE E. CUNNINGHAM.