(12) STANDARD PATENT (11) Application No. **AU 2007248991 B2**
(19) AUSTRALIAN PATENT OFFICE

(54) Title
Integrated processing of plant biomass

(51) International Patent Classification(s)
D21C 3/20 (2006.01) ***C13K 1/02*** (2006.01)

(21) Application No: **2007248991** (22) Date of Filing: **2007.05.08**

(87) WIPO No: **WO07/129921**

(30) Priority Data

(31) Number	(32) Date	(33) Country
60/746,682	**2006.05.08**	**US**
60/869,057	**2006.12.07**	**US**

(43) Publication Date: **2007.11.15**
(44) Accepted Journal Date: **2010.12.23**

(71) Applicant(s)
Biojoule Ltd.

(72) Inventor(s)
Yao, Jia-Long;Elton, Clare;Belanger, Helene;MacFarlane, Alan;Watson, James D.;Lough, Tony James;Chen, John;Prestidge, Ross;Farid, Mohammed Mehdi

(74) Agent / Attorney
Peter Maxwell & Associates, Level 6 60 Pitt Street, Sydney, NSW, 2000

(56) Related Art
US 5372939 A
US 5788812 A
US 2002/0069987 A1

(12) INTERNATIONAL APPLICATION PUBLISHED UNDER THE PATENT COOPERATION TREATY (PCT)

(19) World Intellectual Property Organization
International Bureau

(43) International Publication Date
15 November 2007 (15.11.2007)

PCT

(10) International Publication Number
WO 2007/129921 A1

(51) International Patent Classification:
D21C 3/20 (2006.01) *C13K 1/02* (2006.01)

(21) International Application Number:
PCT/NZ2007/000106

(22) International Filing Date: 8 May 2007 (08.05.2007)

(25) Filing Language: English

(26) Publication Language: English

(30) Priority Data:
60/746,682 8 May 2006 (08.05.2006) US
60/869,057 7 December 2006 (07.12.2006) US

(71) Applicant *(for all designated States except US)*: **BIOJOULE LTD.** [NZ/NZ]; One Fox Street, Parnell, Auckland (NZ).

(72) Inventors; and

(75) Inventors/Applicants *(for US only)*: **BELANGER, Helene** [CA/NZ]; 12 Giles Road, Palm Beach, Waiheke, Auckland (NZ). **WATSON, James D.** [NZ/NZ]; 769 Riddell Road, St. Heliers, Auckland (NZ). **YAO, Jia-Long** [NZ/NZ]; 35 McFadzean Drive, Blockhouse Bay, Auckland (NZ). **PRESTIDGE, Ross** [NZ/NZ]; 57 Tuarangi Road, Grey Lynn, Auckland (NZ). **LOUGH, Tony James** [NZ/NZ]; 33 Sturges Road, Henderson, Auckland (NZ).

(74) Agent: **BALDWINS**; PO Box 852, Wellington (NZ).

(81) Designated States *(unless otherwise indicated, for every kind of national protection available)*: AE, AG, AL, AM, AT, AU, AZ, BA, BB, BG, BH, BR, BW, BY, BZ, CA, CH, CN, CO, CR, CU, CZ, DE, DK, DM, DZ, EC, EE, EG, ES, FI, GB, GD, GE, GH, GM, GT, HN, HR, HU, ID, IL, IN, IS, JP, KE, KG, KM, KN, KP, KR, KZ, LA, LC, LK, LR, LS, LT, LU, LY, MA, MD, ME, MG, MK, MN, MW, MX, MY, MZ, NA, NG, NI, NO, NZ, OM, PG, PH, PL, PT, RO, RS, RU, SC, SD, SE, SG, SK, SL, SM, SV, SY, TJ, TM, TN, TR, TT, TZ, UA, UG, US, UZ, VC, VN, ZA, ZM, ZW.

(84) Designated States *(unless otherwise indicated, for every kind of regional protection available)*: ARIPO (BW, GH, GM, KE, LS, MW, MZ, NA, SD, SL, SZ, TZ, UG, ZM, ZW), Eurasian (AM, AZ, BY, KG, KZ, MD, RU, TJ, TM), European (AT, BE, BG, CH, CY, CZ, DE, DK, EE, ES, FI, FR, GB, GR, HU, IE, IS, IT, LT, LU, LV, MC, MT, NL, PL, PT, RO, SE, SI, SK, TR), OAPI (BF, BJ, CF, CG, CI, CM, GA, GN, GQ, GW, ML, MR, NE, SN, TD, TG).

Published:
— *with international search report*

[Continued on next page]

(54) **Title:** PROCESS FOR THE PRODUCTION OF BIOFUEL FROM PLANT MATERIALS

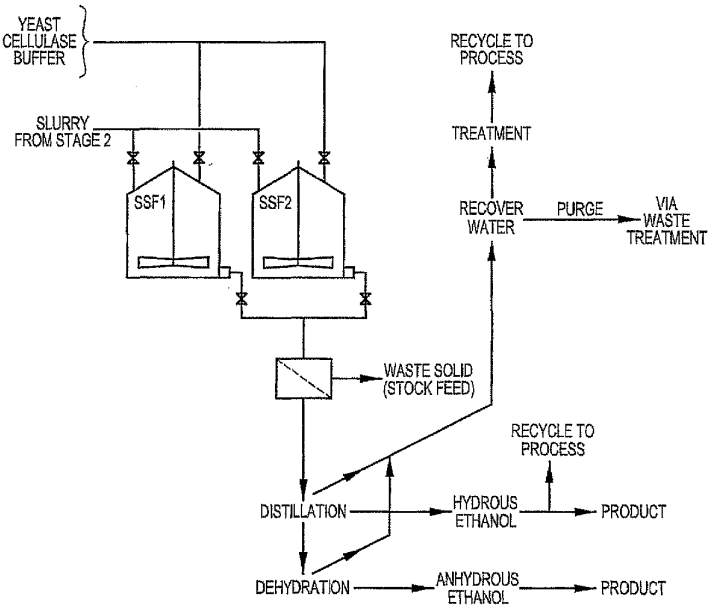

(57) **Abstract:** An integrated process for the production of ethanol from woody plant material is provided, the process comprising: contacting a continuous flow of the plant material with a counter-current continuous flow of an aqueous ethanol solution at elevated temperature and pressure to provide plant material depleted of lignin; removing ethanol from the lignin-depleted plant material; contacting a continuous flow of the lignin-depleted plant material with water at elevated temperature and pressure to solubilize xylose within the plant material; and hydrolyzing cellulose present in the plant material to form glucose, which in turn is fermented to produce ethanol.

WO 2007/129921 A1

— *before the expiration of the time limit for amending the claims and to be republished in the event of receipt of amendments*

For two-letter codes and other abbreviations, refer to the "Guidance Notes on Codes and Abbreviations" appearing at the beginning of each regular issue of the PCT Gazette.

2007248991 05 May 2010

INTEGRATED PROCESSING OF PLANT BIOMASS

REFERENCE TO RELATED APPLICATIONS

This application claims priority to US Provisional Patent Application no. 60/746,682 filed May 8, 2006 and US Provisional Patent Application no 60/869,057 filed December 7, 2006.

FIELD OF THE INVENTION

The present invention provides methods and apparatus for the production of biofuel from plant materials. More specifically, the present invention provides an integrated process for the production of plant biomass such as *Salix* spp. and its conversion to ethanol and other valuable products.

BACKGROUND

Woody biomass can be employed as a sustainable source of energy and is a valuable alternative to fossil fuels. More specifically, the biorefining of lignocellulosic material into fuel ethanol and lignin materials has the potential to displace a portion of petrol and oil based materials. It is likely that, with the depletion of global oil reserves and increasing awareness of the environmental and national security issues associated with dependence on fossil fuel, biomass will become a key resource for the production of transport fuel in much of the world.

The conversion of lignocellulosic biomass into fuel ethanol may offer the ideal solution given the rapid growth of short rotation crops such as shrub willow (*Salix* spp.). Two of the main components of wood, cellulose and hemicellulose, are polymers of simple sugars that can be converted into ethanol and/or other chemicals by fermentation. This ethanol can be used as a transportation fuel either on its own or as an ethanol-gasoline blend. Ethanol-gasoline blends of up to 10% ethanol can be used without any engine modification or loss in engine performance (Hunt, V.D. (1981) The Gasohol Handbook, New York, Industrial Press). Lignin, the third main component of wood, is a potential raw material for the production of plastics, adhesives and resins (Lora and Glasser (2002) *J. Polymers Environ.* 10:39-47). The use of lignin in high value products, rather than as boiler fuel, will off-set the high costs traditionally associated with the processing of wood and production of ethanol.

Willow biomass plantations can be easily and efficiently established from dormant stem cuttings using mechanical systems. Shrub willows respond to coppicing after the first growing season by prolific production of new stem growth in the second growing season. Above ground woody biomass is harvested during the dormant season. During the spring following each harvest, the remaining portion of the willow plant, known as the stool, responds by producing numerous new stems, initiating a new cycle of growth that can be harvested in another two to four years. This cycle can be repeated for six to eight harvests before the stools need to be replaced.

Lignocellulose is a complex substrate composed of a mixture of carbohydrate polymers (namely cellulose and hemicellulose) and lignin. The conversion of lignocellulosic biomass into ethanol relies mainly on the efficient separation of these cell wall components to allow the hydrolysis of the carbohydrates polymer into fermentable sugars. Most of the processes using high temperature or pressure with acid, caustic or organic solvent are able to provide a cellulose substrate that can be chemically or enzymatically converted into fermentable glucose (Wyman *et al.* (2005) *Bioresource Technology* 96:2026-2032; Mosier *et al.* (2005) *Bioresource Technology* 96:673-86). In general, the yield and hydrolysis rate of cellulose increases when biomass is fractionated under conditions of high temperature and extremes of pH. Under these severe conditions, however, the overall carbohydrate recovery is often compromised due to extensive degradation of the hemicellulose sugars (mainly xylose in hardwood), which comprise a significant fraction of the lignocellulosic feedstock (hardwood: Rughani and McGinnis (1989) *Biotechnol. Bioeng.* 33:681-686; Bakker *et al.* "Biofuel production from acid-impregnated willow and switchgrass"; 2nd World Conference on Biomass for Energy, Industry and Climate Protection, 10-14 May 2004, Rome, Italy; Li *et al.* (2005) *Appl. Biochem. Biotechnol.* 125:175-88; Sassner *et al.* (2005) *Appl. Biochem. Biotechnol.* 121-124:1101-17; Pan *et al.* (2005) *Biotechnol. Bioeng.* 90:473-81; softwood: Boussaid *et al.* (1999) *Biotechnol. Bioeng.* 64:284-9; Yang and Wyman (2004) *Bioresource Technol.* 86:88-95; Knauf and Moniruzzaman (2004) *Intl. Sugar J.* 106:147-50; Mosier *et al.* (2005) *Ibid*). Also, the degradation products generated by extensive hydrolysis (phenol, furans and carboxylic acid) can potentially inhibit further fermentation steps (Palmquist *et al.* (1999) *Biotechnol. Bioeng.* 63(1):46-55; Klinke *et al.* (2004) *Appl. Microbiol. Biotechnol.* 66:10-26). Furthermore, severe pre-treatment conditions, including the use of acid catalysts, can

chemically alter the nature of the recovered lignin. A consequence of this is a decrease in the suitability of the lignin for some high value applications (Lignin Institute Dialogue Newsletter (2001) 9(1); Lora and Glasser (2002) *Ibid*; Matsushita and Yasuda (2003) *J. Wood Sci.* 49:166-171).

When water is used as the sole fractionation agent, the majority of the hemicellulose sugars can be recovered through autohydrolysis (Garrote and Parajo (2002) *Wood Science Technol.* 36:111-123). However, due to inefficient delignification, this maximization of the hemicellulose sugar yield is usually done at the expense of the cellulose/glucose enzymatic conversion (Negro *et al.* (2003) *Appl. Biochem. Biotechnol.* 105:87-100; Chung *et al.* (2005) *Appl. Biochem. Biotechnol.* 121:947-961; Kim and Lee (2006) *Bioresource Biotechnol.* 97:224-232). Use of a second stage oxidative treatment was shown to improve the cellulose/sucrose conversion following the hot water treatment but not always as a result of efficient lignin removal (Brownell and Saddler (1987) *Biotechnol. Bioeng.* 29:228-35; Wyman *et al.* (2005) *Bioresource Technol.* 96:1959-1966; Kim and Holtzapple (2006) *Bioresource Technol.* 97:583-591).

The efficient removal of lignin under mild conditions can be achieved using the OrganoSolv™ process. This type of pre-treatment involves the use of an aqueous organic solvent, usually ethanol, to achieve the simultaneous removal of the hemicellulose sugar and lignin in separated streams. The cost associated with the use of an ethanol solvent is reduced by producing the ethanol on site and efficiently recycling it, as taught, for example, by US Patent 5,788,812. The conversion rate of the cellulose solid fraction provided by aqueous ethanol pre-treatment is mainly affected by the inefficient removal of the hemicellulose sugar when lower water/solvent ratios are used to maximize the lignin recovery (Holtzapple and Humphrey (1984) *Biotechnol. Bioeng.* 26:670-676; Chum *et al.*, (1988) *Biotechnol. Bioeng.* 31:643-649). Increasing the water/ethanol ratio, or the addition of a chemical catalyst to the solvent, increases the hemicellulose sugar removal but is associated with a reduction of lignin removal and increased hemicellulose sugar degradation (Holtzapple and Humphrey (1984) Ibid; Rughani and McGinnis (1989) Ibid; Pan *et al.* (2005) Ibid).

Successful advancements in enzyme production technology have resulted in a lower cost of the hydrolytic enzyme required to obtain a high conversion rate of cellulose to glucose. However, because the enzymatic hydrolysis activity is strongly

inhibited by the hydrolysis products (sucrose and short cellulose chains), simultaneous fermentation of the released sugar (SSF for simultaneous saccharification and fermentation) can greatly improve the overall cellulose/ethanol conversion using lower enzyme loading. Several technologies are now available that allow a broader use of the biomass at lower cost under a variety of less constraining conditions (reviewed in Lin and Tanaka (2006) *Appl. Microbiol. Biotechnol.* 69:627-642).

Whereas the fermentation of glucose can be carried out efficiently by a variety of organisms, the bioconversion of the pentose fraction (xylose and arabinose) presents a challenge. A lot of attention has therefore been focused on genetically engineering strains that can efficiently utilize pentose and convert them to useful compounds, such as ethanol (reviewed in: Aristidou and Penttila (2000) *Curr. Opin. Biotechnol.* 11:187-198). Alternatively, the pentose fraction which is predominantly xylose in hardwood species such as *Salix*, can be recovered from the water stream and converted to xylitol for use as a valuable food product additive. By-product streams from this process (furfural, acetic acid, para-hydroxybenzoic acid and vanillin) may also be fractionated subject to market price. Furfural, the easiest by-product to market, can be obtained by distillation from the same fraction. The acetic acid may also be recovered to produce peroxyacetic acid for pulp.

Ethanol-soluble lignin is considered to be of higher value because of its ease of recovery and its suitability for a wide range of industrial applications compared with water-soluble lignin, such as that recovered from the Kraft process often employed by the pulp and paper industry. Extraction of Kraft lignin requires high volumes of solvent and has a narrower range of applications (Funaoka *et al.* (1995) *Biotechnol. Bioeng.* 46:545-552; Lora and Glasser (2002) *J. Polymers Environ.* 10:39-47; Kubo and Kadla (2004) *Macromol.* 37:6904-6911; Lawoko *et al.* (2005) *Biomacromol.* 6:3467-3473).

Lignin extracted using the OrganoSolv™ process differs significantly from that extracted via the Kraft process. OrganoSolv™ lignin has a molecular weight of 700 to 1550 g/mol, low polydispersity, a glass transition temperature of 70 to 170°C, a high relative amount of phenolic hydroxyl groups, and a low degree of chemical modification (Lora and Glasser (2002) Ibid; Kubo and Kadla (2004) Ibid; Lawoko *et al.* (2005) Ibid). This lignin can be used in the manufacture of molding compounds, urethane epoxy and formaldehyde resins, antioxidants and controlled-release agents.

Ethanol-soluble lignin from hardwoods is recovered by diluting the aqueous ethanol pre-treatment effluent with water and acid to form a solution with a pH of 1.5 to 2.7 and an alcohol content of 30% (v/v) (or a ratio of aqueous-ethanol effluent to the acid water of 0.35 to 0.70). After drying, the precipitated lignin is obtained in the form of a powder (US Patent 5,788,812).

Acid catalyzed OrganoSolv™ pulping was originally developed by Theodor Kleinert as an environmentally preferred alternative to Kraft pulping (US Patent 3,585,104). It was later found that a variation of the operating conditions could very efficiently convert the lignocellulosic material to sugars and lignin. In the 1980s, a 16 liter continuous flow reactor pilot plant that processed bagasse to sugars was built (Dedini, Brazil). A concentrated solution of acetone with a small amount of acid was used to solubilize the lignocellulosic component of the bagasse (US Patent 4,409,032).

An OrganoSolv™ process using aqueous ethanol to produce a clean biofuel for turbine generators was developed by the University of Pennsylvania and the General Electric Company in the 1970s. Subsequent modification by the Canadian pulp and paper industry resulted in the Alcell™ pulping process (US Patent 4,100,016). The long-term economic viability of the Alcell™ process was significantly improved using technology for the recovery of lignin and furfural by-products from the organic pulping liquor (US Patents 4,764,596, 5,681,427 and 5,788,812). A commercial Alcell™ pulping plant processing 30 metric tons of hardwood per day was established in 1989 in New Brunswick Canada. The plant was operated for several years but was eventually shut down due to external economic factors. More recently, a patent application was published relating to an integrated operation for processing sugarcane that combines the OrganoSolv™ Alcell™ process, pulping and fermentation to reduce the capital and operating cost by providing a high degree of internal process recycling (US Patent Publication No. US 2002/0069987).

There remains a need in the art for a process for producing ethanol from woody biomass which can be established at a relatively low cost and be profitable by maximizing the yield and recovery of valuable by products such as natural lignin and xylose.

SUMMARY OF THE INVENTION

The present invention provides an integrated process that allows for rapid production of high volumes of biomass, and the efficient and cost-effective use of plant biomass for production of ethanol, natural lignin, xylose and other co-products. The process employs an optimized pre-treatment that allows efficient fractionation of lignin and hemicelluloses without compromising ethanol yield. Due to the high cost associated with biomass production, the optimum utilization of all lignocellulosic components of the feedstock as marketable products is essential in order to obtain ethanol at a commercially competitive price. Due to the complex nature of the lignocellulosic components and the technical difficulties associated with their separation and conversion, a compromise in the recovery of all valuable components is required to reduce the cost of producing sugars from woody biomass.

In one embodiment, the pre-treatment process, which is based on a combination of an OrganoSolv™, or ethanol/water (for example 50% to 80% ethanol in water), treatment and a hot water wash, is optimized for the fractionation of *Salix*, and improves the overall biomass utilization by maximizing the lignin recovery, as well as the overall carbohydrate recovery, without compromising cellulose/glucose conversion. Product recovery under mild conditions is further improved by applying the pre-treatment in a continuous manner (Nagle *et al.* (2002) *Biotechnol. Prog.* 18:734-738; Yang and Wyman (2004) Ibid; Wyman *et al.* (2005) Ibid; Liu and Wyman (2005) *Bioresour. Technol.* 96:1978-1985). In addition to improving the yield of each product stream, the economy of the inventive pre-treatment process is improved by avoiding the addition of chemical catalysts which are expensive, require neutralization of solid fractions, chemically modify and reduce the value of the recoverable lignin, and are costly to remove from the liquid stream.

In one embodiment, the inventive process employs hardwood, preferably *Salix* spp, although other plant materials, such as wheat straw, may also be effectively processed using the methods disclosed herein. As a biomass feedstock, *Salix* spp. offer the advantages of requiring low energy input in relation to the biomass produced, being easy to propagate from unrooted cuttings, having genetic diversity and a short breeding cycle, having good winter standing, being inexpensive to harvest and chip, and vigorously re-sprouting after each harvest. In addition, growing of *Salix* requires significantly fewer pesticides than traditional agriculture, uses fewer

herbicides than many crops and may be grown for ecosystem restoration (Kuzovkina and Quigley (2005) *Water, Air, and Soil Pollution* 162:183-204). Because *Salix* can grow with ease on marginal land, it is particularly suitable for restoration of used pastoral farming land (Wilkinson (1999) *Biomass Bioenergy* 16:263-275). *Salix* culture can contribute to the reduction of nutrient leaching, soil acidification and erosion, and has been shown to improve the nitrogen balance and increase soil fertility (Hasselgren (1998) *Biomass Bioenergy* 15:71-74; Borjesson (1999) *Biomass Bioenergy* 16:137-154; Roygard *et al.* (2001) *J. Environ. Qual.* 29:1419-1432). Furthermore, like most woody crops, *Salix* production is carbon dioxide neutral, and is therefore strategically important in efforts to reduce global warming (Lemus and Lal (2005) *Crit. Rev. Plant Sci.* 24:1-21).

The process employs a low boiling solvent, preferably ethanol, for easy lignin recovery and solvent recycling. Ethanol also offers the advantage that it is a product of the processing of cellulose and therefore can be readily recycled as part of the biorefining process. Ethanol pretreatment without the use of an acid catalyst is preferred to achieve high recovery of chemically unmodified natural lignin with higher potential revenues and also to increase the recovery and integrity of the xylan polymer in the subsequent hot water treatment. The disclosed process, which in certain embodiments uses continuous processing, also reduces the recondensation of lignin often seen in a batch reactor by allowing removal of solvent while still at temperatures well above the normal boiling point of the solvent.

In one embodiment, the process disclosed herein includes the following steps:

(a) contacting a continuous flow of plant material, such as wood chips, with a counter-current continuous flow of an aqueous ethanol solution (preferably comprising 50% to 80% ethanol) at elevated temperature and pressure (for example at a temperature between 170°C and 210°C and a pressure between 19-30 barg) for a period of time sufficient to produce ethanol-soluble lignin and plant pulp material, wherein the plant pulp material is depleted of lignin and has a high concentration of cellulose;

(b) separating ethanol from the plant pulp material and recovering the ethanol-soluble lignin from the ethanol;

(c) contacting the plant pulp material with water at elevated temperature and pressure (for example at a temperature between 160°C and 220°C

and a pressure between 12-25 barg) for a period of time sufficient to remove hemicellulose sugars from the plant pulp material;

(d) separating the water from the plant pulp material and recovering water-soluble sugars, acetic acid and/or furfural from the water; and.

(e) contacting the resulting plant pulp material with: (i) an aqueous solution comprising cellulase, β-glucosidase and temperature-tolerant yeast, (ii) yeast growth media, and (iii) buffer, whereby cellulose present in the plant pulp material is hydrolyzed to glucose.

The resulting glucose may then be fermented to produce ethanol, which is in turn recovered by way of distillation and dewatered by technologies such as use of a molecular sieve.

The ethanol pretreatment (step (a)) may be carried out substantially in the absence of an acid catalyst. For example, the reaction mixture may contain less than 1% of an acid catalyst. In certain embodiments, the ethanol pretreatment is carried out at a pH in the range of 3 to 9.5. Similarly, in certain embodiments, the hot water treatment (step (c)) is carried out at a pH in the range of 2 to 7.

Methods for propagating plants of a Salix species are also provided herein. In certain embodiments, such methods comprise:

(a) culturing at least one shoot of a first plant selected from the group consisting of *Salix* species and collecting at least one cutting from the shoot, wherein the cutting contains at least one node;

(b) cultivating the cutting in a composition for a period of time sufficient to form a second plant, wherein the composition comprises benzyladenine, activated charcoal and at least one medium selected from the group consisting of: Murashige and Skoog medium and McCown Woody Plant medium;.

(c) obtaining at least one subsequent cutting from the second plant, wherein the subsequent cutting contains at least one node; and

(d) culturing the subsequent cutting in McCown Woody Plant medium for a period of time sufficient to form a subsequent plantlet.

Plants that may be effectively propagated using such methods include, but are not limited to, *S. viminalis* and *S. schwerinii* 'Kinuyanagi'.

These and additional features of the present invention and the manner of obtaining them will become apparent, and the invention will be best understood, by reference to the following more detailed description and the accompanying drawings.

BRIEF DESCRIPTION OF THE FIGURES

Fig. 1 is a schematic of the first stage (ethanol extraction) of the disclosed integrated process for the production of biofuel from wood chips.

Fig. 2 is a schematic of the second stage (hot water treatment) of the disclosed integrated process for the production of biofuel from wood chips.

Fig. 3 is a schematic of the third stage (simultaneous saccharification and fermentation) of the disclosed integrated process for the production of biofuel from wood chips.

Fig. 4 is a schematic of the fourth stage (product separation/purification) of the disclosed integrated process for the production of biofuel from wood chips.

Fig. 5 is a schematic of an experimental 100 ml digestor for the pre-treatment of biomass

Fig. 6 shows a schematic of a 3 l packed-bed experimental digestor for the pre-treatment of biomass

Fig. 7 is a schematic of a 40 l batch experimental digestor for the pre-treatment of biomass.

Fig. 8 is a graph showing the effect of time on the DM (dry mass) removed from *Salix* chips with 70% ethanol solvent at three different scales (100 ml, 3 l and 40 l), expressed as a percentage of the initial DM loaded.

Fig. 9A and B shows the ratio of DM and lignin removed from *Salix* chips with 70% ethanol and expressed as a percentage of the initial DM loaded. Fig. 9A shows the results obtained with the 3 l digestor, and Fig. 9B shows the results from individual experiments in the 40 l batch digestor.

Fig. 10 is a graph showing the effect of time on the DM removed from *Salix* chips with water solvent applied as a primary treatment or after an ethanol treatment at two different scales (100 ml, 3 l), expressed as a percentage of the initial DM loaded.

Fig. 11 is a graph showing the proportion of lignin in the DM removed from *Salix* chips with 70% ethanol in three different scales (100 ml, 3 l and 40 l), expressed as a percentage of the total DM removed.

Fig. 12 is a graph showing the proportion of the total available lignin recovered after pre-treatment of the *Salix* chips with 70% ethanol in the 100 ml, 3 l and 40 l digestors, expressed as a percentage of the lignin content in the untreated chips.

Fig. 13 shows the ratio of DM and lignin that was removed from *Salix* chips with hot waters applied as a primary treatment or, after a 70% ethanol treatment in the 100 ml and 3 l digestors, expressed as a percentage of the initial DM loaded.

Fig. 14 is a graph showing the conversion of cellulose recovered following Organosolv™/liquid hot water treatment of *Salix* chips into glucose by enzymatic hydrolysis, compared with commercially obtained pure cellulose and cellulose recovery from untreated *Salix* chips.

Fig. 15 is a graph showing the accumulation of xylose, furfural, acetic acid and glucose during the hot water treatment of 70% ethanol treated *Salix* chips in the 3 l digestor.

DETAILED DESCRIPTION

As discussed above, the present invention provides an economically-viable integrated process for the biorefining of lignocellulosic material from plants, such as *Salix* spp., to produce ethanol and natural lignin. Other types of feedstock that may be effectively employed in the disclosed process include dedicated short rotation woody or herbaceous biomass (for example, *Miscanthus*, switchgrass), woody and agricultural waste (e.g., wheat straw, rice straw, corn stover or sugar cane bagasse) and dedicated energy crops. In certain embodiments, the plant material is selected from the group consisting of: Salix, Poplar, Eucalyptus, switch grass, miscanthus, sugar cane bagasse, soybean stover, corn stover, rice straw, barley straw, wheat straw, corn fiber, wood fiber, and combinations thereof.

In one embodiment, the process employs a continuous flow counter-current or co-current digestor. Use of such a digestor results in faster processing rates, increased throughput and increased efficiency. As such digestors run continuously, they require less maintenance and less labor than batch digestors. In addition, displacement wood

pulping is more efficient than batch processes and differential reaction times are possible.

Crops of *Salix* are harvested, air-dried and stockpiled. If reduction of the particle size of the harvested *Salix* is desired prior to processing, this can be achieved using a chipper or similar device. In one embodiment, *Salix* particles of approximately 5 mm to 5 cm in size are employed in the process disclosed herein.

The first stage of the process disclosed herein is an OrganoSolv™, or ethanol, extraction (illustrated schematically in Fig. 1). This involves continuous contacting of the wood chips with a counter-current flow of a solution of up to 70% ethanol in water, undertaken at a temperature of approximately 170°C to 210°C and a pressure of 19-30 barg. In one embodiment, the digestor is a screw contactor operating with wood chips being fed and discharged via cup and cone pressure plugs or feed screws. Solvent passes against the flow of solids so that chips exiting the machine are exposed to fresh (solute free) ethanol solution, while chips entering the digestor, which have the highest extractable content, are exposed to the most solute laden solvent solution. Solvent entering the digestor is pressure pumped to maintain the operating pressure therein and to provide the hydraulic drive to pass against the flow of chips. Solvent from within the digestor is re-circulated through external heaters, for example steam heaters, on a continuous basis to bring the wood chips up to the operating temperature quickly and to maintain the temperature. Operating conditions (such as time, temperature profile, pressure and solid/liquid ratio) within the digestor are optimized to provide maximum removal of water insoluble lignin from the wood chips. As the wood chips pass from the digestor and are exposed to lower pressures, a portion of the solvent content therein will evaporate, resulting in cooling of the wood chips.

In an alternative embodiment, the wood chips are displaced in the digestor using gravity in a downward gradient. Solvent entering the digestor is pumped upward passing against the flow of solid.

Chips discharged from this first stage of the process will still contain some ethanol which must be removed prior to the subsequent water extraction. This is achieved by means of a steam stripping operation. The vapors are recovered from both this operation and from the flash evaporation of depressurized solids, noted above, and are re-used directly with the fresh solvent stream. In this way the latent heat content of the vapors is recovered.

The de-solventized and lignin-depleted chips then pass into a second stage of extraction (illustrated schematically in Fig. 2) undertaken in comparable equipment, and in a comparable fashion to the ethanol extraction described above, with the difference being that high pressure hot water (preferably at a pressure of approximately 12 to 25 barg and a temperature of approximately 180°C to 220°C) is utilized to solubilize the xylose fraction of the chips.

As the solids exit the hot water digestor and the pressure is reduced, flash evaporation of steam will occur. This is recovered for direct re-use with the fresh hot water entering as fresh extraction solvent at the solids discharge end of the digestor. The chips will be cooled as a result of this flash evaporation.

What remains of the initial wood chips after two stages of extraction will be primarily cellulose in a hydrolyzable pulp. This material is transferred to one of a series of batch SSF (simultaneous saccharification and fermentation) vessels, together with temperature-tolerant yeast, yeast growth media, cellulase, β-glucosidase, buffer and water to dilute the solids to the required solid/liquid ratio (illustrated schematically in Fig. 3). In these vessels, the cellulose is hydrolyzed to produce glucose, which is in turn fermented to produce ethanol. Low levels of ethanol are maintained in the fermentor by continuous removal of the produced ethanol to avoid fermentation inhibition. The process is optimized for maximum cellulose hydrolysis and fermentation to ethanol. The vessel contents at the end of the batch fermentation will be discharged via a filter and the retained solids will be recovered for disposal as cattle feed. Residual components in this fraction may also be recovered.

The filtrate, consisting primarily of ethanol and water, is concentrated to produce hydrous and/or anhydrous ethanol as desired, using methods well known to those of skill in the art. A portion of the hydrous ethanol product is re-utilized in the first, ethanol extraction, stage.

Additional products are separated and purified as illustrated schematically in Fig. 4 and discussed in detail below.

Lignin Recovery

The black liquor (ethanol/water/lignin solution) exiting the ethanol digester in the first stage is depressurized before passing to a flash cooling vessel in which the solvent (primarily ethanol) is evaporated. Further ethanol is then steam-stripped from the liquor prior to transfer to one of a series of batch vessels in which precipitation of

lignin from the liquor is promoted through dilution (3 to 10 times) with water and lowering of pH (<3) by acid addition. The resulting lignin precipitate is then separated by filtration and dried as a crude product stream. The aqueous filtrate is combined with the hot water stream for xylose and water soluble product recovery.

Xylose Recovery

The hot water extraction product stream from the second stage containing primarily xylose (with some low molecular weight lignin, some glucose, and other C5 and C6 sugars) is depressurized before cooling by flash evaporation of water. As the temperature is dropped, the low molecular weight compounds and molecules precipitate from solution. These are then separated by filtration.

The filtrate from the low molecular weight filtration contains the xylose fraction as well as a range of other components including furfural, acetic acid, para-hydroxybenzoic acid and vanillin. An additional module carries out concentration, decolorization, deionization and chromatography steps, and produces pure xylose.

Solvent recycling

The ethanol and water streams can be recycled through the pulp biomass to increase product concentration, or processed for product recovery. Subject to processing conditions during the two extraction operations, varying degrees of at least acetic acid and/or furfural will be contained in the stream passing to the ethanol concentrator. These fractions from the ethanol/water distillation can be concentrated and recovered using methods well known in the art.

The following examples are offered by way of illustration and not by way of limitation.

Example 1

Biorefining of *Salix* biomass

Preparation and composition analysis of untreated *Salix* biomass

Stems of *Salix viminalis* or *Salix schwerinii* 'Kinuyanagi' were chipped with a garden mulcher. The wood chips were dried at 40°C for 24 hours and sieved by hand between two wire meshes of British test sieve with apertures of 2.8 and 4 mm. The composition of the sieved and unsieved *Salix* chips was assessed, with the results being shown in Table 1. The mass composition was assessed using laboratory analytical procedures (LAPs) developed by the National Renewable Energy Laboratory (NREL, Golden, CO). Values are expressed as gram of component per 100 g of dry untreated chips. Extractives were isolated using a Soxhlet extractor, dried and weighed. Lignin concentrations were determined after chemical hydrolysis of the *Salix* chips (4 hours with 72% sulfuric acid at 102°C). Acid soluble lignin was measured by densitometry at 320 nm and the concentration of the non-acid soluble lignin was measured by weight minus ash. The percentage of glucan and xylan present in the samples were determined after chemical hydrolysis (4 hours with 72% sulfuric acid at 102°C). Acid soluble sugar was measured by HPLC using the appropriate range of xylose and glucose standards.

Table 1: Composition of untreated *Salix* biomass (* = Sieved material)

Salix variety	Extractive (%)	Lignin (%)			Sugar (%)	
		Soluble	Insoluble	Total	Glucan	Xylan
*Salix viminalis**	16	2	31	33	23	9
Salix viminalis	8	3	24	27	34	8
Salix schwerinii	6	5	23	28	32	14
Salix schwerinii Kinuyanagi	4	5	22	27	33	12
Salix schwerinii Kinuyanagi	4	3	25	28	33	9
Salix schwerinii Kinuyanagi + *Salix viminalis*	2	4	28	32	35	9
Salix schwerinii Kinuyanagi + *Salix viminalis*	2	4	25	29	30	8
Average	**6**	**4**	**25**	**29**	**31**	**10**
Standard Deviation	**5**	**1**	**3**	**3**	**4**	**2**

Pre-treatment of *Salix* biomass

The pre-treatment of *Salix* chips was tested in 100 ml experimental digestor and 3 l packed-bed experimental digestor that were able to process 6 g and 300 g of

dry wood chips, respectively. The design of these two digestors is illustrated in Fig. 5 (100 ml digestor) and Fig. 6 (3 l packed-bed digestor). A 40 l digestor was also designed and tested for the recovery of natural lignin from *Salix* biomass at larger scale (Fig. 7). This 40 l digestor is able to process 6 kg of dry biomass.

Description of the 100 ml experimental digestor (Fig. 5)

The 100 ml capacity experimental pre-treatment digestor **1** consisted of a one inch tube **10** with an externally coiled heating coil **11** and fiberglass insulation **19**. Tube **10** was connected to a Swagelok™ end-cap **12** which in turn was connected to a welded pressure transducer **13** by means of a ¼ inch tube **14** and to a thermocouple port **15**. The other end of tube **10** was connected to a one inch integral bonnet needle valve **16** connected to a collection tube **17** of the same length, which in turn was connected to a ¼ inch integral bonnet needle valve **20**. The temperature was controlled by a thermocouple **18** wedged underneath the heating coil and connected to a controller **21**. This configuration facilitated the removal of solvent at a temperature well above the boiling point of the solvent.

Operation of the 100 ml experimental pre-treatment digestor

For the ethanol pre-treatment, the digestor of Fig. 5 was loaded with 6.54 g of dried wood chips and 83.5 ml of ethanol (50 to 70%). The digestor was sealed at all Swagelok™ fittings and the bonnet needle valve closed. The digestor was then heated to the selected process temperature (170°C -195°C) while being agitated manually to ensure that the process reached equilibrium quickly. Once the desired temperature was reached, the reaction was allowed to proceed for 60 minutes with periodic manual agitation. At the end of the reaction time, the digestor was inverted and the bonnet needle valve opened to allow the solvent to drain into the collection tube. A fine mesh, positioned in the digestor against the valve, retained the solid fraction in the reaction vessel. The content of the digestor was cooled down and the solvent was removed from the collection tube.

For the hot water treatment, the digestor was filled with 90 ml of wash water, sealed and heated to a specified temperature in the range of 180 to 220°C. After the desired incubation time at the target temperature, the hot water was removed using the

same method as described for solvent removal. The remaining pulp was dried and submitted to hydrolysis.

Description of the 3 l packed-bed digestor (Fig. 6)

The 3 l packed-bed digestor **23** shown in Fig. 6 consisted of a stainless steel digestion chamber **25** housing a wire mesh sample basket **27** and sealed with Swagelok™ end cap fittings **26**. There were four outlets and two inlets from the digestion chamber **25**. A ¼" tube outlet **24** connected the digestion chamber **25** to a pressure transducer **32**. A ½" tube pressure relief valve outlet **28** housed a pressure thermocouple **39** measuring the pressure in digestion chamber **25**, and was connected to a 50 barg pressure relief valve **38** and a water tank inlet **54**. A ¾" tube circulating fluid inlet **33** allowed re-circulation of fluids into digestion chamber **25** and application of pressure from a pressurized nitrogen cylinder through a nitrogen cylinder connector **44**. A 1" tube circulating fluid outlet **40** allowed re-circulation of circulating fluids out of digestion chamber **25** and a 1/8" tube thermocouple inlet **55** measured the temperature inside the digestion chamber **25**. A thermocouple **56** connected to a circulating fluid tube **45** measured the temperature of the circulating fluid in the circulating fluid tube.

A motor **34** rotated a shaft **46** housed in a 2" tube **48** that was connected to a variable speed drive pump **31** containing four propellers **47** and sealed using several ECOFLON$_2$ rotary seals. Pump shaft T pieces **49** held the 2" tube **48** in place. When shaft **46** is rotated at a speed of 1,400-2,800 rpm, fluid is forced through pump **31** and circulated through heating loop **29** containing a heater construction **35**, and through the digestion chamber **25** to enable co- or counter-current continuous flow.

A recycle line T piece **51** was connected to a needle valve **36** and a 10 ml bottle **37** to enable taking of circulating fluid samples when the digestor is operating. To take a sample of circulating fluid, valve **36** was opened and bottle **37** filled. The valve **36** was then closed, and bottle **37** was cooled and removed for sample analysis.

The heater construction **35** consisted of a ¾" heating tube **52** with six electrical heating elements **53** sealed onto it with conductive cement. The heating elements **53** were connected to a controller **41**, which was connected to a control thermocouple **42** measuring the temperature of the circulating fluid in the middle of heating loop **29**, and an over-temperature controller **43** set at 250°C and measuring the

temperature of the circulating fluid near an outlet **50** of heating loop **29**. The heating tube **52** was insulated with fiberglass.

Operation of the 3 l packed-bed digestor

The 3 l packed-bed digestor shown in Fig. 6 functioned under the same principle as the 100 ml digestor with the exception that the digestion chamber **25** contained the biomass within wire mesh sample basket **27** and the solvent was circulated within the heating loop **29** by way of variable speed drive pump **31**. The solvent was heated electrically to ensure that the target temperature for digestion was reached. The kinetics of the extraction process was determined by collecting samples of the mobile solvent by way of needle valve **36** and 10 ml bottle **37** situated downstream of the pump.

The chipped wood feedstock (up to 300 g) was placed in the wire mesh sample basket **27**, which fitted tightly inside the vessel. The vessel with the sample basket was filled with up to 3 l of solvent, and the reactor was sealed tightly with Swagelok™ fittings. The recycle loop was filled with liquid by adding water through the water tank inlet **54**. When the reactor was sealed completely, the circulator and temperature controllers were switched on. The pressure transducer **32**, thermocouples **39** and **55** in the reactor, and thermocouple **56** on the tube surface **61** were monitored using a PicoLog Recorder (Pico Technology, Cambridge, UK).

Description and operation of the 40 l batch digestor (Fig. 7)

The 40 l packed-bed digestor shown in Fig. 7 was fabricated from a section of 210 mm high-pressure mild steel tubing which formed a reactor vessel **64**. A surrounding 300 mm tube formed a heating coil **63** which was partitioned by a spiral steel baffle into a spiral flow channel. The reactor vessel **64** and heating coil **63** were surrounded by glass fiber insulation **62**. The heating coil **63** was connected to an oil heating circuit **76** and oil inside the oil heating circuit **76** was heated by a heater **69** driven by 6 kW of electrical heating elements. The oil was circulated through the oil heating circuit **76** by a pump **68**, and could also be diverted by two loop valves **71** to a cooling loop **72** immersed in a water bath **77** to enable faster cooling of the reactor vessel **64**. The heater and pump were controlled by a thermostat **70** and a process controller **67**. An oil reservoir **73** connected to the oil heating circuit **76** was used to

accommodate thermal expansion of the oil. In operation, the reactor vessel **64** was filled with about 6 kg of *Salix* biomass and 30 to 40 liters of 70% ethanol via a funnel **57** and an upper ball valve **58**. The reactor vessel **64** was then sealed and heated, taking 3 to 4 hours to reach operating temperature (185°C). The temperature was monitored by a temperature probe **61** and the pressure by a pressure gauge **59**. The pressure gauge was connected to a pressure relief valve **60**. A sampling port **66** was attached to a lower ball valve **65** in the reactor vessel **64**. To enable time-course samples of the liquid phase to be taken during the extraction step, a liquid sampling valve **(not shown)** can be attached to the sampling port **66**. After the appropriate residence time, oil circulation was switched to the cooling loop **72** by means of the loop valves **71** and the reactor vessel **64** allowed to cool. After removal of the liquid sampling valve **74**, the treated biomass in the form of lignin-containing black liquor was drained from the reactor vessel **64** by means of the lower ball valve **65** and sampling port **66**, and washed with 70% ethanol and water to remove additional lignin. Alternatively, attachment of a steam explosion valve **(not shown)** to the sampling port **66** enabled a steam explosion step to be performed on the biomass while still at high temperature and pressure.

Results

Mass Balance

Using the experimental digestors as described above, *Salix* biomass was fractionated into two fractions: 1) an ethanol and/or water soluble fraction (hydrolysate, Hyd.), and 2) a solid fraction (pulp). Table 2 represents the mass partition of the *Salix* chips following various pre-treatment sequences. Treatments were done with 70% ethanol at 170°C to 190°C for 60 minutes either before or after water treatments performed for 30 min at 170°C to 190°C. In this example, all pre-treatment experiments were initiated with 6.54 g of dry *Salix* chips (n=3-5) in the 100 ml digestor. The mass in the hydrolysate represents the dry mass (DM) recovered after evaporation of hydrolysate, and the mass in the pulp fraction corresponded to the DM of the residual insoluble material yielded after each pre-treatment. These results show that the addition of a second pre-treatment increased the displacement of mass by 10% toward the hydrolysate and that the sequence in which the two treatments are performed does not have a great impact on the final amount of mass displaced.

Table 2: Mass balance of pre-treated *Salix* biomass

Treatment	Mass in hydrolysate		Mass in pulp fraction	
	g ± Std Dev	% ± Std Dev	g ± Std Dev	% ± Std Dev
Organosolv™	1.87 ± 0.26	28.53 ± 4.04	4.79 ± 0.06	73.24 ± 0.92
Hot water	1.72 ± 0.19	26.24 ± 2.91	4.53 ± 0.07	69.27 ± 1.07
Organosolv™ -Hot water	2.91 ± 0.32	44.40 ± 5.00	3.81 ± 0.05	58.26 ± 1.68
Hot water- Organosolv™	2.75 ± 0.26	41.96 ± 3.93	3.72 ± 0.05	56.88 ± 1.83

The kinetics of mass removal during the primary treatment with 70% ethanol was studied in the 3 l packed-bed digestor. Fig. 10 presents the average amount of DM removed (expressed as a percentage of the initial DM loaded) in a set of five experiments performed in the 3 l packed-bed digestor with 70% ethanol for 60 to 480 minutes at a temperature varying between 175°C and 195°C. This set of data, obtained from the pre-treatment of 250 g of dry *Salix* chips, was compared with the percentage of mass removed with 70% ethanol using the smaller (100 ml; 6.54 g) or larger (40 l batch; 30 to 40 kg) digestors at various times.

Fig. 8 shows that a three times longer incubation was required using the 3 l packed-bed digestor to remove comparable amounts of dry matter as the smaller, 100 ml digestor in 60 min. Therefore, incubation times varying between 200 and 400 minutes were assayed for optimum mass removal in the larger 40 l digestor. As shown in Fig. 8, in this range of incubation time, 20 to 30% of the input DM was efficiently removed with 70% ethanol at the 40 l scale. Fig. 9 illustrates the ratio of dry matter and lignin removed by the 70% ethanol as the percentage of the DM loaded, with the results for the 3 l digestor being shown in Fig. 9A and the results for the 40 l batch digestor being shown in Fig. 9B. The average DM removed in 22 extractions with 70% ethanol in the 40 l batch digestor (Fig. 9B) was 25 % ± 3 in a running time varying between 200 and 400 minutes at an initial liquid loading ratio (iLLR; l solvent per kg iDM).

Fig. 10 presents the ratio of DM removed when untreated *Salix* dry chips and *Salix* dry chips pre-treated with 70% ethanol were treated with hot water (170°C to 195°C) in the 100 ml and 3 l digestors. As seen earlier with the 70% ethanol treatment, the ratio of DM remove removed was lower when using the 3 l packed-bed as compared with the smaller 100 ml digestor. Fig. 10 also shows that an increased incubation time of the untreated chips in the hot water did not result in an increase of

DM removed as it did for longer incubation in 70% ethanol (shown in Fig. 8). As in the 100 ml digestor, when the hot water treatment of *Salix* chips that were pre-treated with 70% ethanol was performed in the 3 l packed-bed digestor, an additional 10% of DM removal was achieved.

Mass Composition

The Organosolv™/hot water sequence gave optimum lignin and sugar recovery. Table 3 below shows the representative composition of the hydrolysate and pulp fraction obtained after sequential treatment of 6.54 g, 250 g or 35 kg of *Salix* chips with 70% ethanol at 175°C to 195°C for 60 to 345 minutes followed by water treatment at 170°C to 195°C for 30 to 375 minutes.

The composition of the comparative untreated *Salix* was the average of the analysis of untreated *Salix* varieties described in Table 1. The concentration of lignin in the hydrolysate sample was determined after aqueous acid precipitation of the lignin, separation and drying and weighting of the precipitate lignin. This weight measurement of lignin concentration was shown to correlate with measurement obtained by size exclusion chromatography of the same precipitated lignin and interpretation of the retention time with reference to appropriate pre-run peptide standards. The glucose and xylan concentration in the hydrolysate was directly measured by HPLC using the appropriate range of standards. The composition of the pulp was assessed as described earlier for the untreated *Salix* chips.

Lignin recovery

At all scales (100 ml, 3 l packed-bed, and 40 l batch), the sequential 70% ethanol and hot water treatment resulted in the removal of over 30% of the total lignin content of the untreated chips (Table 3 below). The majority of the lignin (28 to 32%) was solubilized during the primary treatment with 70% ethanol solvent and an additional 3 to 8 % of the initial lignin was removed in the subsequent water treatment.

As shown in Fig. 11, the ratio of lignin to DM removed by the 70% ethanol treatment reached 35% in the first hour of treatment at a temperature of 170°C to 190°C using the 100 ml and the 3 l packed-bed digestors. The lignin composition of the DM removed in the 3 l packed-bed digestor during the second hour of treatment increased by 5% and reached 50% after 4 hours. After 8 hours, the lignin content of

the DM removed increased only by another 10% to reach 60%. Fig. 11 also shows that, in the 40 l batch digestor, the ratio of lignin to DM removed varied between 30 to 48% when *Salix* dry chips were treated with 70% ethanol solvent. Fig. 12 illustrates the proportion of the total lignin content in the untreated chips that was recovered in the 70% ethanol solvent using each of the three digestors. The higher recovery of lignin (32% ±3) in 60 minutes, using the smaller 100 ml digestor, reflects the higher rate of DM removal achieved with this digestor. With the 3 l packed-bed digestor, similar recovery was achieved within 200 to 240 minutes of treatment. The amount of lignin recovered using the 40 l batch digestor varied between 22 and 44% of the initial lignin content of the *Salix* chips corresponding to 6 to 13 % of the initially DM loaded.

Fig. 13 shows the ratio of DM and lignin removed by hot water treatment using the 100 ml and 3 l packed-bed digestors, expressed as a percentage of the DM loaded. When the hot water was applied as a primary treatment, up to 3% of the initial DM was rapidly recovered as lignin in the water solvent (within the first 30 min of treatment, corresponding to 10% of total lignin available). When the hot water was applied after the 70% ethanol treatment, no more than 1% of the initial DM was recovered as lignin in the water solvent (3% of the total available lignin in the untreated *Salix* chips).

The lignin precipitated from the ethanol hydrolysate by addition of acidic water had an average molecular weight of approximately 2,000 Daltons and was estimated to be small pentameric to decameric polymers with a guaiacyl:syringyl unit ration of 1:4 as shown by NMR spectroscopy analysis. NMR analysis also showed that the *Salix* lignin underwent little modification under the optimum pre-treatment conditions (70% ethanol at 195°C for 60 minutes).

Table 3 shows the composition of treated *Salix* wood chips after pre-treatment with 70% ethanol at 175°C to 195°C (60 min in 100 ml digestor, 180 min in the 3 l packed-bed digestor and 345 min in the 40 l batch digestor) followed by water treatment at 170°C to 190°C (30 min in the 100 ml digestor, 180 min in the 3 l packed-bed digestor and 375 min in the 40 l batch digestor), compared with untreated *Salix* wood chips.

Table 3

Scale & Component	Composition Un-Treated *Salix* chips (% DW chips)	Composition of solid and liquid stream after chips pretreatment (% of total DW In)				Product Recovery (% of total component in untreated chips)			
		Hydrolysate				Hydrolysate			
		Ethanol	Water	Pulp	Total	Ethanol	Water	Pulp	Total
100 ml	**DM**	**26.5** ± 4.04	**17.9** ± 5.00	**58.3** ± 1.83	**102.7**				
Lignin	29 ± 3	9.3	1.0	10.5	21	32	3	36	72
Glucan	31 ± 4	nd	nd	30.4	30	nd	nd	98	98
Xylan	10 ± 2	nd	2.1	4.6	7	nd	21	46	67
Other	30	17.2	14.8	12.8	45	57	49	43	149
3 l	**DM**	**25**	**15**	**60**	**100**				
Lignin	29 ± 3	8.1	0.5	12.2	21	28	2	42	72
Glucan	31 ± 4	0.1	1.25	38.0	39	0	4	123	127
Xylan	10 ± 2	0.4	2.4	0.04	3	4	24	0	28
Other	30	16.38	10.9	9.8	37	55	36	33	123
40 l	**DM**	**26**	**14**	**60**	**100**				
Lignin	29 ± 3	9.1	nd	17.0	26	31	nd	59	90
Glucan	31 ± 4	nd	nd	32.6	33	nd	nd	105	105
Xylan	10 ± 2	0.0	nd	0	0	0	nd	0	0
Other	30	17.0	nd	10.4	27	56	nd	35	91

Glucose recovery and fermentation to ethanol

Pre-treatment of *Salix* chips yielded most of the cellulose in the pulp as shown by the recovery of more than 98% of the total input glucan in this fraction at each of the digestor scales tested (100 ml, 3 l or 40 l digestors, Table 3). As shown in Fig. 15 and Table 4, complete conversion of the recovered cellulose into glucose was achieved after a standard five hours treatment with cellulase (*Trichoderma reesei* (Celluclast, Novozyme, Denmark)) at 80 pfu per gram of glucan (theoretical) and 0.05% beta glucosidase (*Aspergillus niger* (Novozyme 188)) as recommended by the enzyme manufacturer. Also, this result indicated that the residual lignin and xylose in the pulp, at cellulose loading ratio of 1%, did not interfere with the enzyme activity (Tables 3 and 4). This provided a glucose substrate at a concentration of 10 to 12 g per liter for fermentation to ethanol.

Table 4: Efficiency of enzymatic digestion of pre-treated *Salix* chips at constant enzyme loading (80 pfu/g cellulose)

Digestor	Pre-Treatment	Cellulose loading (% in enzyme reaction)	Agitation	Cellulose digestion (%)
100 ml	70% ethanol and hot water	1	Shaking	100%
3 l		1	Shaking	100%
40 l	70% ethanol	5	Shaking	46.31%
		4	Shaking	51.91%
	70% ethanol and hot water	4	Shaking	65%
		5	Shaking	76%
		6	Rolling	91%
		8	Shaking	61%
		8	Rolling	70%
		11	Shaking	41%

The effect of the hot water treatment on the hydrolysis of the 70% ethanol treated chips was observed when the enzymatic reaction was performed using higher concentration of cellulose (cellulose loading ratio >4). As shown in Table 4, over 20% more glucose was produced at equivalent cellulose loading of 4-5%, when the 70% ethanol pre-treated chips were also treated with hot water. This improvement of cellulose digestion at higher loading ratio probably reflected the lower content of lignin and xylose observed in the pulp provided after hot water treatment.

The digestibility of the cellulose yielded by the 70% ethanol and hot water treatment was further improved by providing agitation using rollers instead of using a flask shaker during the enzymatic reaction (Table 4).

Glucose was fermented to ethanol using 64 ml hydrolysate and 4.5 ml Still Spirits Temperature Tolerant Turbo Yeast (Brewcraft USA, Portland, OR) in 6.4 ml 10x YP medium (YP medium: 100 g/l yeast extract and 200 g/l peptone). The reaction was allowed to proceed at 40°C with agitation at 200 rpm until the growth curve of the yeast had reached a plateau, determined by measuring the OD_{600} of hourly samples. The amount of ethanol and remaining glucose in the medium was determined by HPLC. The yield of ethanol from the digested *Salix* cellulose using *Saccharomyces cerevisiae* was 0.32 g of ethanol per g of glucose representing 62% of the theoretical yield of 0.51 g of ethanol per g of glucose.

Xylose recovery

Because very small amounts of xylose and acetic acid were detected in the 70% ethanol solvent after the pre-treatment of the *Salix* chips (Table 3), we concluded that 70% ethanol treatments have little effect on the hemicellulose degradation. The recovery of hemicellulose sugars varied according to the hot water pre-treatment conditions.

When a short hot water treatment (30 min) was performed on *Salix* chips pre-treated with 70% ethanol in the 100 ml digestor, residual xylose in the pulp fraction (4.6% of DM loaded = 46% xylose available; Table 3) indicated an incomplete hemicellulose break down.

Fig. 15 shows the level of accumulation of xylose and furfural in the hot water applied after the 70% ethanol pre-treatment in the 3 l packed-bed digestor. The level of xylose peaked at 2.4 % of the DM loaded (24% of the total xylose available) after 120 min, at which time the level of furfural production increased, indicating further degradation of the xylose yielded through efficient hydrolysis of hemicellulose sugar. As a result, the cellulose pulp that was produced after the 70% ethanol pre-treatment and longer hot water treatment contained greatly reduced levels of xylose (Table 3, <0.1% of DM loaded). Another indication of efficient hemicellulose hydrolysis during the hot water treatment was the formation of acetic acid as a consequence of the deacetylation of the acetylated moiety of hemicellulose (Fig. 15). Fig. 15 also shows that the amount of glucose was maintained at a low level during all times, indicating that the hot water treatment did not result in cellulose hydrolysis.

The importance on xylose recovery of applying the hot water treatment after the 70% ethanol pre-treatment was further demonstrated in the 40 l batch scale digestor. No xylose was detected in the cellulose pulp produced after the 70% ethanol and hot water treatment whereas xylose levels up to 7% of DM loaded (70% of total xylose) was measured in the cellulose pulp produced by the 70% ethanol treatment.

Example 2

Biorefining of Wheat Straw

Table 5 shows the mass composition of untreated wheat straw and the composition of the hydrolysates and pulp produced during ethanol-water pre-

treatment of the same wheat straw. The pre-treatment was applied as described above for the ethanol-water pre-treatment of the *Salix* chips in the 40 l batch digestor.

As seen in Table 5, only 27% of the initial dry matter was removed during sequential extraction with 70% ethanol and hot water. Therefore, less lignin was recovered in the ethanol solvent than when *Salix* chips were treated the same way. Also, a higher proportion of lignin was found in the wheat straw pulp. This may reflect the different type of lignin in wheat straw. As for the *Salix* pre-treatment, the pre-treatment of wheat straw with ethanol and water resulted in the recovery of all available glucose in the pulp.

Table 5

Scale & Component	Composition Un-Treated Wheat Straw (% DW chips)	Composition of solid and liquid stream after chip pre-treatment (% of total DW In)			Product Recovery (% of total component in untreated chips)		
		Hydrolysate			Hydrolysate		
		Ethanol	Water	Pulp	Ethanol	Water	Pulp
40 l	**DM**	**19**	**8**	**72**			
Lignin	27	6	1	14	22	4	52
Glucan	37	nd	<1	37	nd	0.3	100
Xylan	19	nd	<1	3	nd	1	17

When the pulp was submitted to enzymatic hydrolysis as described earlier for the *Salix* ethanol-water extracted pulp (cellulose loading ratio of 5 and cellulase loading of 80 fpu per gram), the cellulose in the wheat pulp was completely hydrolyzed (100%) within 6 days of reaction agitated using rollers.

Example 3

Micropropagation of *Salix* spp.

The technique of micropropagation was used to rapidly develop large numbers of clonal *Salix* spp. plantlets at low cost. Planting stakes of *S. viminalis* and *S. schwerinii* 'Kinuyanagi' were produced via micropropagation as follows.

To establish shoot cultures *in vitro*, stems from one-year-old *Salix* species grown in the field were collected in winter and cut into 25 to 35 cm long cuttings. The cuttings were washed in water, sterilized in 15% commercial bleach for 15 min and rinsed three times in water. The cuttings were then placed in a beaker containing

water. Four to six weeks later, new shoots (5 to 10 cm long) were produced from the cuttings. The new shoots were collected and sterilized in 15% bleach after leaves were removed. The sterilized shoots were rinsed three times in sterile water in a sterile tissue culture hood. The shoots were then cut into 0.5 to 1 cm long micro-cuttings containing two nodes each. The micro-cuttings were placed into MS (Murashige and Skoog) medium (Sigma, St Louis MO; Murashige and Skoog, *Physiol. Plant.* 15:473-497, 1962) or McCown Woody Plant medium (Duchefa, Haarlem, Netherlands; Lloyd and McCown, *Proc. Int. Plant Prop. Soc.* 30:421-427, 1981) supplemented with 0.1 to 1.0 mg/l BA (benzyladenine) and 0.1 to 1.0 g/l activated charcoal, and incubated in a plant growth room at 24°C with a 16-hour photoperiod. Four weeks later, a shoot (2-4 cm long) and several roots were produced from each micro-cutting to form a plantlet. The plantlets were cut again into micro-cuttings and cultured in McCown Woody Plant medium to increase the number of plantlets. This process may be repeated every four weeks. Plantlets were transplanted into potting mix in 25 ml cells.

Following transfer in soil, plantlets were kept in growth chamber containing 100% humidity for one week before being exposed to normal humidity conditions. Four weeks after transfer into potting mix, plantlets of 10-15 cm high were cut into 3-5 cm segments (containing a least 2 nodes) that were re-planted in potting mix in 25 ml cells to further increase the number of plantlets. Alternatively, the plantlets can be transplanted into the field seven weeks after initial transfer from culture media to potting mix, or after three weeks when the plantlet was produced from another plantlet in potting mix.

The composition of the McCown Woody Plant medium used in these studies was as follows:

Micro elements	
$CuSO_4.5H_20$	0.2 mg/l
FeNaEDTA	36.70 mg/l
H_3BO_3	6.20 mg/l
$MnSO_4.H_2O$	22.30 mg/l
$Na_2MoO_4.2H_2O$	0.25 mg/l
$ZnSO_4.7H_2O$	8.60 mg/l

Macro elements	
$CaCl_2$	72.50 mg/l
$Ca(NO_3)_2$	386.80 mg/l
KH_2PO_4	170.00 mg/l
K_2SO_4	990.00 mg/l
$MgSO_4$	180.54 mg/l
NH_4NO_3	400.00 mg/l

Vitamins	
Glycine	2.00 mg/l
myo-Inositol	100.00 mg/l
Nicotinic acid	0.50 mg/l
Pyridoxine HCl	0.50 mg/l
Thiamine HCl	1.00 mg/l

The composition of Murashige and Skoog medium used in these studies was as follows:

Ammonium nitrate	1,650 mg/l
Boric acid	6.2 mg/l
Calcium chloride	440 mg/l
Cobalt chloride	0.025 mg/l
Magnesium sulfate	370 mg/l
Cupric sulfate	0.025 mg/l
Potassium phosphate	170 mg/l
Ferrous sulfate	27.8 mg/l
Potassium nitrate	1,099 mg/l
Manganese sulfate	22.3 mg/l
Potassium iodine	0.83 mg/l
Sodium molybdate	0.25 mg/l
Zinc sulfate	8.6 mg/l
$Na_2EDTA.2H_2O$	37.2 mg/l
i-Inositol	100 mg/l
Niacin	0.5 mg/l
Pyridoxine.HCl	0.5 mg/l
Thiamine.HCl	0.1 mg/l
IAA	1 mg/l
Kinetin	0.04 mg/l
Glycine	2.0 mg/l
Edamine	1.0 g/l

Example 4

Salix spp field trial

Site trials were performed to determine the *Salix* species and growth regimes suitable for sites within the Lake Taupo catchments in New Zealand. *Salix viminalis* (a male clone) and *Salix schwerinii* 'Kinuyanagi' (an infertile male clone) were selected as preferred species. These cultivars were initially selected on the basis that commercial nurseries considered them to be high yielding and resistant to insect pests such as sawfly. The trials were established using 20 to 33 cm dormant stem cuttings planted at a stocking of ten to twelve thousand stem per hectare. Parameters that were evaluated for the optimum biomass production included planting density, stake length, soil preparation methods, fertilization regime, insect and weed management, and harvesting method.

The trial consisted of 32 plots (16 per species), testing site preparation of ripping compared with no ripping and cutting length. Cutting lengths of 20, 25 and 33 cm were tested. Weed control using Gardoprim® (Orion Crop Protection Ltd, Auckland, New Zealand) was applied to all plots. No fertilizer was applied due to the need to benchmark soil and foliage analysis in the first year. The designated measurement plot of forty trees was assessed in May 2006. Height of the dominant shoot, number of leaders greater than 50 cm from each cutting and the number of live cuttings converted to a stocking (stems/ha) was recorded (Table 6).

As seen in Table 6, there were no significant differences in height and number of leader stems between *Salix viminalis* and *Salix schwerinii* 'Kinuyanagi' one year after planting. Both species were well established on this specific site (light pumice based Taupo soil) independent of the site preparation method. It should be noted that ripping would be required if cuttings were planted mechanically. There was an increase in productivity with 25 cm cutting as compared with the 20 cm cutting but further increases in cutting length (from 25 to 33) had no impact on the stocking rates and mean height of the dominant shoot.

Table 6: Site trial measurement after one year

Variety	Mean Height (m)	Mean Number of Leaders	Stocking (stems/ha)
Species			
schwerinii	1.21	2.62	8,995
viminalis	1.18	2.78	9,403
Site preparation			
Ripped	1.30	2.84	8,909
Unripped	1.11	2.81	10,006
Cutting length			
20	1.14	2.51	8,856
25	1.23	2.85	9,876
33	1.25	3.11	9,641

The basic wood density, moisture content of one year old Salix *schwerinii* 'Kinuyanagi' and *Salix viminalis* were calculated (Table 7). Samples were collected for biomass analysis from four plants per plots where medium survival was recorded (2 plots per species).

Table 7: Biomass Analysis

Species	Wood density (kg/m^3)	Moisture (%)
S schwerinii	390	56.0
S. viminalis	384	55.5

While the present invention has been described with reference to the specific embodiments thereof, it should be understood by those skilled in the art that various changes may be made and equivalents may be substituted without departing from the true spirit and scope of the invention. In addition, many modifications may be made to adapt a particular situation, material, composition of matter, method, method step or steps, for use in practicing the present invention. All such modifications are intended to be within the scope of the claims appended hereto.

All of the publications, patent applications and patents cited in this application are herein incorporated by reference in their entirety to the same extent as if each individual publication, patent application or patent was specifically and individually indicated to be incorporated by reference in its entirety.

2007248991 05 May 2010

THE CLAIMS DEFINING THE INVENTION ARE AS FOLLOWS:

1. An integrated method for the treatment of plant material, comprising:

(a) in a first stage extraction process, contacting the plant material with an aqueous ethanol solution at a first elevated temperature and at a first elevated pressure for a period of time sufficient to produce treated plant material solids and a liquid mixture comprising ethanol, ethanol-soluble lignin and water;

(b) separating the treated plant material solids from the liquid mixture;

(c) recovering the ethanol-soluble lignin front the liquid mixture withdrawn from the first stage extraction process;

(d) in a second stage extraction process, contacting the treated plant material solids separated from the first stage extraction process with water at a second elevated temperature and at a second elevated pressure for a period of time sufficient to solubilize hemicellulose sugars from the treated plant material and produce an aqueous product stream containing water soluble sugars and a resulting plant pulp material; and

(e) separating the aqueous product stream containing water soluble sugars from the resulting plant pulp material.

2. The method of claim 1, additionally recovering water-soluble sugars, acetic acid and/or furfural from the aqueous product stream.

2007248991 05 May 2010

3. The method of claim 1, wherein the plant material is a lignocellulosic material selected from the group consisting of: woody or herbaceous materials, agricultural or forestry residues, and dedicated energy crops.

4. The method of claim 1, wherein the plant material is selected from the group consisting of: Salix, Poplar, Eucalyptus, switch grass, miscanthus, sugar cane bagasse, soybean stover, corn stover, rice straw, barley straw, wheat straw, corn fiber, wood fiber, and combinations thereof.

5. The method of claim 1, wherein the plant material is from a plant selected from the group consisting of: Salix species and wheat.

6. The method of claim 1, wherein the aqueous ethanol solution comprises 50% to 80% ethanol.

7. The method of claim 1, wherein the first elevated temperature is between 170.degree. C. and 210.degree. C. and the first elevated pressure is between 19-30 barg.

8. The method of claim 1, wherein step (a) is carried out substantially in the absence of an acid catalyst.

9. The method of claim 1, wherein the second elevated temperature is between 160.degree. C. and 220.degree. C. and the second elevated pressure is between 12-25 barg.

2007248991 05 May 2010

10. The method of claim 1, further comprising contacting the resulting plant pulp material from step (d) with (i) an aqueous solution comprising cellulase, .beta.-glucosidase and temperature-tolerant yeast, (ii) yeast growth media, and (iii) buffer for a period time sufficient to hydrolyze cellulose present in the plant pulp material to glucose.

11. The method of claim 10, further comprising fermenting the glucose to produce ethanol.

12. The method of claim 1, additionally comprising hydrolyzing cellulose present in the resulting plant pulp material to produce a glucose-rich product.

13. The method of claim 1, additionally comprising recovering xylose from the aqueous product stream containing water soluble sugars.

14. The method of claim 12, additionally comprising: fermenting the glucose-rich product to produce an ethanol-containing fermentation product; and recovering ethanol from the ethanol-containing fermentation product.

15. The method of claim 14, wherein the recovered ethanol is a mixture of hydrous and anhydrous ethanol.

16. The method of claim 15, wherein a portion of produced anhydrous ethanol is re-utilized to produce the aqueous solution of up to 70% ethanol in water.

2007248991 05 May 2010

17. The method of claim 1, additionally comprising drying the plant material prior to contacting it with the aqueous ethanol solution.

18. The method of claim 1, wherein the first stage extraction process involves contacting the plant material with a counter-current flow of the aqueous ethanol solution.

19. The method of claim 1, wherein the first stage extraction process involves contacting the plant material with an aqueous ethanol solution in a screw contactor digester.

20. The method of claim 1, additionally comprising contacting the resulting plant pulp material with an aqueous solution promoting hydrolysis of cellulose present in the resulting plant pulp material to glucose in a simultaneous saccharification and fermentation process.

21. The method of claim 1, wherein the first stage extraction process involves contacting the plant material with a co-current flow of the aqueous ethanol solution.

22. The method of claim 1, wherein the first stage extraction process involves contacting a continuous flow of the plant material with a co-current or counter-current continuous flow of the aqueous ethanol solution.

23. The method of claim 1, wherein the second stage extraction process involves contacting the treated plant material solids with a counter-current flow of water.

2007248991 05 May 2010

24. The method of claim 1, wherein the second stage extraction process involves contacting the treated plant material solids with a co-current flow of water.

25. The method of claim 20, wherein the material remaining following the saccharification and fermentation process is filtered and retained solids are recovered for use as feed.

26. The method of claim 20, wherein the material remaining following the saccharification and fermentation process is filtered and the filtrate is concentrated to produce hydrous and/or anhydrous ethanol.

27. An integrated process for treatment of plant biomass comprising:

(a) in a first stage extraction, contacting the plant biomass with an aqueous ethanol solution at a first elevated temperature and at a first elevated pressure for a period of time sufficient to produce a first stage liquid effluent comprising ethanol-soluble lignin and a first stage plant pulp solid material having a reduced lignin content;

(b) separating the first stage plant pulp solid material from the first stage liquid effluent and recovering the ethanol soluble lignin from the first stage liquid effluent;

(c) contacting the first stage plant pulp solid material with water at a second elevated temperature and at a second elevated pressure in a second stage extraction; and

2007248991 05 May 2010

(d) separating a second stage plant pulp solid material remaining following the second stage extraction from a second stage aqueous liquid effluent; and

(e) recovering water-soluble sugars, acetic acid and/or furfural from the second stage liquid effluent.

28. The method of claim 27, wherein the plant material is a lignocellulosic material selected from the group consisting of: woody or herbaceous materials, agricultural or forestry residues, and dedicated energy crops.

29. The method of claim 27, wherein step (a) is carried out substantially in the absence of an acid catalyst.

30. The method of claim 27, additionally comprising hydrolyzing cellulose present in the second stave plant pulp solid material to produce a glucose-rich product.

31. The method of claim 29, additionally comprising fermenting the glucose-rich product to produce an ethanol-containing fermentation product.

32. The method of claim 30, additionally comprising filtering the fermentation product and recovering the retained solids.

33. The method of claim 30, additionally comprising recovering hydrous and/or anhydrous ethanol from the ethanol-containing fermentation product.

2007248991 05 May 2010

34. The method of claim 27, additionally comprising recovering xylose from the second stage liquid effluent.

Dated this 4 day of May 2010

Biojoule Ltd.
Patent Attorneys for the Applicant
PETER MAXWELL AND ASSOCIATES

FIG. 1

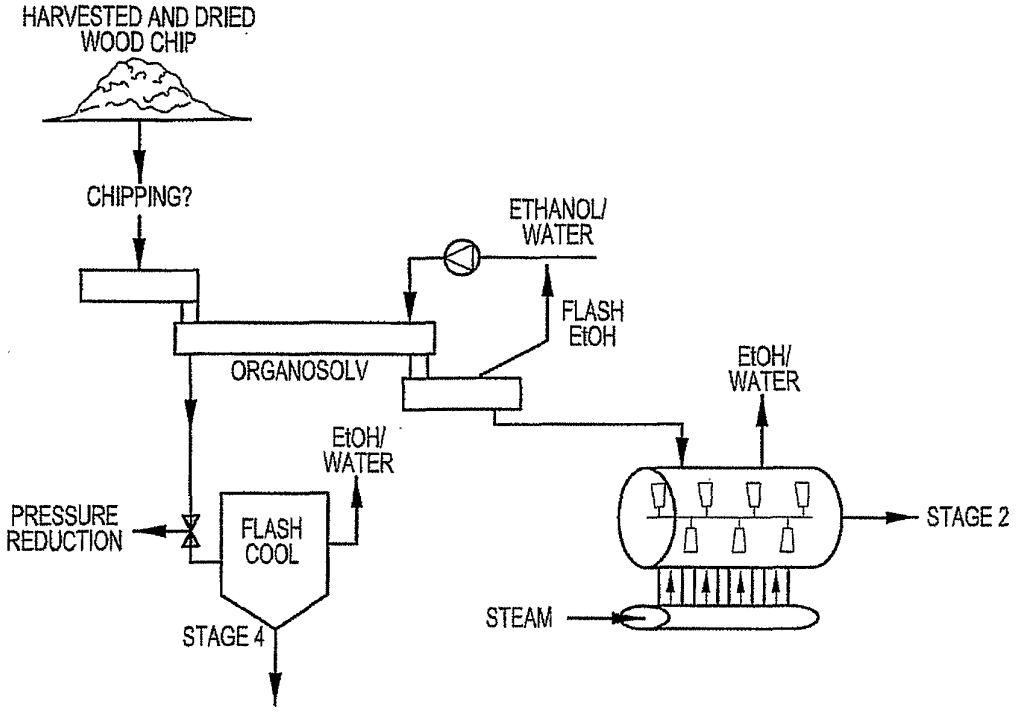
HARVESTED AND DRIED WOOD CHIP
CHIPPING?
ETHANOL/ WATER
FLASH EtOH
ORGANOSOLV
EtOH/ WATER
EtOH/ WATER
PRESSURE REDUCTION
FLASH COOL
STAGE 2
STEAM
STAGE 4

FIG. 2

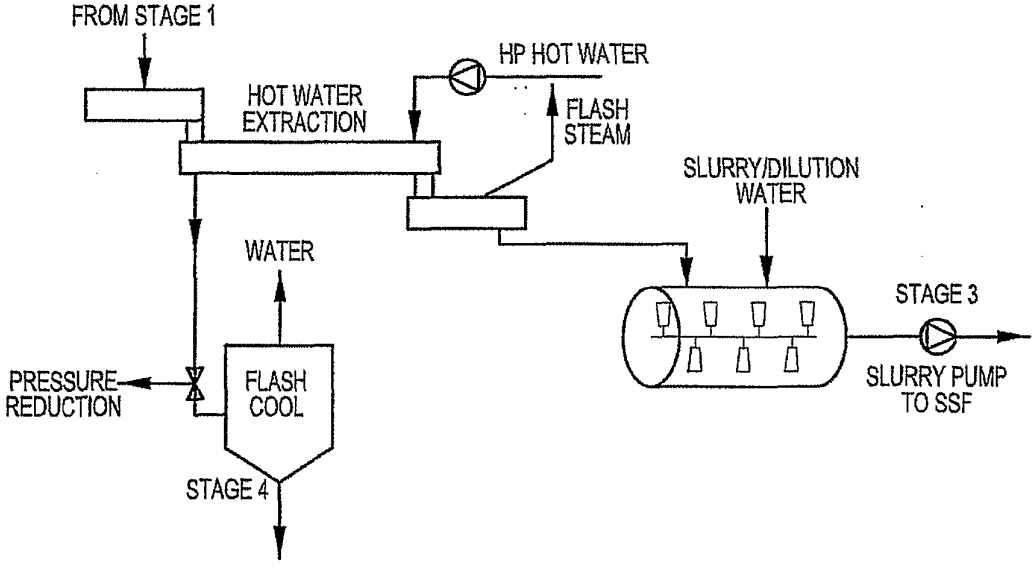
FROM STAGE 1
HP HOT WATER
HOT WATER EXTRACTION
FLASH STEAM
SLURRY/DILUTION WATER
WATER
STAGE 3
PRESSURE REDUCTION
FLASH COOL
SLURRY PUMP TO SSF
STAGE 4

FIG. 3

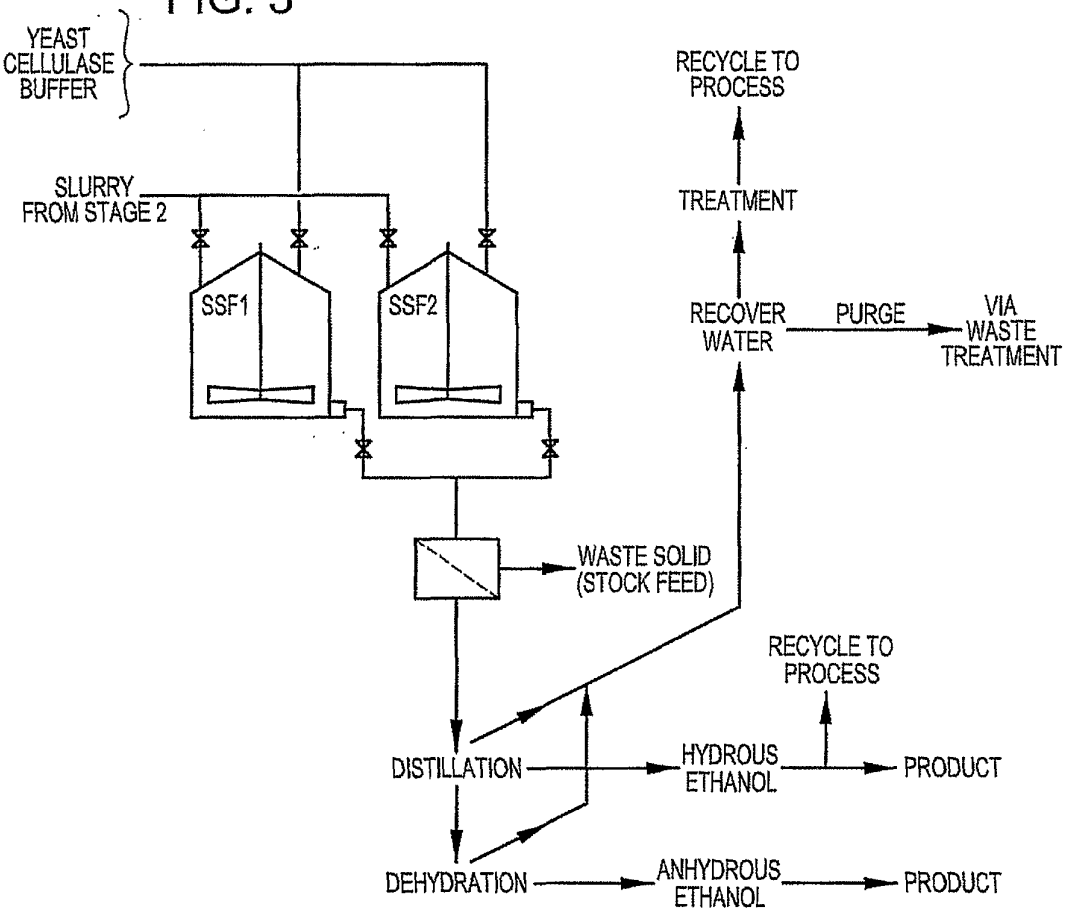
YEAST
CELLULASE
BUFFER
SLURRY
FROM STAGE 2
SSF1
SSF2
RECYCLE TO
PROCESS
TREATMENT
RECOVER
WATER
PURGE
VIA
WASTE
TREATMENT
WASTE SOLID
(STOCK FEED)
RECYCLE TO
PROCESS
DISTILLATION
HYDROUS
ETHANOL
PRODUCT
DEHYDRATION
ANHYDROUS
ETHANOL
PRODUCT

FIG. 4

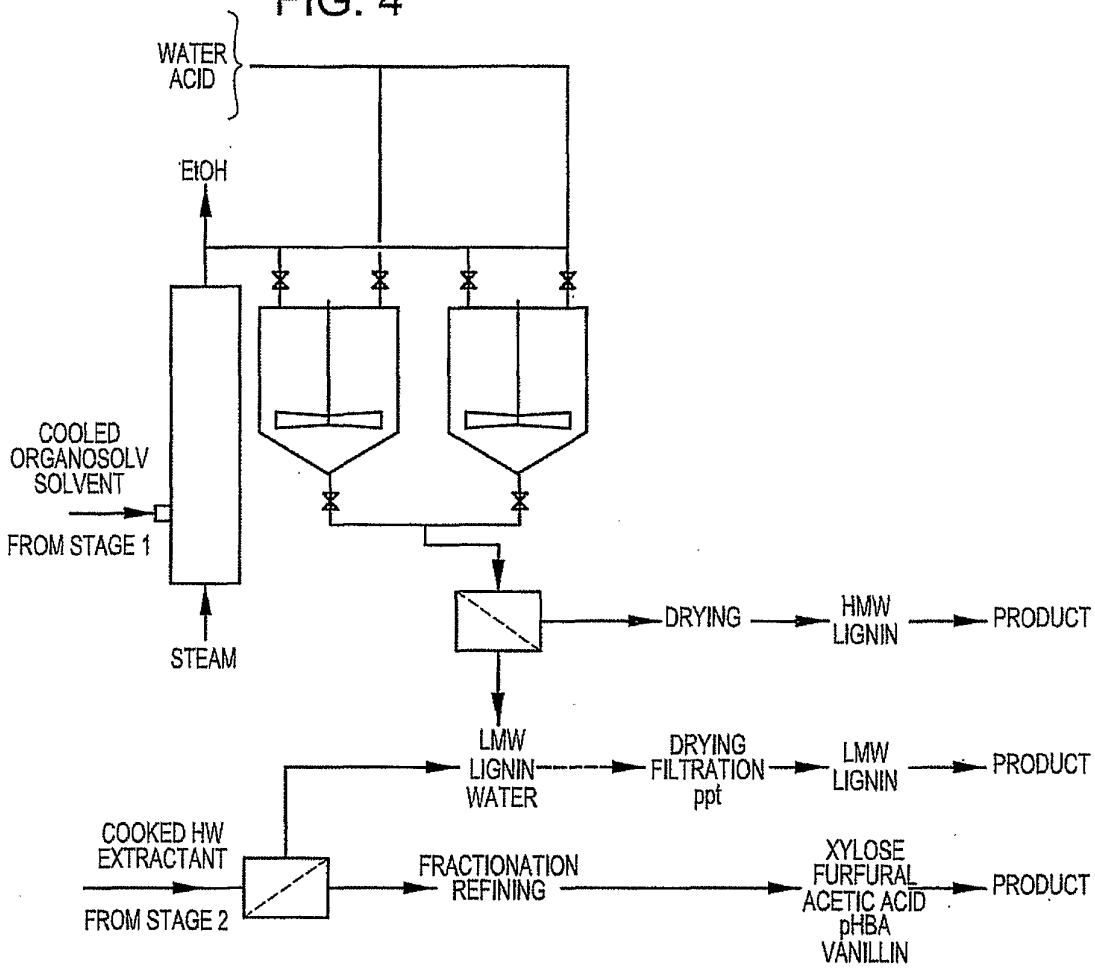
WATER
ACID
EtOH
COOLED
ORGANOSOLV
SOLVENT
FROM STAGE 1
STEAM
DRYING
HMW
LIGNIN
PRODUCT
LMW
LIGNIN
WATER
DRYING
FILTRATION
ppt
LMW
LIGNIN
PRODUCT
COOKED HW
EXTRACTANT
FROM STAGE 2
FRACTIONATION
REFINING
XYLOSE
FURFURAL
ACETIC ACID
pHBA
VANILLIN
PRODUCT

FIG. 5

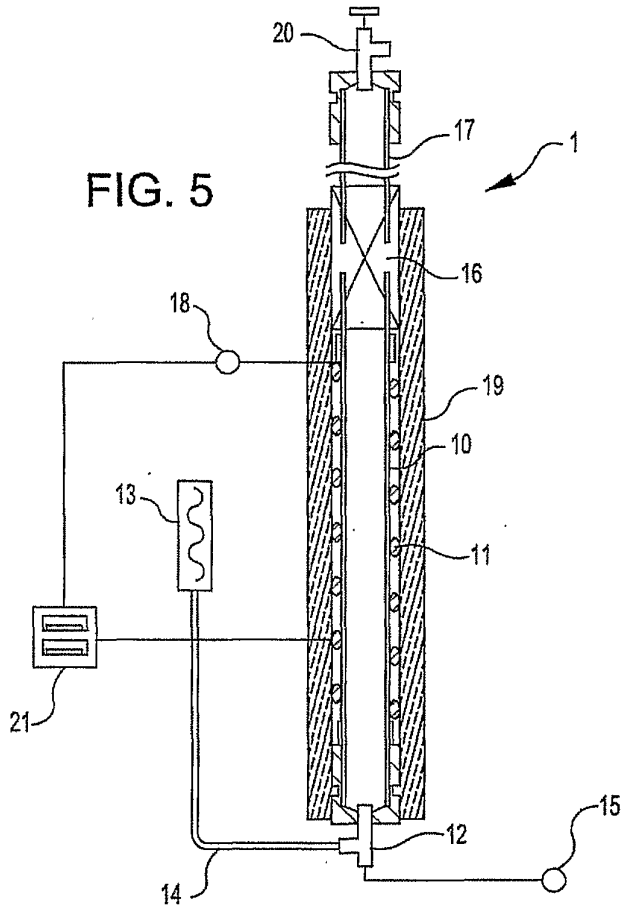

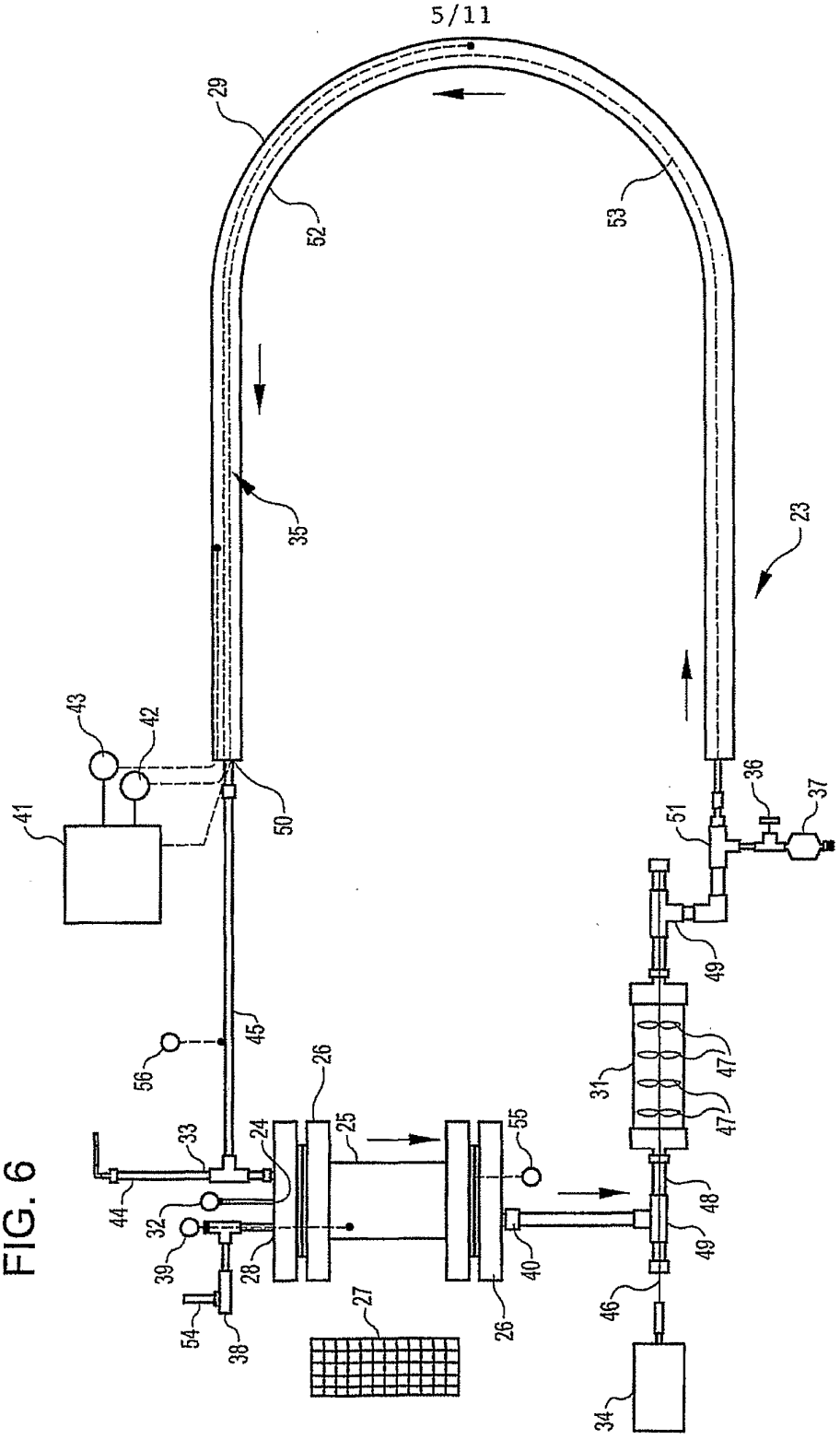
29
52
53
35
23
43
42
41
50
36
37
51
49
45
56
26
31
47
47
33
24
25
55
44
32
39
28
40
48
49
54
38
27
26
46
34

FIG. 6

FIG. 7

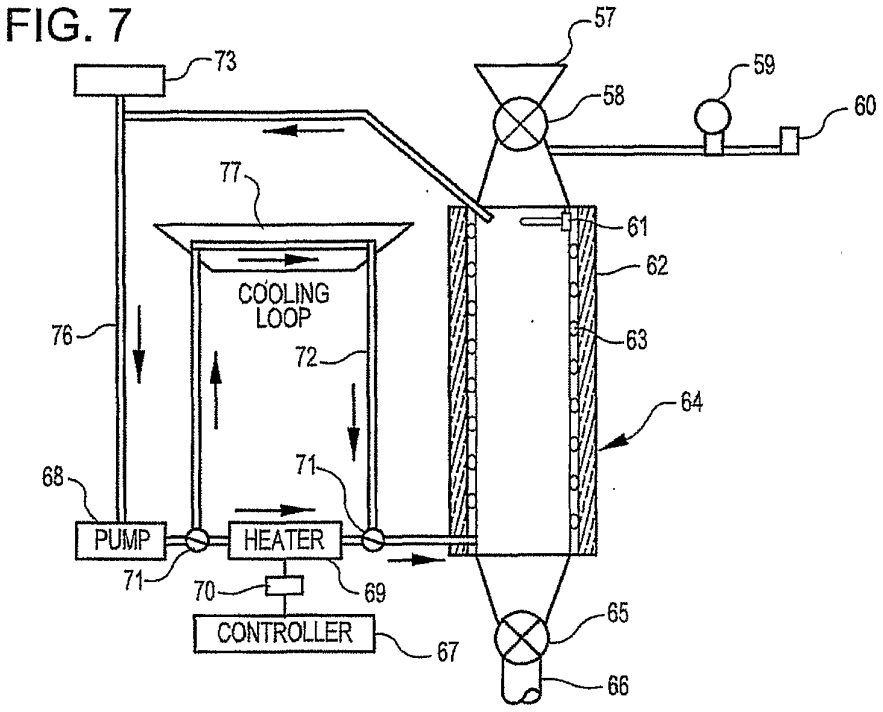
57
73
59
58
60
77
61
62
COOLING
LOOP
76
72
63
64
68
71
PUMP
HEATER
71
70
69
65
CONTROLLER
67
66

Fig. 8

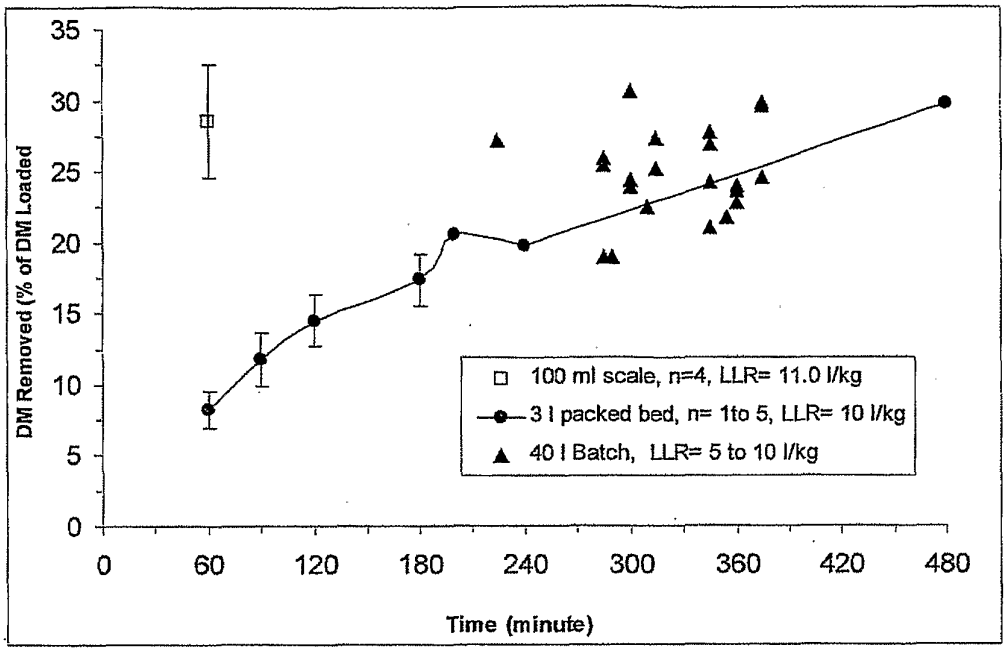
DM Removed (% of DM Loaded
35
30
25
20
15
10
5
0
0
60
120
180
240
300
360
420
480
Time (minute)
100 ml scale, n=4, LLR= 11.0 l/kg
3 l packed bed, n= 1to 5, LLR= 10 l/kg
40 l Batch, LLR= 5 to 10 l/kg

Fig. 9A

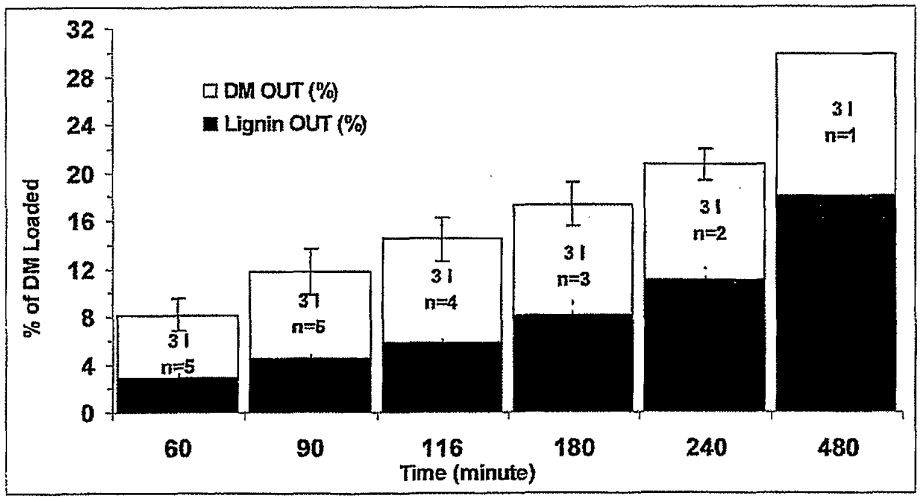
% of DM Loaded
32
28
24
20
16
12
8
4
0
DM OUT (%)
Lignin OUT (%)
3 l n=5
3 l n=6
3 l n=4
3 l n=3
3 l n=2
3 l n=1
60
90
116
180
240
480
Time (minute)

Fig. 9B

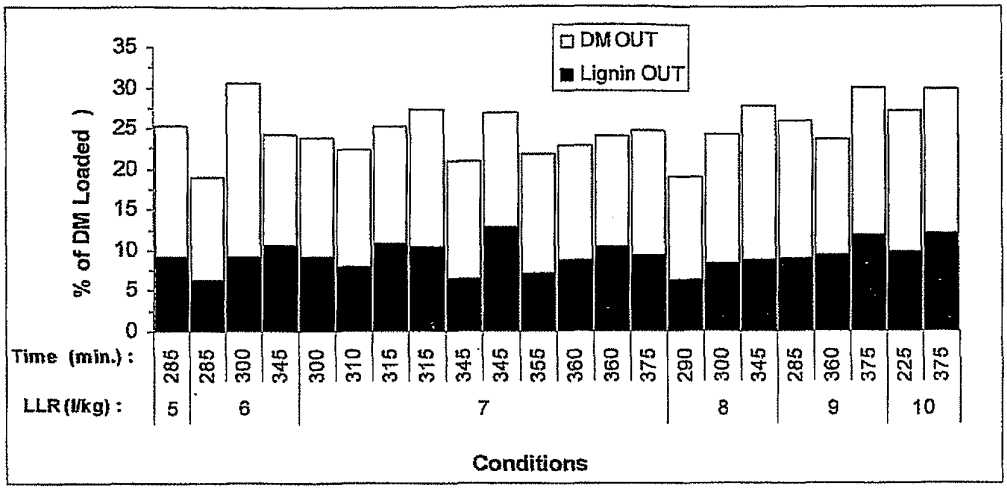
DM OUT
Lignin OUT
% of DM Loaded)
35
30
25
20
15
10
5
0
Time (min.) :
285
285
300
345
300
310
315
315
345
345
355
360
360
375
290
300
345
285
360
375
225
375
LLR (l/kg) :
5
6
7
8
9
10
Conditions

Fig. 10

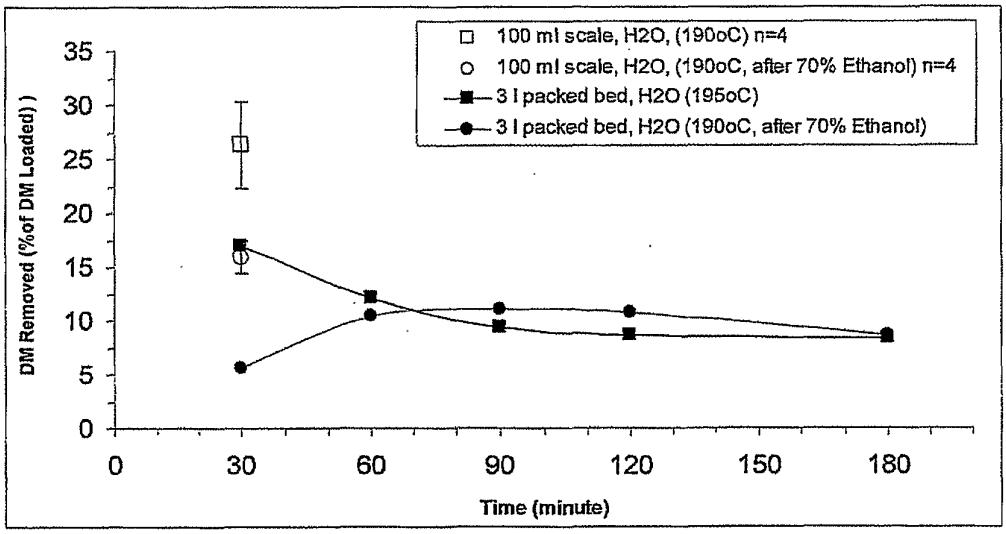
100 ml scale, H2O, (190oC) n=4
100 ml scale, H2O, (190oC, after 70% Ethanol) n=4
3 l packed bed, H2O (195oC)
3 l packed bed, H2O (190oC, after 70% Ethanol)
DM Removed (%of DM Loaded))
35
30
25
20
15
10
5
0
0
30
60
90
120
150
180
Time (minute)

Fig. 11

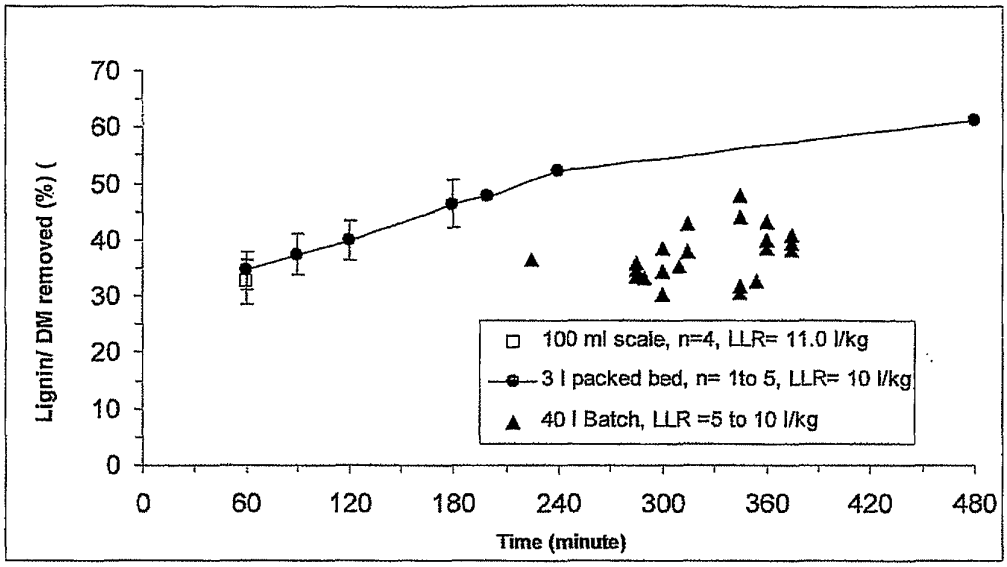
Lignin/ DM removed (%) (
70
60
50
40
30
20
10
0
0
60
120
180
240
300
360
420
480
Time (minute)
100 ml scale, n=4, LLR= 11.0 l/kg
3 l packed bed, n= 1to 5, LLR= 10 l/kg
40 l Batch, LLR =5 to 10 l/kg

Fig. 12

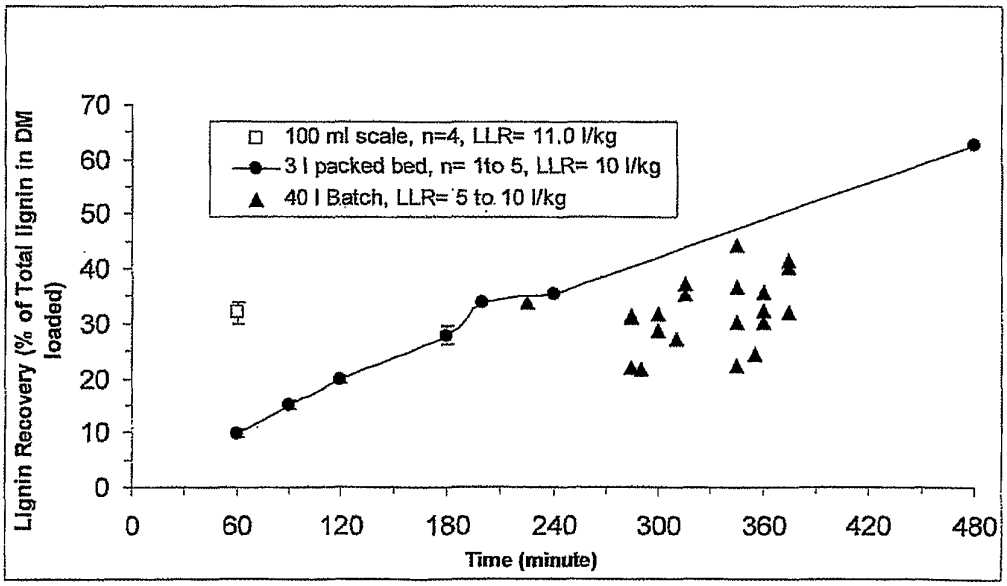
Lignin Recovery (% of Total lignin in DM loaded)
70
60
50
40
30
20
10
0
0
60
120
180
240
300
360
420
480
Time (minute)
100 ml scale, n=4, LLR= 11.0 l/kg
3 l packed bed, n= 1to 5, LLR= 10 l/kg
40 l Batch, LLR= 5 to 10 l/kg

Fig. 13

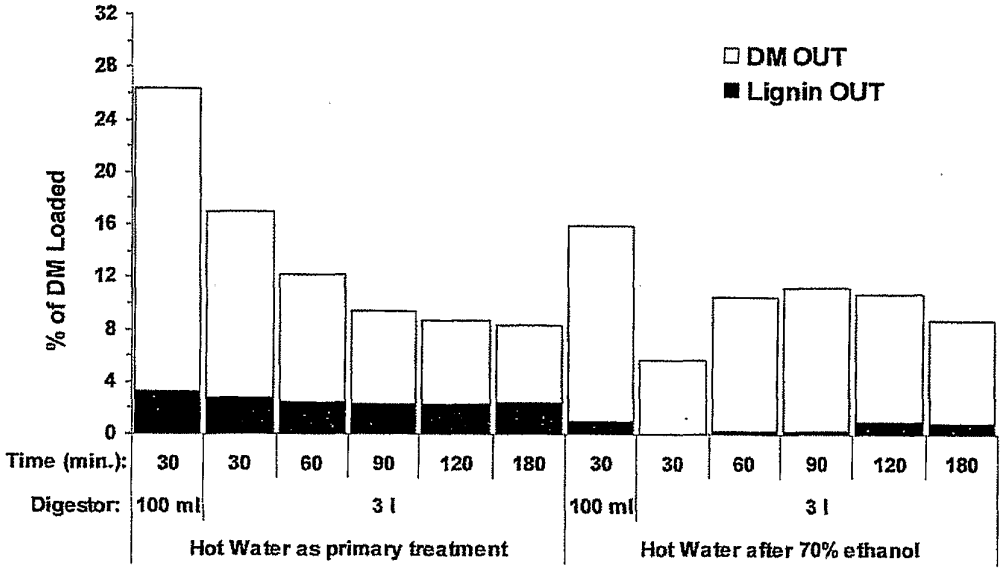
32
28
24
20
16
12
8
4
0
% of DM Loaded
□ DM OUT
■ Lignin OUT
Time (min.): 30 30 60 90 120 180 30 30 60 90 120 180
Digestor: 100 ml 3 l 100 ml 3 l
Hot Water as primary treatment
Hot Water after 70% ethanol

FIG. 14

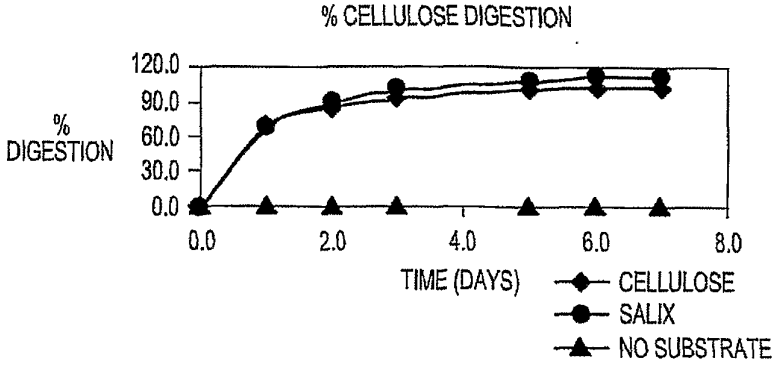
% CELLULOSE DIGESTION
%
DIGESTION
120.0
90.0
60.0
30.0
0.0
0.0
2.0
4.0
6.0
8.0
TIME (DAYS)
CELLULOSE
SALIX
NO SUBSTRATE

FIG. 15

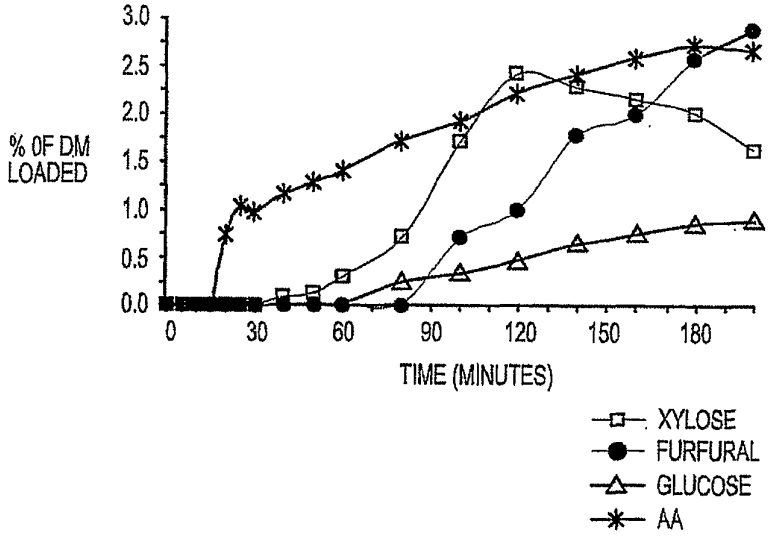
% OF DM
LOADED
3.0
2.5
2.0
1.5
1.0
0.5
0.0
0
30
60
90
120
150
180
TIME (MINUTES)
XYLOSE
FURFURAL
GLUCOSE
AA