(19) DANMARK

(10) **DK 2016 70142 A1**

(12) PATENTANSØGNING

Patent- og
Varemærkestyrelsen

(51) Int.Cl.: ***E 01 F 9/692 (2016.01)*** ***E 01 F 9/677 (2016.01)*** ***E 01 F 9/688 (2016.01)***

(21) Ansøgningsnummer: **PA 2016 70142**

(22) Indleveringsdato: **2016-03-11**

(24) Løbedag: **2016-03-11**

(41) Alm. tilgængelig: **2017-05-29**

(71) Ansøger: **Letbæk Plast A/S, Hornevej 18, 6862 Tistrup, Danmark**

(72) Opfinder: **Martin Nygaard Holm, Fredensvej 29, 6800 Varde, Danmark**

(74) Fuldmægtig: **PATENDER ApS, Birk Centerpark 40, 7400 Herning, Danmark**

(54) Benævnelse: **A traffic bollard**

(56) Fremdragne publikationer:
EP 0355440 A1
GB 2198770 A
DE 102007029101 A1
GB 875635 A

(57) Sammendrag:
A unattached traffic bollard (1; 101; 201) is disclosed comprising an elongated upright part (2; 102; 202) and a base part (3; 103; 203) arranged to be placed onto the underlying surface, wherein the upright part is 5 arranged to be releasably mounted onto the base part from the top side thereof.

Fortsættes ...

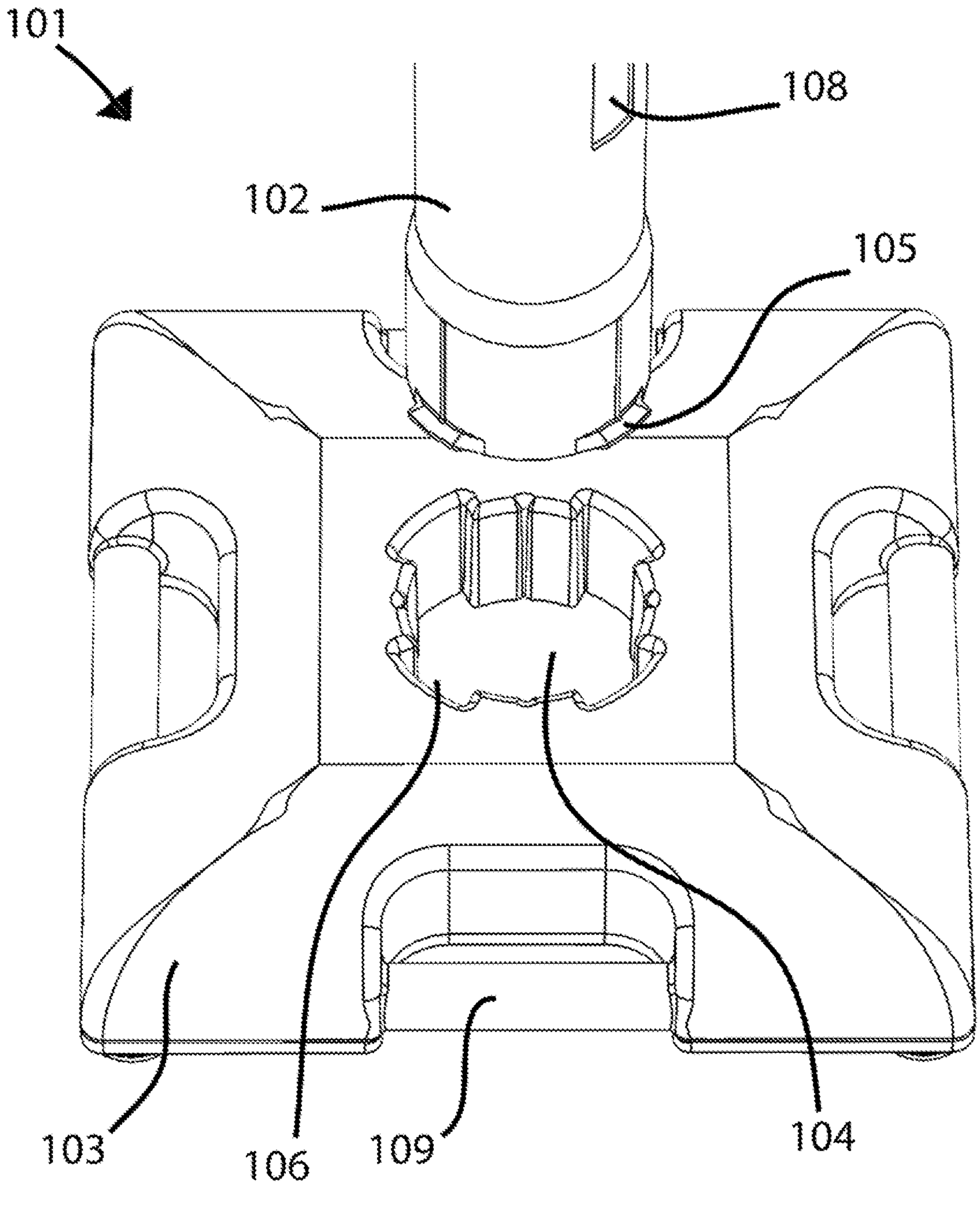

Fig. 3a

A TRAFFIC BOLLARD

The present invention relates to a traffic bollard, more particularly to an unattached lightweight traffic bollard, a cylinder part of which can be mounted in a base part from the upper side thereof.

Background of the invention

Many different types of traffic bollards are known in the art. Some are heavy, sturdy and permanently arranged, for instance along roads, around parking lots or on traffic islands in the middle of the roads. Others are light, more fragile and used temporarily, for instance in relation to roadworks, barricades around concert venues and the like.

Many such light and fragile traffic bollards basically consists of a vertical cylinder mounted in a base, which is simply placed onto the underlying surface without being attached thereto, with one or more pieces of reflective tape arranged around the cylinder.

One advantage of using such lightweight traffic bollards is that they can be placed easily and quickly, where they are to be used, and collected again, in some cases even from the bed of a slowly moving truck or van. A disadvantage, on the other hand, is that they are easily toppled or overturned due to their low weight. In order to overcome this problem, such lightweight traffic bollards are typically arranged so that the base is mounted around the cylinder from the top thereof. This means that, when needed, one or more additional bases can be mounted around the same cylinder for increasing the weight and stability of the traffic bollard. In this case, the additional base(s) simply rest(s) on top of the first and lowermost base.

This solution is simple and flexible but also entails some disadvantages. Firstly, it means that each of the bases must be lifted up to a level above the top of the cylinder

before it can be mounted around it, which can become physically hard if there are many traffic bollards, potentially with even more bases, to be mounted. Secondly, the repeated sliding of the base(s) along the cylinder when mounting (and dismounting) them inevitably leads to damaging of the reflective tapes arranged around the cylinder.

GB 875635 A, EP 0355440 A1, GB 2198770 A and DE 102007029101 A1 all disclose traffic bollards, in which an upright part can be releasably mounted onto a base part from the top side thereof.

Brief description of the invention

It is an object of the present invention to provide a traffic bollard, which overcomes the above-mentioned disadvantages related to traffic bollards known in the art.

The present invention relates to an unattached traffic bollard comprising an elongated upright part and a base part arranged to be placed onto the underlying surface, wherein the upright part is arranged to be releasably mounted onto the base part from the top side thereof, wherein the upright part is arranged to be mounted onto the base part by entering a bottom end of the upright part into an opening in the base part prior to rotating the upright part relative to the base part in order to lock the upright part and the base part to each other, wherein the opening in the base part comprises a through-going hole continuing all the way through the base part in a direction, which, when the traffic bollard is in use, is substantially vertical, and wherein the upright part and the base part are arranged so that one or more additional base parts can be mounted around the upright part without being attached thereto by arranging them with their through-going holes around the top end of the upright part and sliding them downward the upright part until they rest on the base part, to which the upright part is locked.

Arranging the traffic bollard so that the upright part can be mounted to and dismounted from the base part from the top side thereof means that the base does not need to be lifted from the ground in order to assemble the traffic bollard and that damaging of any reflective tapes or the like on the upright part is avoided or at least significantly reduced, because the base part does not need to slide along the upright part during the assembly of the traffic bollard as is the case in systems known in the art.

Furthermore, this solution provides a simple and reliable way of obtaining a locked configuration of the traffic bollard, and configuring the traffic bollard in this way ensures that several base parts can be mounted around the same upright part to increase the weight and stability of the traffic bollard as in systems known in the art.

Thus, the present invention differs from the disclosures of GB 875635 A, EP 0355440 A1, GB 2198770 A and DE 102007029101 A1, inter alia, in that several base parts can be mounted around the same upright part.

In an embodiment of the invention, the upright part and the base part are arranged so that the upright part can also be mounted to the base part from the bottom side thereof.

When appropriately arranged, this technical feature means that traffic bollards according to the present invention can be made compatible with existing traffic bollard systems known in the art and vice versa.

In an embodiment of the invention, at least the bottom end of the upright part is formed as a circular cylinder provided with two or more locking flanges protruding from the bottom end thereof in directions pointing at least partly away from the longitudinal axis of the upright part, i.e. sideward out from the upright part when the traffic bollard is in use, and the opening within the base part comprises a substantially circular through-going hole with a plurality of likewise through-going

notches arranged along the edge thereof, corresponding to the upright part with its locking flanges in such a way that the bottom end of the upright part with the locking flanges can be entered through the circular hole with the notches and rotated relatively to the base part to an orientation, in which it cannot be pulled back out of the base part again.

This is a simple and reliable way of configuring a traffic bollard system, which comprises all the above-mentioned technical features and, thus, enjoys the different advantages related thereto.

In an embodiment of the invention, at least the bottom end of the upright part is formed as an elliptical cylinder provided with a locking slit into the elliptical cylinder in one or both of its sides with the smallest radius of curvature and near the bottom end thereof, and the opening within the base part comprises a through-going hole with one or more locking flanges protruding into the through-going hole in one or two opposing sides thereof in such a way that the bottom end of the upright part can be entered into the hole and rotated relatively to the base part to an orientation, in which the locking flanges of the base part enters the locking slits of the upright part so that it cannot be pulled back out of the base part again.

This is another simple and reliable way of configuring a traffic bollard system, which comprises all the above-mentioned technical features and, thus, enjoys the different advantages related thereto.

In an embodiment of the invention, the upright part is provided with one or more reflective markers, for instance in the form of one or more reflective pieces of tape arranged around the upright part.

Using reflective tape arranged around the upper part is a simple, flexible and reliable way of obtaining the desired reflective properties of the traffic bollard. Different

legislations and different uses of the traffic bollard may require different reflective properties.

In an embodiment of the invention, the upright part is provided with one or more pairs of opposed through-going openings for letting a barrier ribbon or the like pass through the upright part.

In many cases, the traffic bollard makes part of a barrier to the public, which can be easily implemented by arranging a barrier ribbon or the like between and through a plurality of traffic bollards.

In an embodiment of the invention, the base part is provided with one or more handles arranged so that the base part can easily be lifted up from the ground.

Making it easier to handle the base part reduces the physical wear on the people working with large numbers of such traffic bollards.

In an embodiment of the invention, an internal part of the base part is produced, for instance by casting or extrusion, in a honeycomb structure.

Using a honeycomb structure enables for obtaining a physically strong configuration without increasing the weight of the base part unnecessarily.

The drawings

In the following a few exemplary embodiments of the invention are described in further detail with reference to the figures, of which

Figs. 1a-1b illustrate a traffic bollard known in the art in a disassembled and an assembled configuration, respectively,

Fig. 2 illustrates the assembling process for the traffic bollard shown in Figs. 1a-1b,

Figs. 3a-3c illustrate three steps of assembling a traffic bollard according to a first embodiment of the invention as seen obliquely from above,

Figs. 4a-4c illustrate the same three steps of assembling the traffic bollard according to the first embodiment of the invention as seen from below,

Figs. 5a-5c illustrate three steps of assembling a traffic bollard according to a second embodiment of the invention as seen obliquely from above, and

Figs. 6a-6b illustrate the last two of these three steps of assembling the traffic bollard according to the second embodiment of the invention as seen from below.

Detailed description of the invention

Figs. 1a and 1b illustrate a traffic bollard 1 known in the art in a disassembled and an assembled configuration, respectively. The main parts of the traffic bollard 1 are an upright part 2 in the form of a hollow plastic cylinder and a base part 3, which is produced, for instance by casting or extrusion, from a plastic material. The upright part 2 is provided with one or more reflective markers 7 in the form of reflective pieces of tape arranged around the upright part 2. Furthermore, the upright part 2 is provided near its top end and near its bottom end with a number of pairs of openings 8 for barrier ribbons or the like to pass through the upright part 2.

Fig. 2 illustrates the assembling process for the traffic bollard 1 shown in Figs. 1a and 1b. The base part 3 is provided with a vertically oriented through-going hole with a diameter slightly larger than the outer diameter of the upright part 2, and the

bottom end of the upright part 2 is provided with a circular outward-protruding flange, which is not able to pass through the through-going hole in the base part 3.

The assembly takes place by lifting the base part 3 from the ground, placing it with the through-going hole around the top end of the upright part 2 and sliding the base part 3 downward around the upright part 2 until the base part 3 is back on the ground. The flange at the bottom end of the upright part 2 makes sure that the upright part 2 is kept in place within the base part 3. A recess (not shown) in the downward-facing surface of the base part 3 makes room for the flange so that the base part 3 can rest stable on the ground.

Figs. 3a-3c illustrate three steps of assembling a traffic bollard 101 according to a first embodiment of the invention as seen obliquely from above. In this embodiment, at least the bottom end of the upright part 102 is formed as a circular cylinder provided with two or more locking flanges 105 protruding from the bottom end thereof. These locking flanges 105 point in directions at least partly away from the longitudinal axis of the upright part 102, i.e. sideward out from the upright part 102 when the traffic bollard 101 is in use. Furthermore, the upright part 102 can be provided with one or more pairs of openings 108 for barrier ribbons and the like, and with one or more reflective markers (not shown).

The base part 103 with four handles 109 comprises a substantially circular through-going hole 104 with a plurality of likewise through-going notches 106 arranged along the edge thereof. The positions of these notches 106 correspond to the positions of the locking flanges 105 on the upright part 102.

Beginning from the disassembled configuration illustrated in Fig. 3a, the first step of assembling the upright part 102 and the base part 103 consists in entering the bottom end of the upright part 102 with the locking flanges 105 through the circular hole 104 with the notches 105 as illustrated in Fig. 3b. The second step consists in rotating the

upright part 102 relatively to the base part 103 to an orientation, in which it cannot be pulled back out of the base part 103 again as illustrated in Fig. 3b.

Figs. 4a-4c illustrate the same three steps of assembling the traffic bollard 101 according to the first embodiment of the invention as seen from below, i.e. from the bottom side of the base part 103. In Fig. 4a, the upright part 102 has not yet been entered through the circular hole 104 with the notches 105. In Fig. 4b, the bottom end of the upright part 102 with the locking flanges 105 is placed within the circular hole 104 with the locking flanges 105 placed within the notches 106. Finally, in Fig. 4c, the upright part 102 has been rotated relatively to the base part 103 so that the locking flanges 105 are no longer aligned with the notches 106. In this position, the upright part 102 cannot any longer be pulled back out of the base part 103 again, until it has been rotated to bring the locking flanges 105 back into alignment with the notches 106.

Figs. 4a-4c further illustrates how the internal part of the base part 103 can be produced, for instance by casting or extrusion, in a honeycomb structure 110 in order to obtain a very strong and still not too heavy construction of the base part 103.

Figs. 5a-5c illustrate three steps of assembling a traffic bollard 201 according to a second embodiment of the invention as seen obliquely from above. In this embodiment, at least the bottom end of the upright part 202 is formed as an elliptical cylinder provided with a locking slit 205 into the elliptical cylinder in both of its sides with the smallest radius of curvature and near the bottom end thereof. Furthermore, the upright part 202 can be provided with one or more pairs of openings 208 for barrier ribbons and the like, and with one or more reflective markers (not shown).

The base part 203 with four handles 209 comprises a through-going hole 204 with locking flanges 206 protruding into the through-going hole 204 in two opposing sides thereof.

Beginning from the disassembled configuration illustrated in Fig. 5a, the first step of assembling the upright part 202 and the base part 203 consists in entering the bottom end of the upright part 202 through the circular hole 204 as illustrated in Fig. 5b. The second step consists in rotating the upright part 202 relatively to the base part 203 to an orientation, in which it cannot be pulled back out of the base part 203 again, because the locking flanges 206 of the base part 203 engage with the locking slits 205 of the upright part 202 as illustrated in Fig. 3b.

Figs. 6a and 6b illustrate the last two of these three steps of assembling the traffic bollard 201 according to the second embodiment of the invention as seen from below, i.e. from the bottom side of the base part 203. In Fig. 6a, the bottom end of the upright part 202 is placed within the circular hole 204 in a direction, in which it does not engage with the locking flanges 206 of the base part 203. In Fig. 6b, the upright part 202 has been rotated relatively to the base part 203 so that the locking flanges 206 of the base part 203 engage with the locking slits 205 of the upright part 202. In this position, the upright part 202 cannot any longer be pulled back out of the base part 203 again, until it has been rotated to bring the locking slits 205 out of the engagement with the locking flanges 206.

Figs. 6a and 6b further illustrates how the internal part of the base part 203 can be produced, for instance by casting or extrusion, in a honeycomb structure 210 in order to obtain a very strong and still not too heavy construction of the base part 203.

List of reference numbers

1. Traffic bollard
2. Upright part of traffic bollard
3. Base part of traffic bollard
7. Reflective marker
8. Opening for barrier ribbon

101. Traffic bollard
102. Upright part of traffic bollard
103. Base part of traffic bollard
104. Through-going hole in base part
105. Locking flange
106. Through-going notches in base part
108. Opening for barrier ribbon
109. Handle
110. Honeycomb structure

201. Traffic bollard
202. Upright part of traffic bollard
203. Base part of traffic bollard
204. Through-going hole in base part
205. Locking slit
206. Locking flange
208. Opening for barrier ribbon
209. Handle
210. Honeycomb structure

Patentkrav

1. En ikke-fastgjort trafikpullert (1; 101; 201) omfattende en aflang opretstående del (2; 102; 202) og en basedel (3; 103; 203), der er indrettet til at anbringes på den underliggende overflade,

hvor den opretstående del (2; 102; 202) er indrettet til at monteres udløseligt på basedelen (3; 103; 203) fra dennes overside,

hvor den opretstående del (2; 102; 202) er indrettet til at monteres på basedelen (3; 103; 203) ved at indføre en nederste ende af den opretstående del (2; 102; 202) i en åbning i basedelen (3; 103; 203) forud for rotation af den opretstående del (2; 102; 202) i forhold til basedelen (3; 103; 203) for at låse den opretstående del (2; 102; 202) og basedelen (3; 103; 203) til hinanden,

hvor åbningen i basedelen (3; 103; 203) omfatter et gennemgående hul (104; 204), der fortsætter hele vejen igennem basedelen (3; 103; 203) i en retning, der, når trafikpullerten (1; 101; 201) er i brug, er i det væsentlige lodret,

kendetegnet ved, at

den opretstående del (2; 102; 202) og basedelen (3; 103; 203) er indrettet således, at en eller flere yderligere basedele (3; 103; 203) kan monteres omkring den opretstående del (2; 102; 202) uden at være fastgjort dertil ved at anbringe dem med deres gennemgående huller omkring den øverste ende af den opretstående del (2; 102; 202) og lade dem glide ned omkring den opretstående del (2; 102; 202), indtil de hviler på den basedel (3; 103; 203), hvortil den opretstående del (2; 102; 202) er låst.

2. Trafikpullert (1; 101; 201) ifølge krav 1, hvor den opretstående del (2; 102; 202) og basedelen (3; 103; 203) er indrettet således, at den opretstående del (2; 102; 202) også kan monteres på basedelen (3; 103; 203) fra dennes underside.

3. Trafikpullert (101) ifølge krav 1 eller 2, hvor mindst den nederste ende af den opretstående del (102) er udformet som en cirkulær cylinder forsynet med to eller flere låseflanger (105), der rager ud fra den nederste ende deraf i retninger, der peger i det mindste delvist væk fra den langsgående akse af den opretstående del (102), dvs. sideværts ud fra den opretstående del (102), når trafikpullerten (101) er i brug, og

hvor åbningen i basedelen (103) omfatter et i det væsentlige cirkulært gennemgående hul (104) med en flerhed af ligeledes gennemgående indhak (106), der er anbragt langs kanten deraf, svarende til den opretstående del (102) med dens låseflanger (105) på en sådan måde, at den nederste ende af den opretstående del (102) med låseflangerne kan indføres gennem det cirkulære hul (104) med indhakkene (106) og roteres i forhold til basedelen (103) til en position, i hvilken den ikke kan trækkes tilbage ud af basedelen igen.

4. Trafikpullert (201) ifølge krav 1 eller 2, hvor mindst den nederste ende af den opretstående del (202) er udformet som en elliptisk cylinder forsynet med en låseslids (205) i den elliptiske cylinder i en eller begge af dennes sider med den mindste krumningsradius og nær den nederste ende deraf, og

hvor åbningen i basedelen (203) omfatter et gennemgående hul (204) med en eller flere låseflanger (206), der rager ind i det gennemgående hul (204) på en eller to modstående sider deraf på en sådan måde, at den nederste ende af den opretstående del (202) kan indføres i hullet (204) og roteres i forhold til basedelen (203) til en position, i hvilken låseflangerne (206) i basedelen (203) kommer ind i låseslidserne (205) i den opretstående del (202), så denne ikke kan trækkes tilbage ud af basedelen (203) igen.

5. Trafikpullert (1; 101; 201) ifølge et hvilket som helst af de foregående krav, hvor den opretstående del (2; 102; 202) er forsynet med en eller flere reflekterende markører (7), for eksempel i form af et eller flere reflekterende stykker tape anbragt omkring opretstående del (2; 102; 202).

6. Trafikpullert (1; 101; 201) ifølge et hvilket som helst af de foregående krav, hvor den opretstående del (2; 102; 202) er forsynet med et eller flere par af modstående gennemgående åbninger (8; 108; 208) for at lade et afspærringsbånd eller lignende kunne passere gennem den opretstående del (2; 102; 202).

7. Trafikpullert (1; 101; 201) ifølge et hvilket som helst af de foregående krav, hvor basedelen (3; 103; 203) er forsynet med et eller flere håndtag (109; 209), der er anbragt således, at basisdelen let kan løftes op fra jorden.

8. Trafikpullert (1; 101; 201) ifølge et hvilket som helst af de foregående krav, hvor en indre del af basedelen (3; 103; 203) er fremstillet i en bikagestruktur (110; 210), for eksempel ved støbning eller ekstrudering.

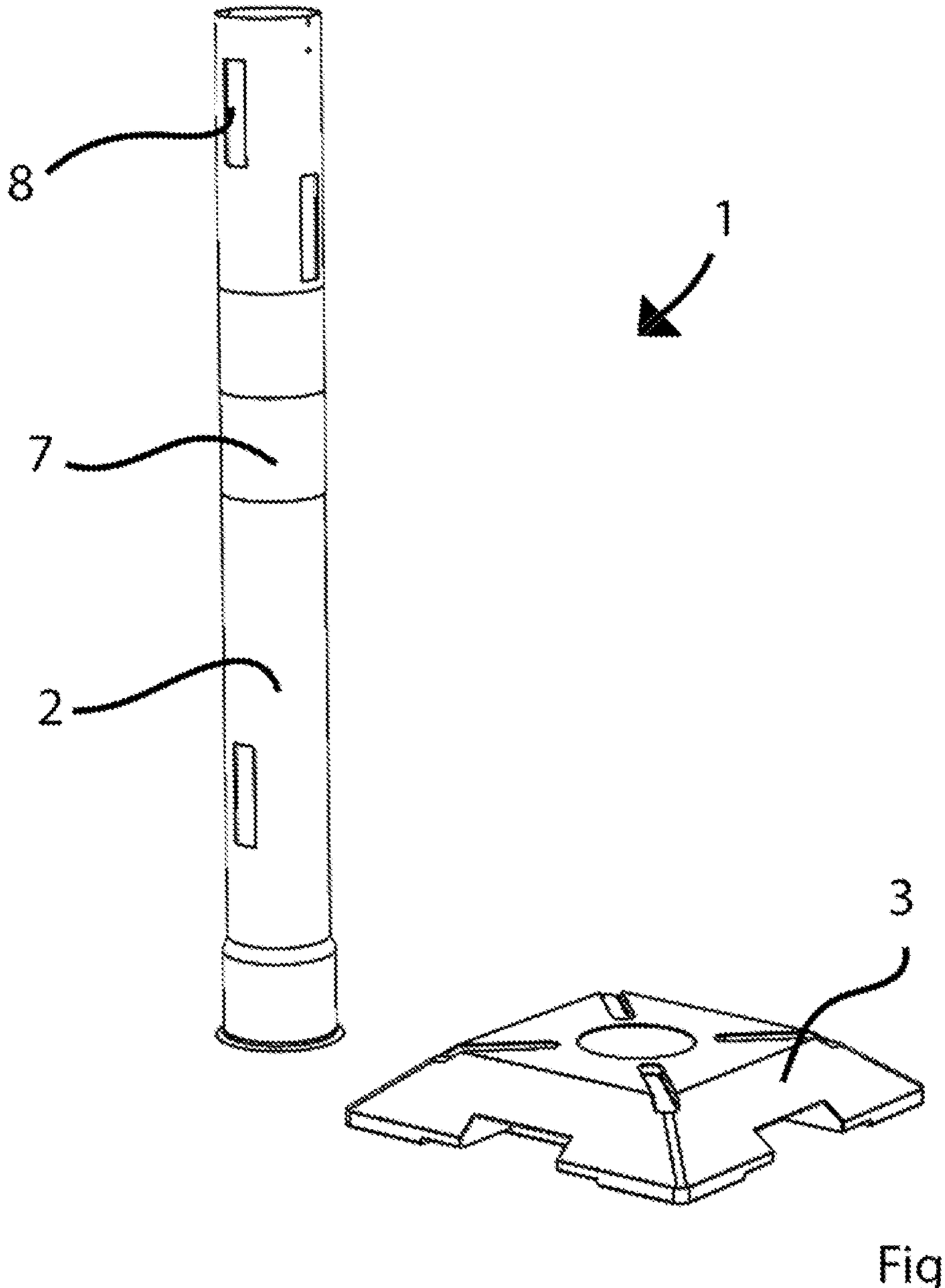

Fig. 1a

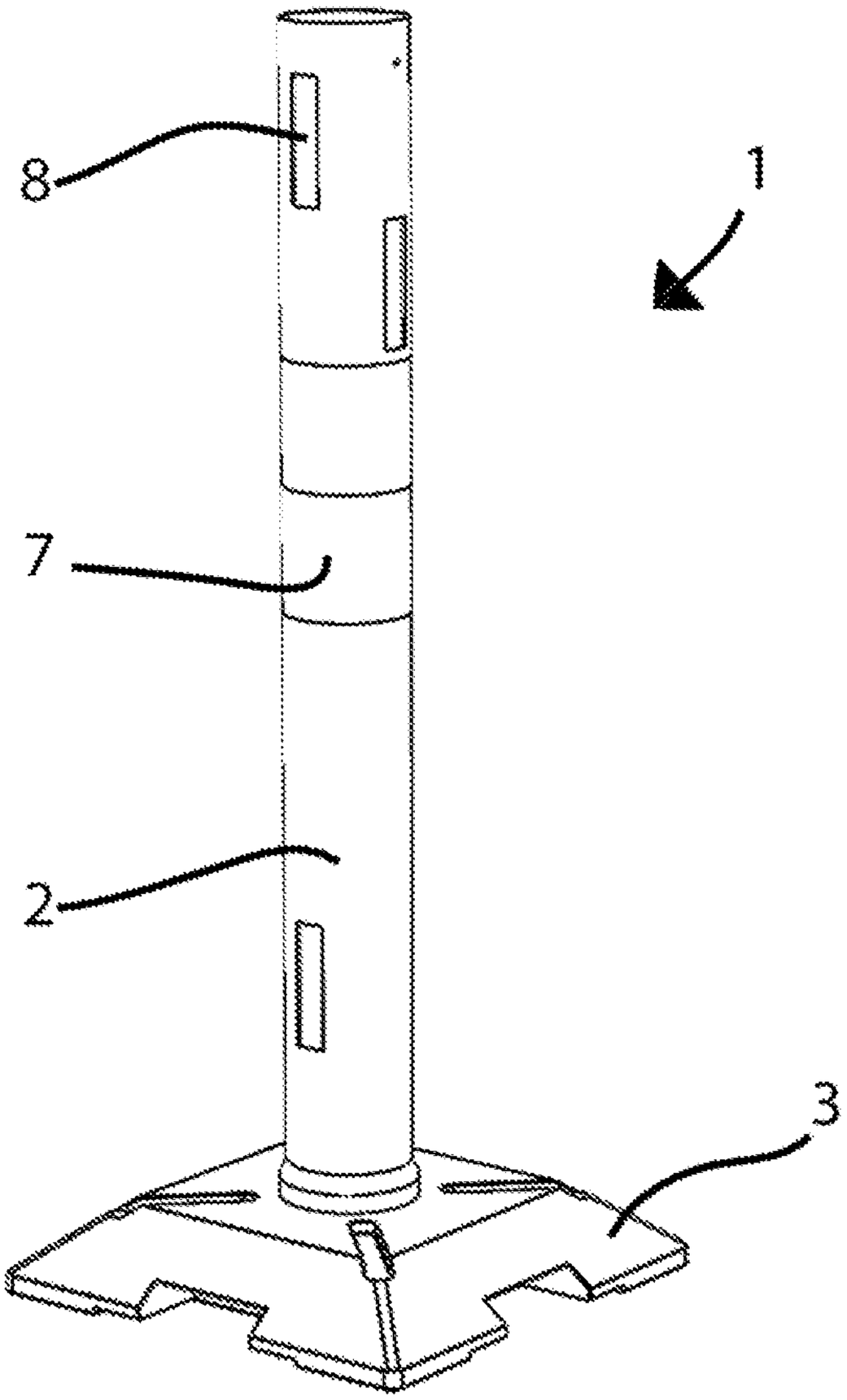

Fig. 1b

DK 2016 70142 A1

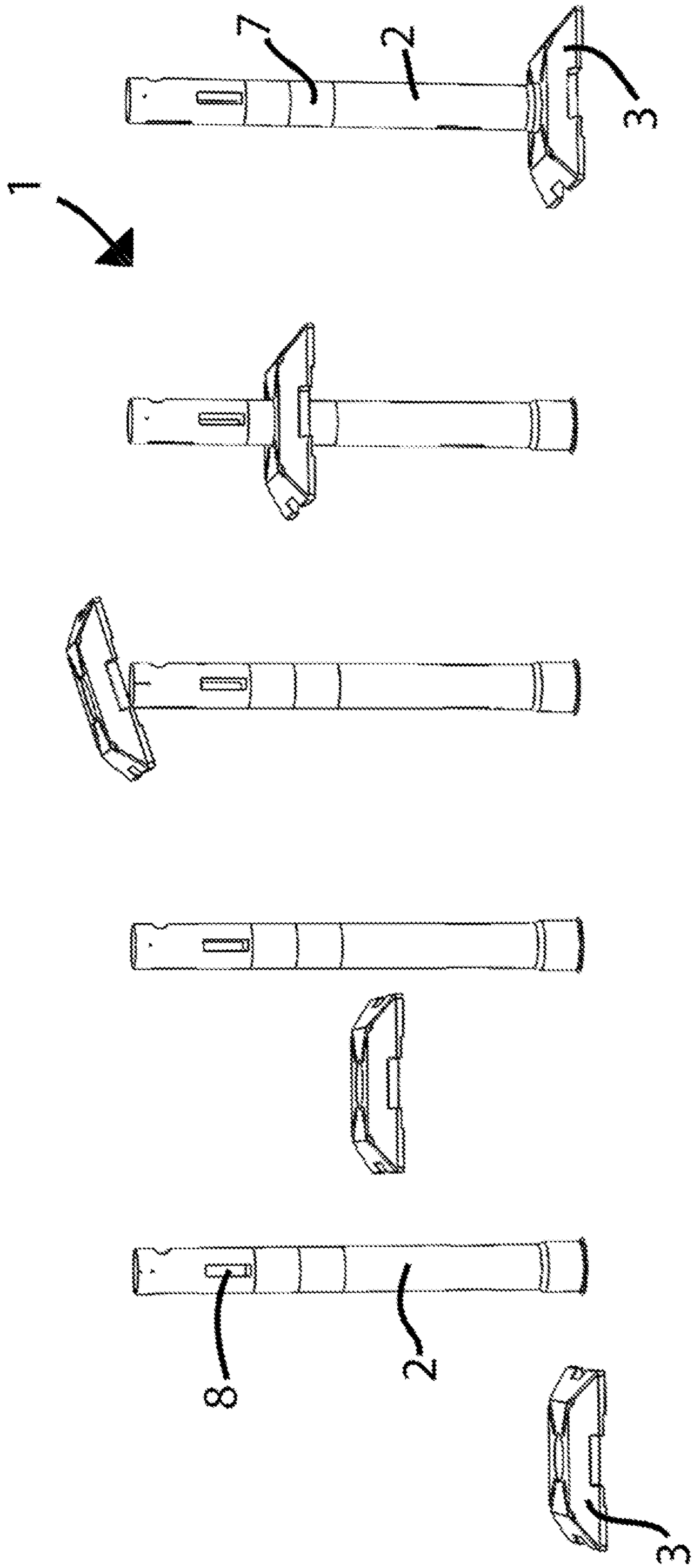

Fig. 2

DK 2016 70142 A1

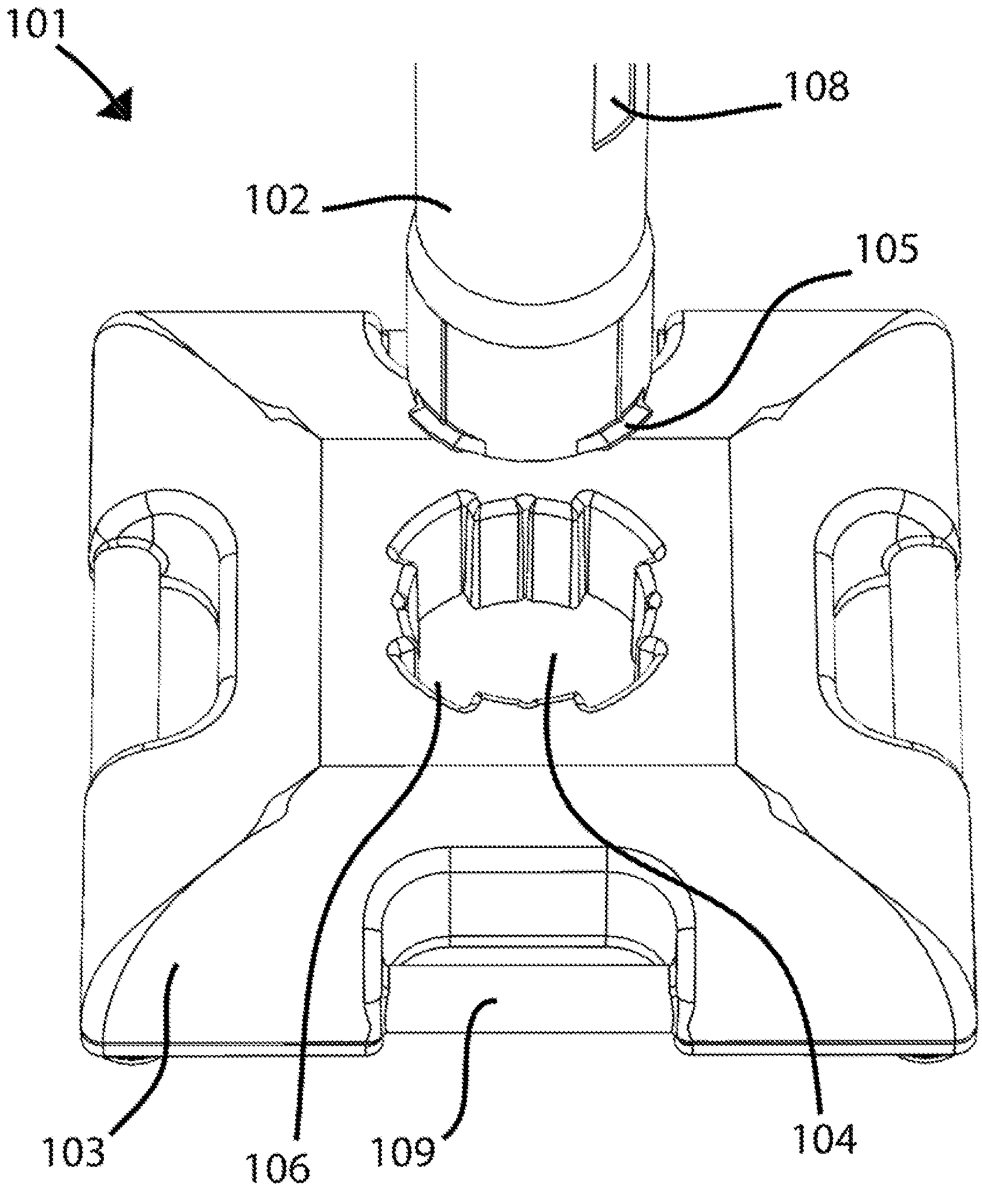

Fig. 3a

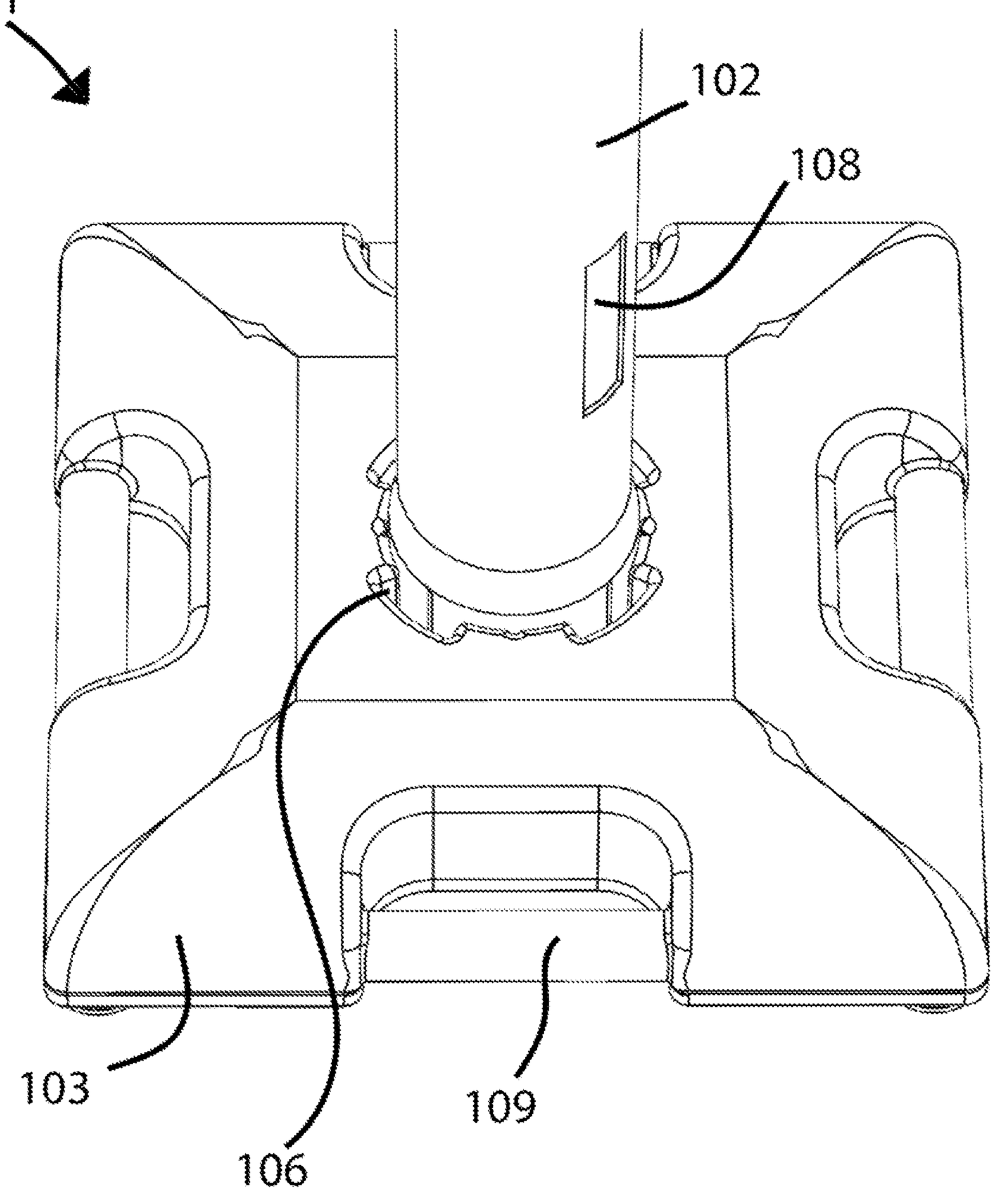

Fig. 3b

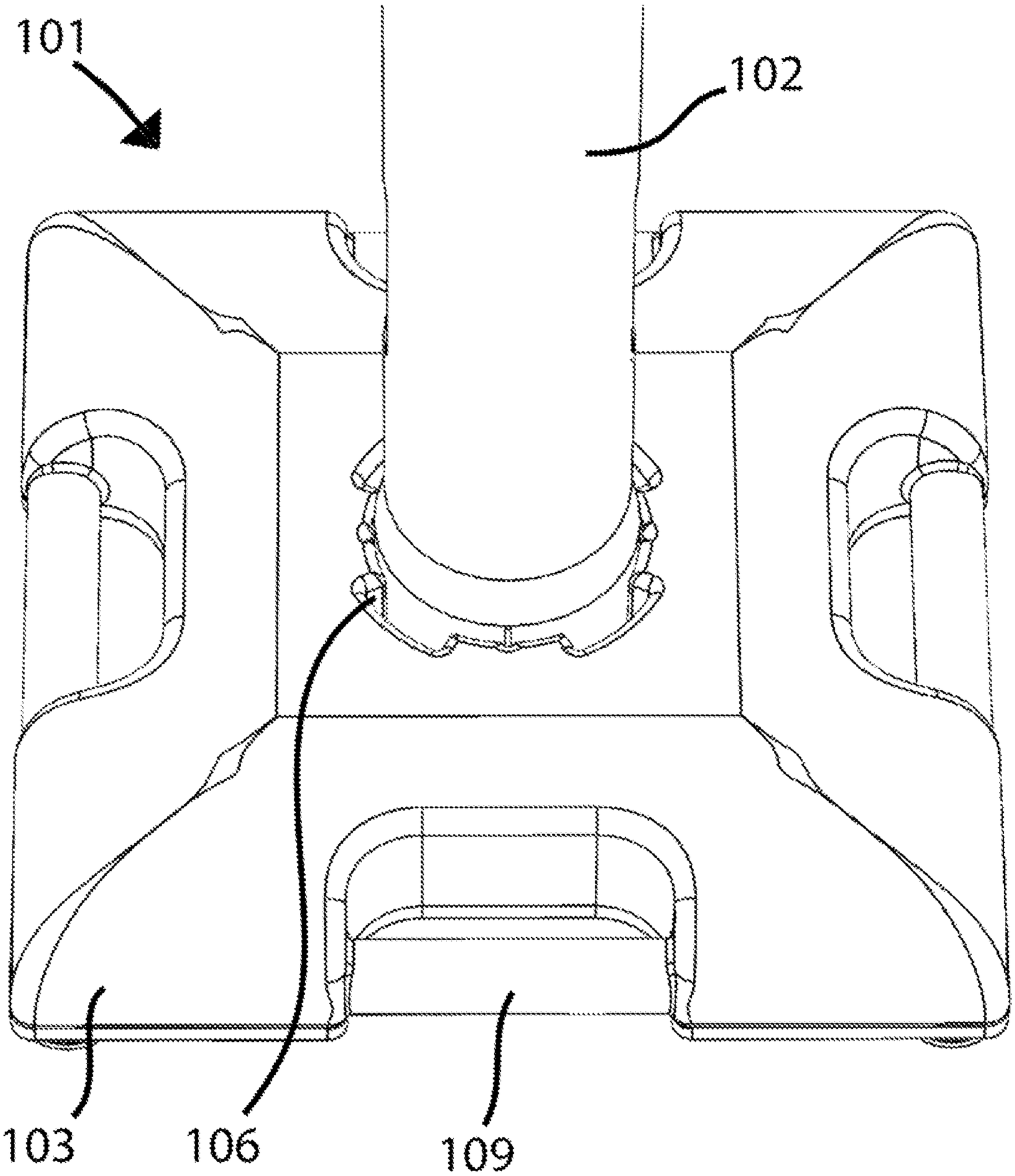

Fig. 3c

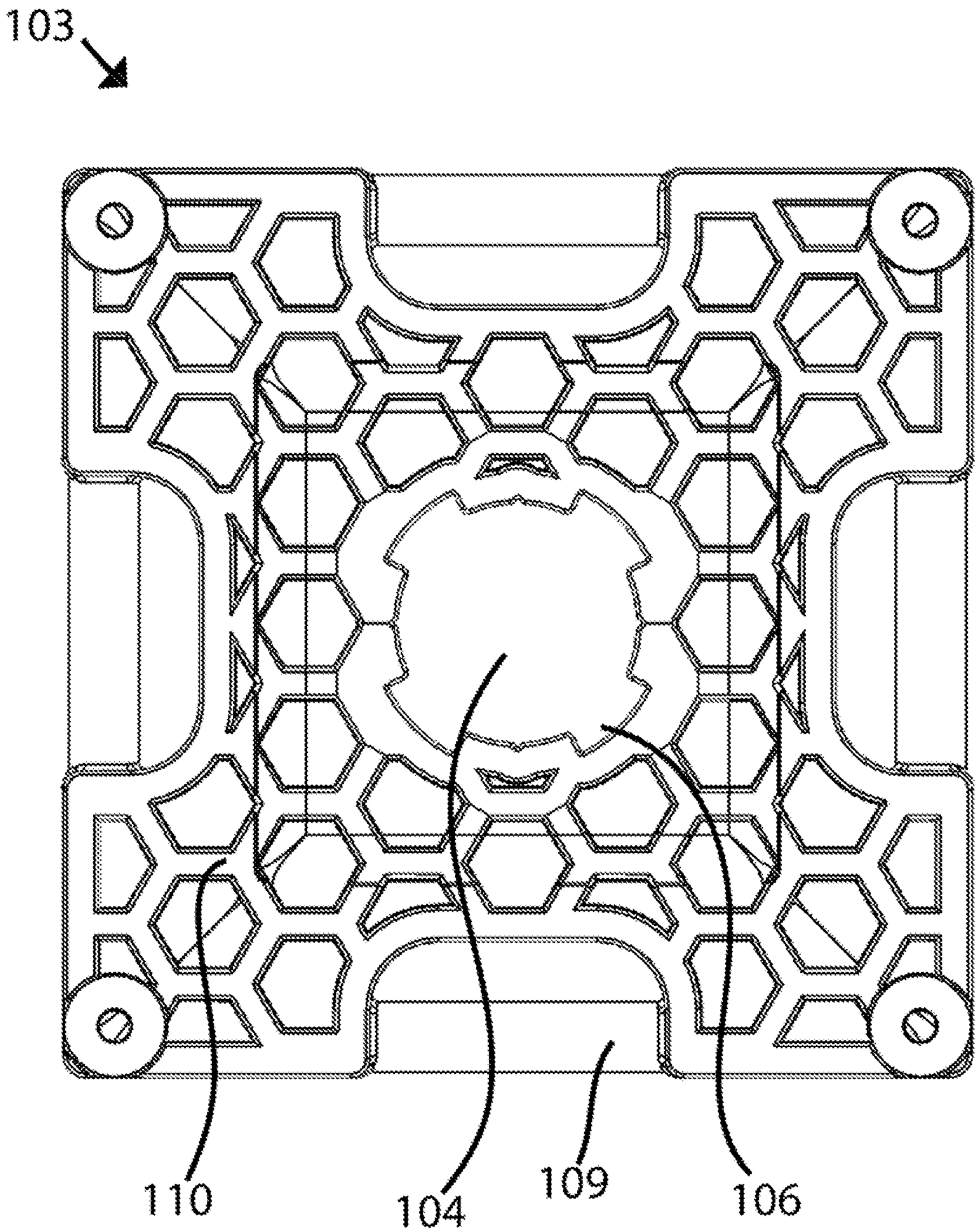

Fig. 4a

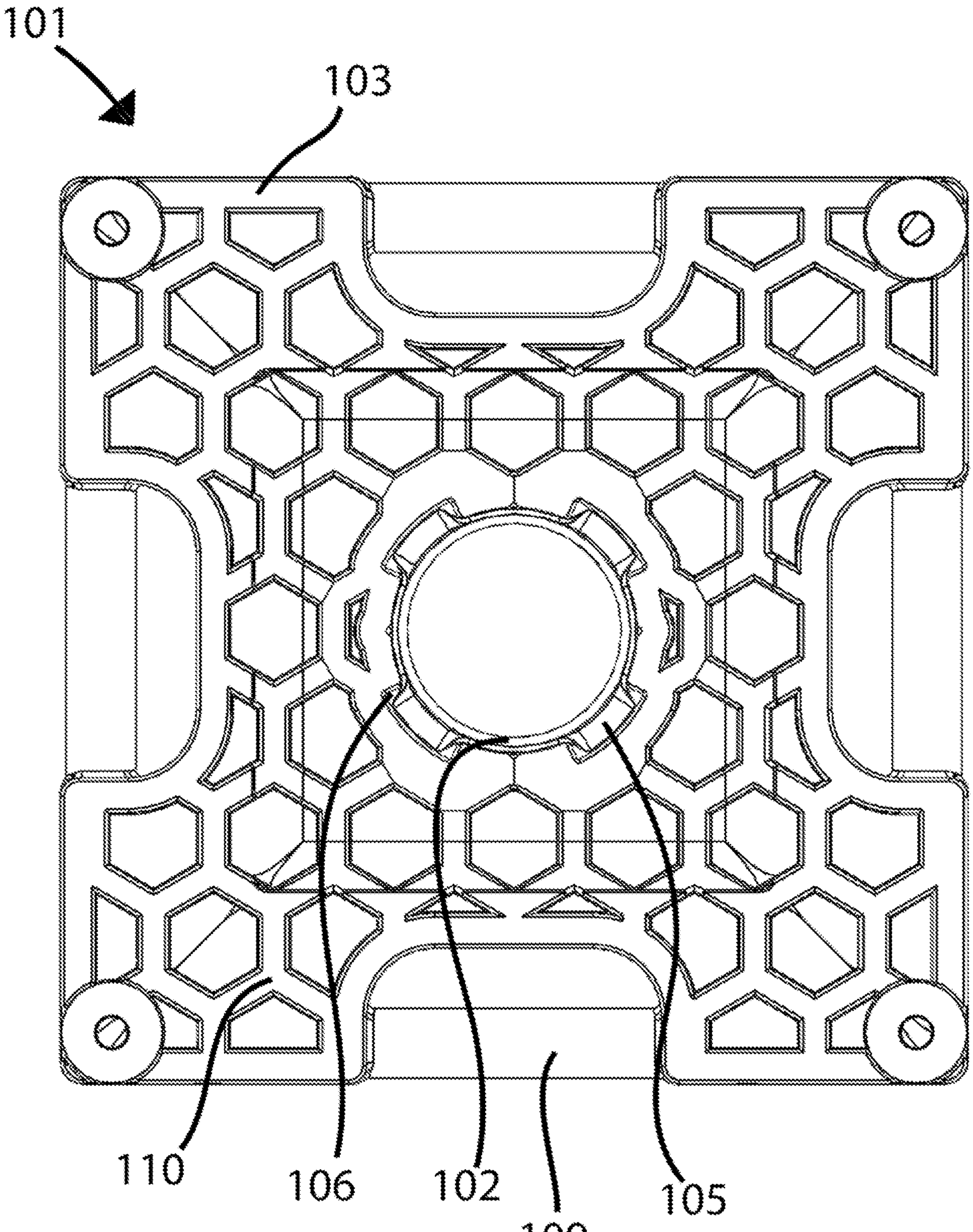

Fig. 4b

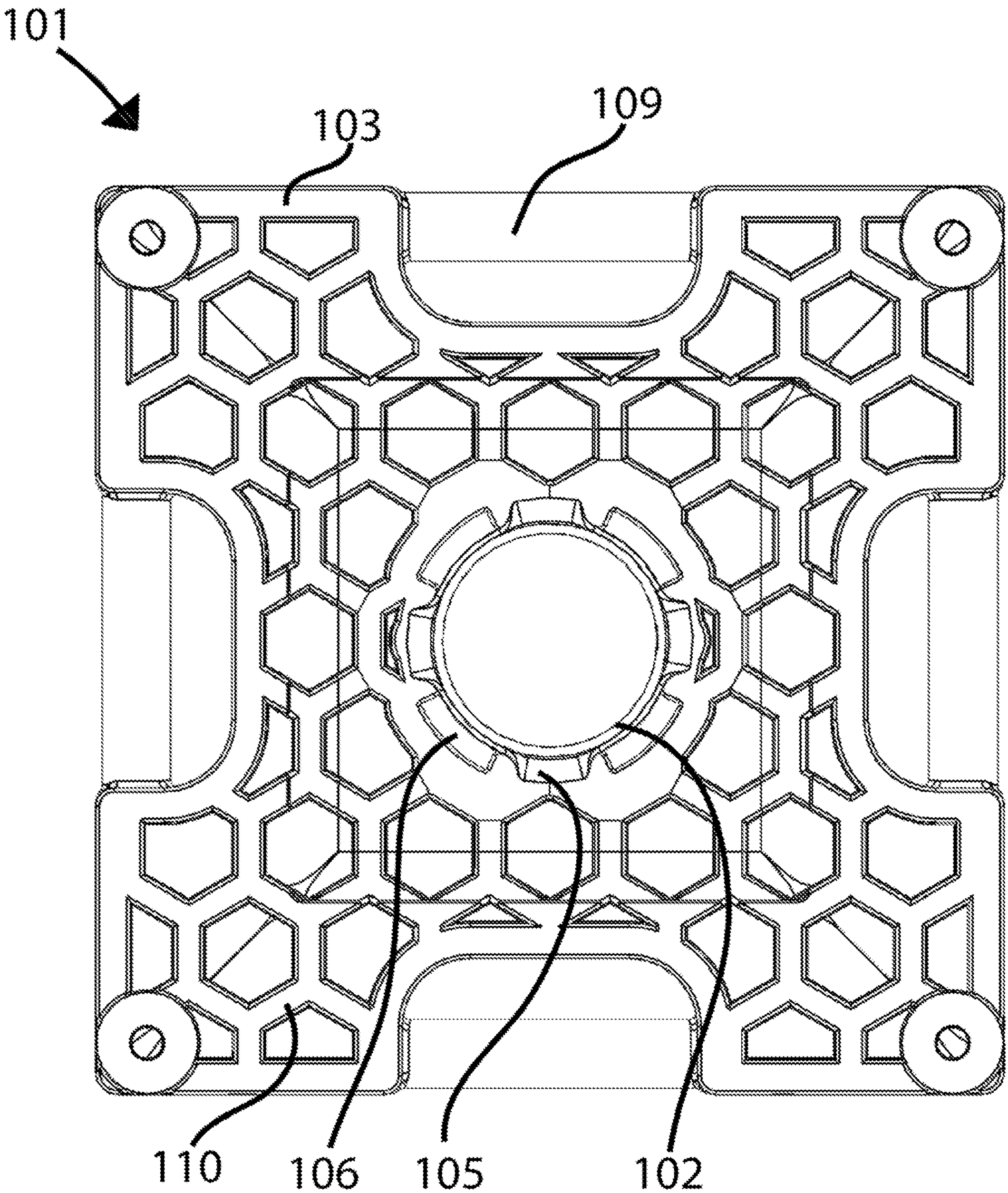

Fig. 4c

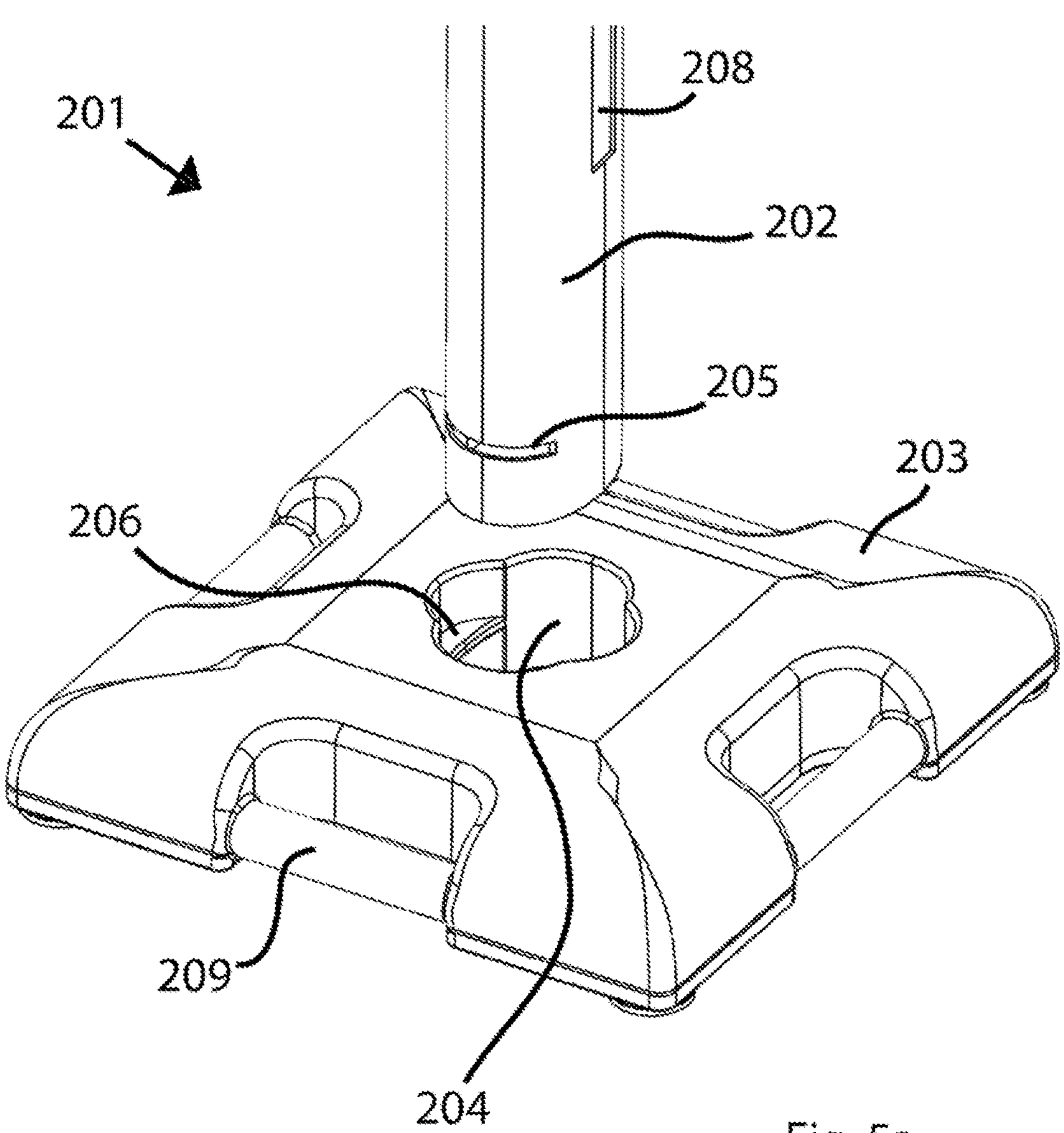

Fig. 5a

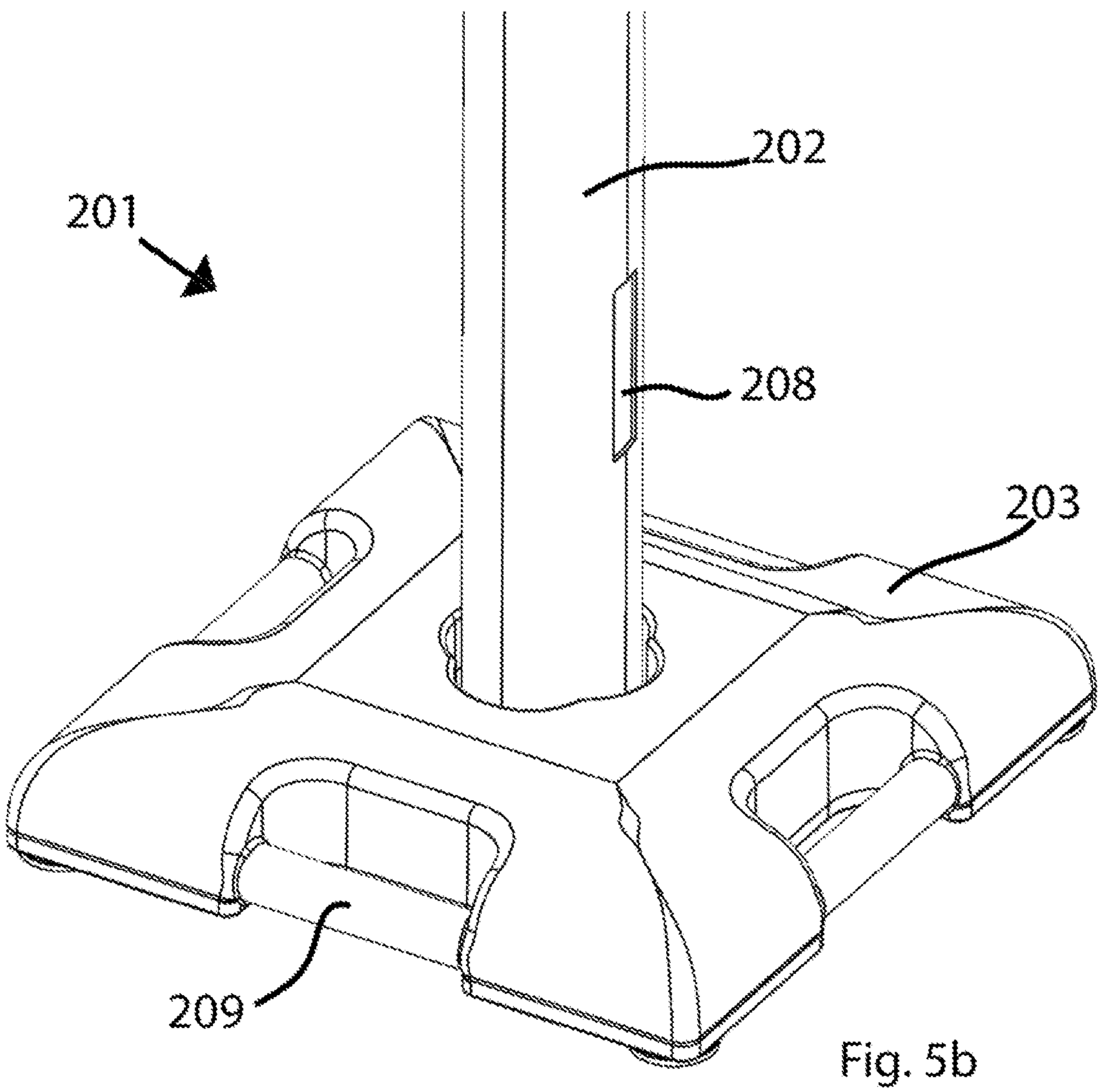

Fig. 5b

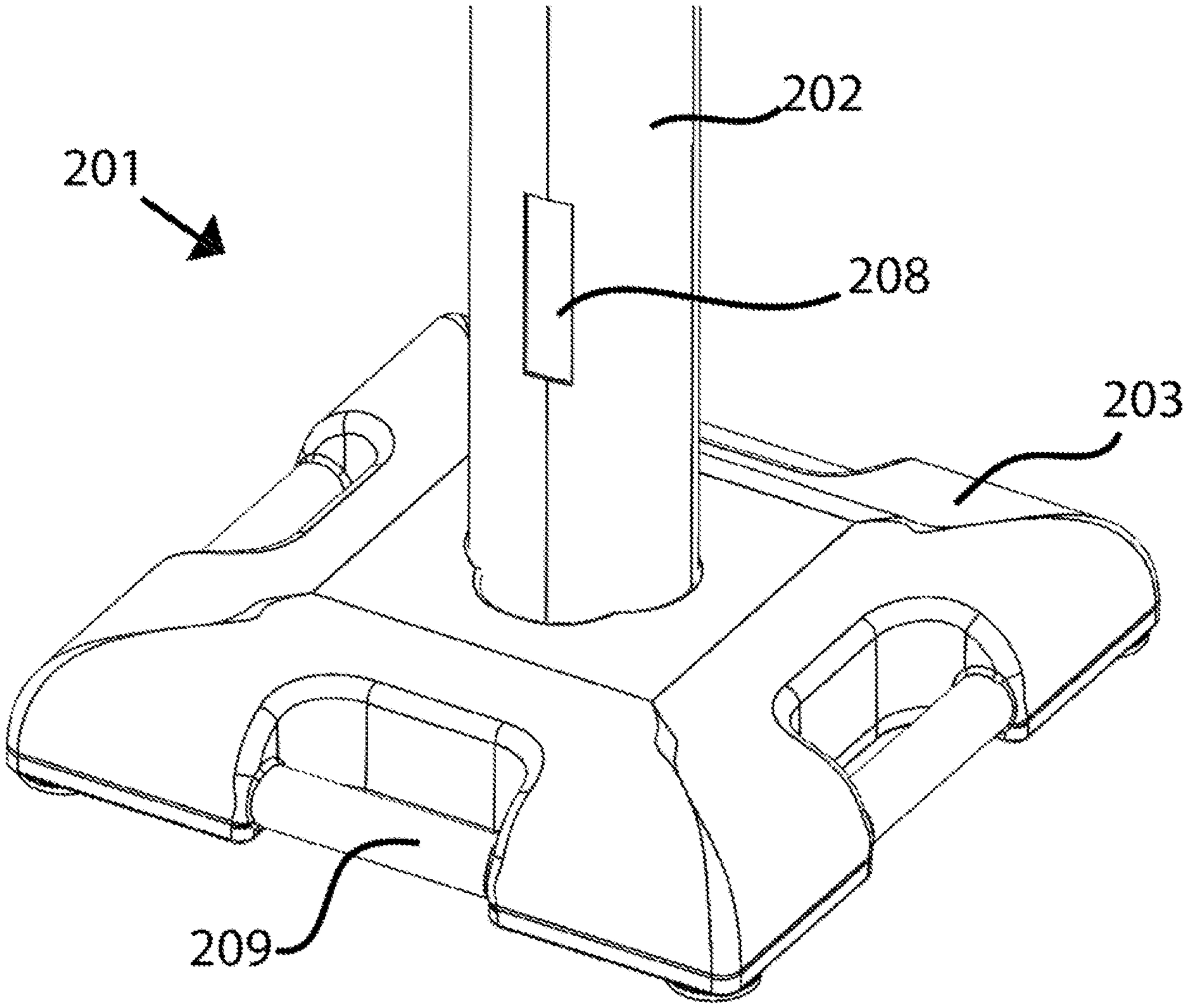

Fig. 5c

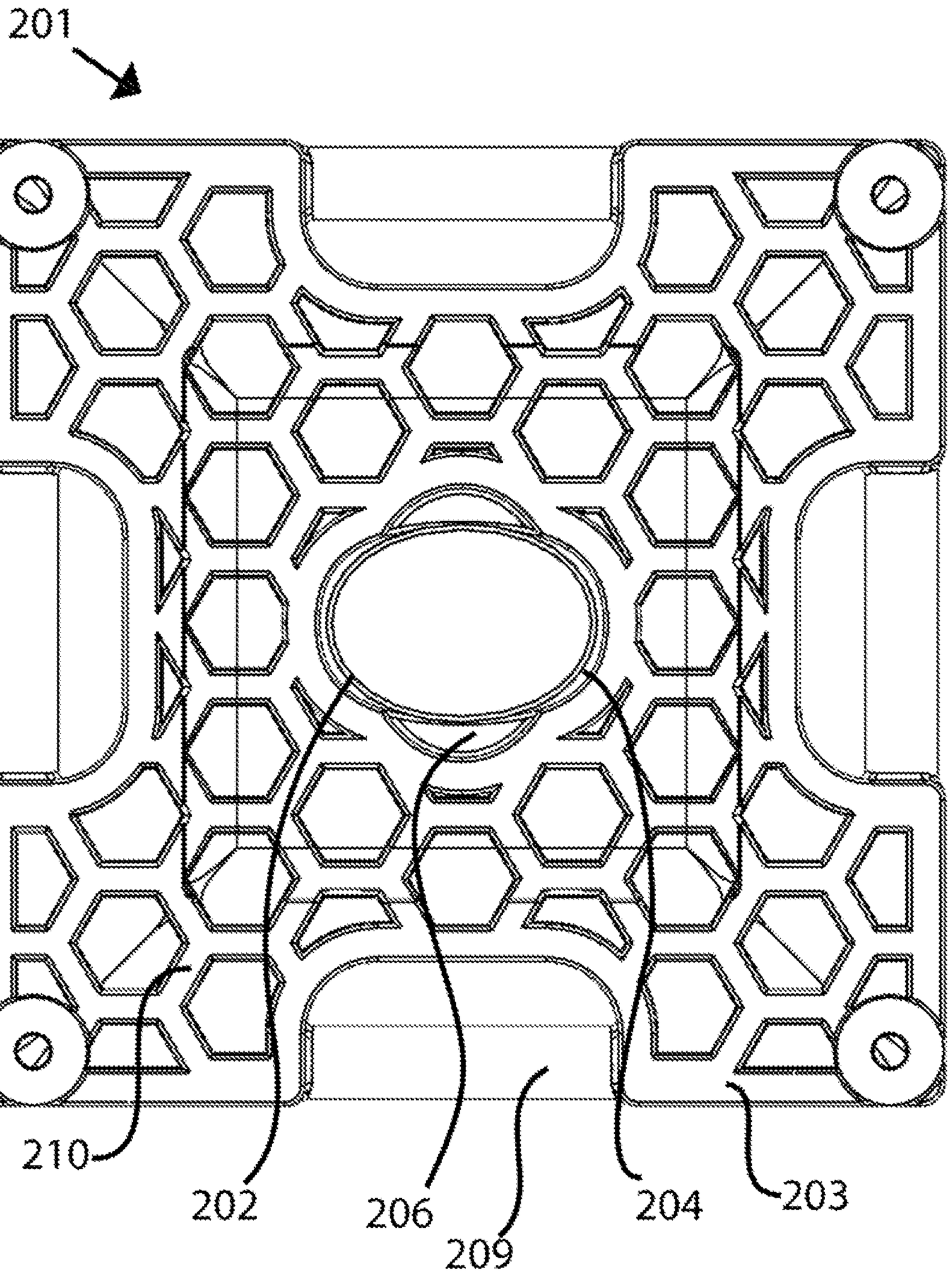

Fig. 6a

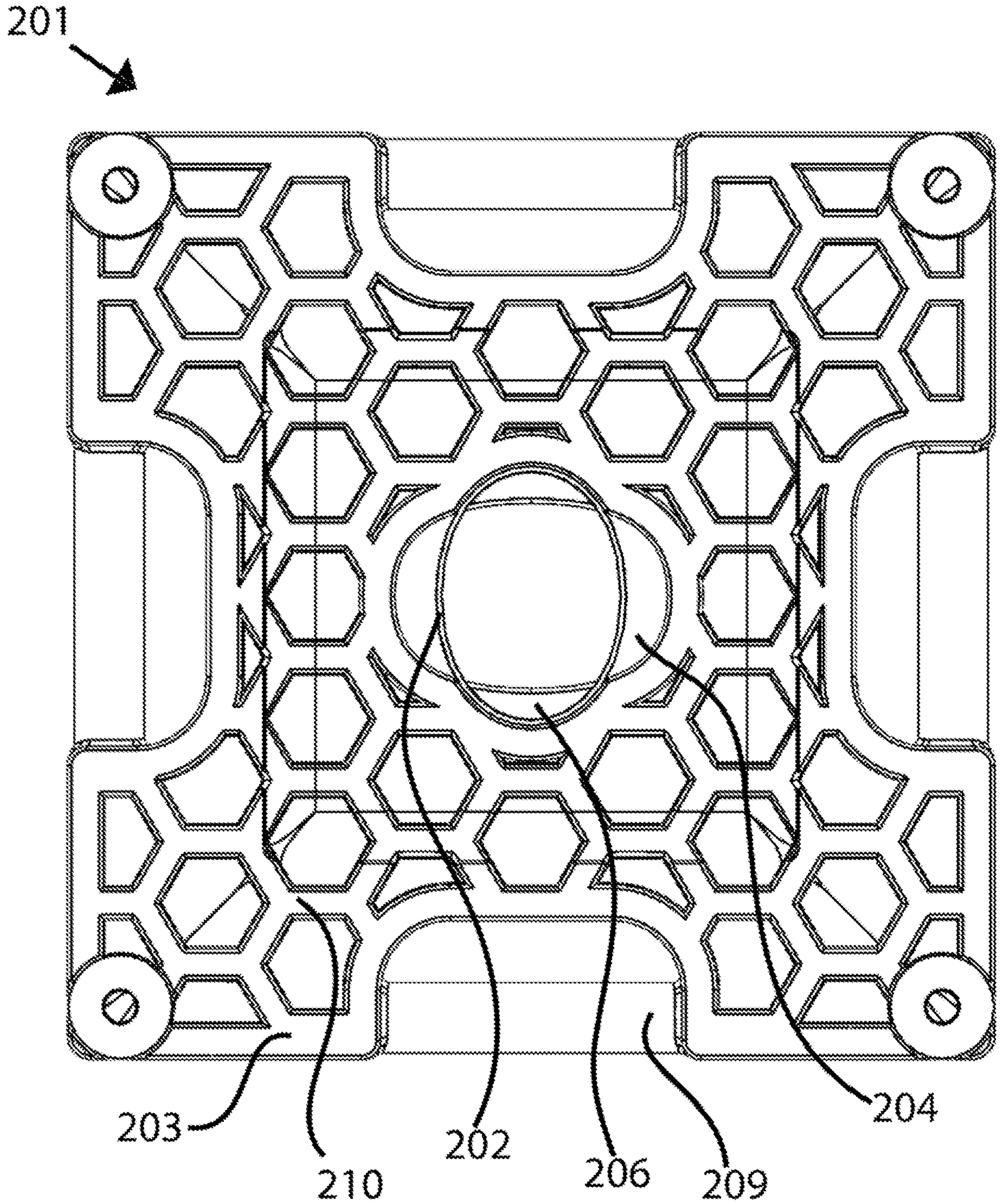

Fig. 6b