United States Patent [19]

Szpytman

[11] **3,871,317**

[45] **Mar. 18, 1975**

[54] **WATERCRAFT**

[76] Inventor: **Jack J. Szpytman,** 910 N. Brys Dr., Grosse Pointe Woods, Mich. 48236

[22] Filed: **July 16, 1973**

[21] Appl. No.: **379,333**

[52] **U.S. Cl.** ..... **114/66.5 R,** 114/66.5 H, 115/67 R

[51] **Int. Cl.** **B63b 1/30**

[58] **Field of Search** ..... 114/66.5 R, 66.5 H, 66.5 P, 114/66.5 F, 67 A, 61

[56] **References Cited**

UNITED STATES PATENTS

1,815,303	7/1931	Kloen	114/66.5 H
2,369,129	2/1945	Bell et al.	114/66.5 P
2,704,529	3/1955	Hulett	114/61
3,476,069	11/1969	Mantle et al.	114/67 A
3,702,598	11/1972	Szpytman	114/66.5 R

FOREIGN PATENTS OR APPLICATIONS

492,037	6/1919	France	114/66.5 P
133,985	6/1929	Switzerland	114/67 A

Primary Examiner—Robert J. Spar
Assistant Examiner—Donald W. Underwood
Attorney, Agent, or Firm—Harness, Dickey & Pierce

[57] **ABSTRACT**

A watercraft with a tunnel providing one or more aerodynamic lifting surfaces, together with stabilizing fins in the form of hydroplanes or hydrofoils, and propulsion means aligned with the stabilizing fins. The combined effect of the lifting surfaces and stabilizing fins lifts the craft to reduce hydrodynamic resistance and provides enhanced roll and pitch stability. In a preferred form, the tunnel has two lifting surfaces in tandem, each surface being curvilinear and sloping downwardly and aftwardly at its rearward portion. Hydrofoils and hydroplanes are provided on the bottoms of the outer sponsons and an additional hydrofoil is mounted on an enlarged central forward portion of the hull. One propulsion means is mounted at the after end of the forward central hull portion and the other two at the after end of the sponsons, the hull propulsion means being aligned with the stabilizing fins.

13 Claims, 5 Drawing Figures

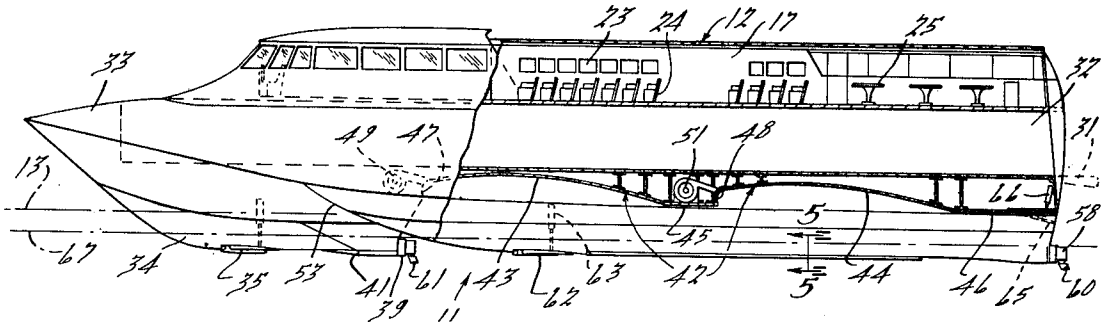

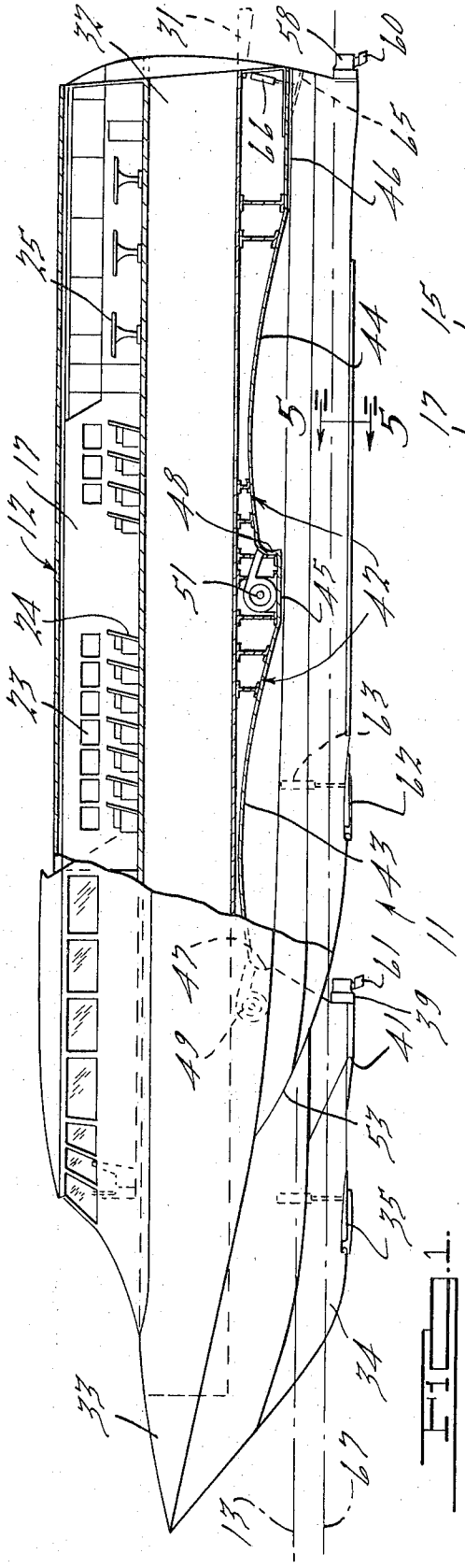

FIG. 1.

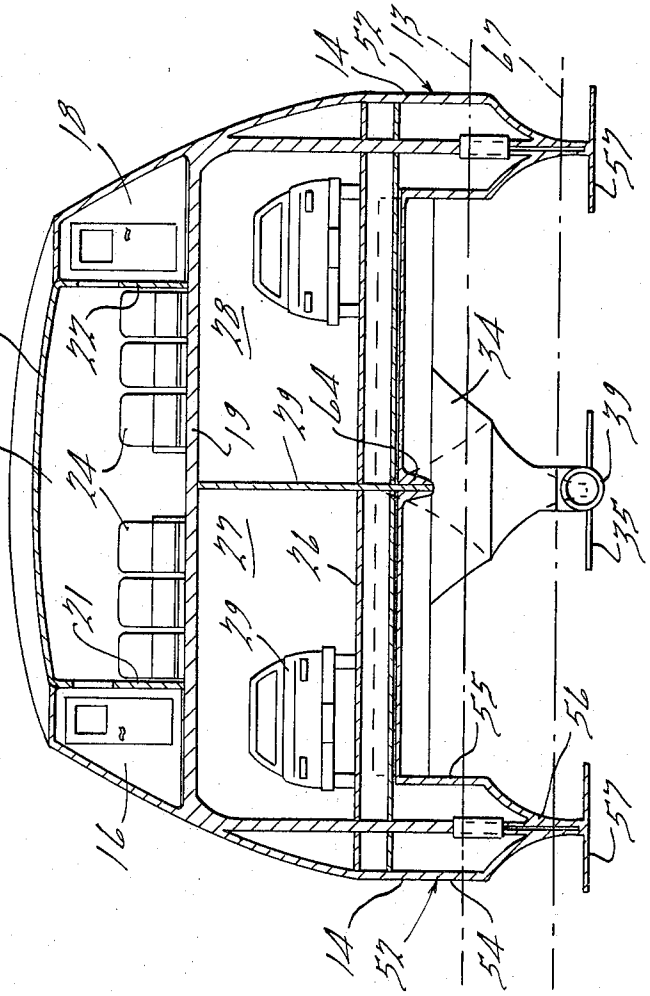

FIG. 2.

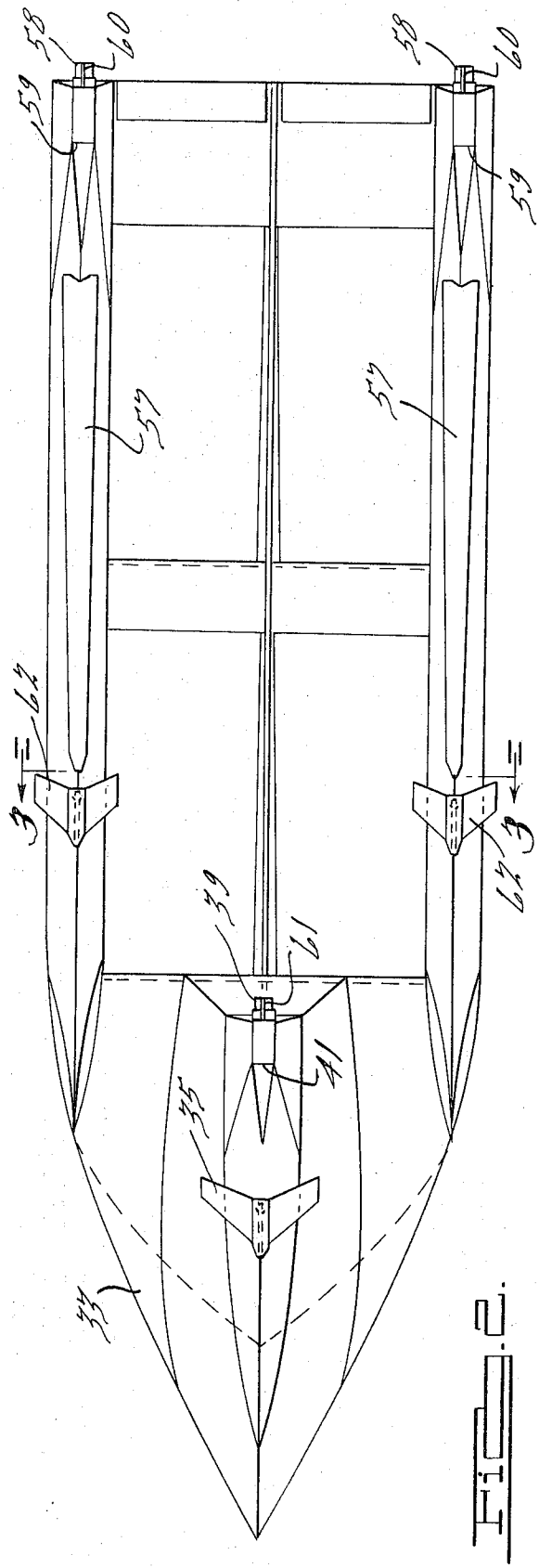

Fig. 2.

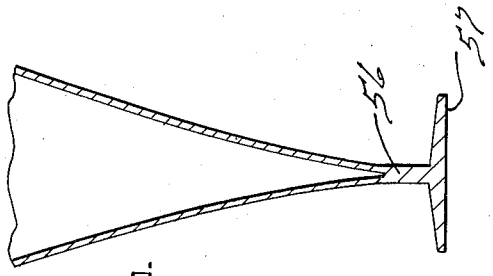

Fig. 5.

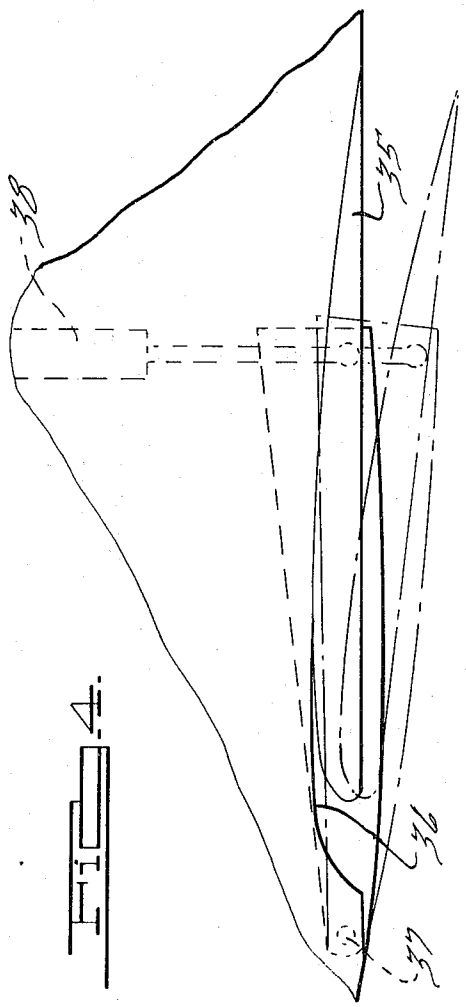

Fig. 4.

WATERCRAFT

BACKGROUND OF THE INVENTION

The invention relates to watercraft of the type utilizing aerodynamic forces created during motion to lift the craft at least partially out of the water, thus reducing the wetted surface and spray resistance, and increasing speed. The application is related to my U.S. Pat. No. 3,702,598 issued Nov. 14, 1972 and entitled "Watercraft" as well as to my application Ser. No. 205,017 filed Dec. 6, 1971.

BRIEF SUMMARY OF THE INVENTION

It is an object of the present invention to provide a watercraft of this type which has enhanced speed characteristics and is capable of operating with a minimum use of mechanical systems.

It is another object to provide a watercraft of this nature having improved lateral or roll stability and which minimizes any torque effect on the hull caused by a vertical moment arm between the engine thrust and the stabilizing fins which might adversely affect the attitude of the vessel.

It is another object to provide an improved watercraft having these characteristics, in which prow and keel means are provided for protecting the hydrofoils from damage, acting as skirts for containing the air cushion and housing the hydrofoil adjusting means.

Briefly, the watercraft of this invention comprises an elongated hull, an undersurface on said hull having a concavely curved aerodynamic lifting shape configured to provide an upwardly acting force applied to said craft in response to flow of air therealong, stabilizing fin means carried by laterally spaced portions of said hull below said aerodynamic lifting surface, and propulsion means carried by said hull.

BRIEF DESCRIPTION OF THE DRAWINGS

FIG. 1 is a side elevational view, partly in section, showing a watercraft incorporating the principles of this invention.

FIG. 2 is a bottom plan view thereof.

FIG. 3 is a cross-sectional view in elevation taken along the line 3–3 of FIG. 2.

FIG. 4 is an enlarged fragmentary detailed view of one of the hydrofoils and its adjusting mechanism.

FIG. 5 is an enlarged fragmentary cross-sectional view in elevation taken along the line 5–5 of FIG. 1 showing the construction of one of the hydroplanes.

DESCRIPTION OF THE PREFERRED EMBODIMENT

The watercraft is generally indicated at **11** and comprises an elongated hull generally indicated at **12**, the major portion of which is of rectangular shape in plan, as best seen in FIG. **2**. Above the at-rest water line **13**, hull **12** is provided with sides **14** which extend upwardly as shown in FIG. **3** and then slope inwardly, being joined by a cabin top **15** at their upper ends. Compartments **16, 17** and **18** are formed between top **15** and a deck **19**, the compartments being separated by longitudinal bulkheads **21** and **22**. These three compartments may be utilized for passenger purposes, lights **23**, seats **24** and tables **25** being shown for this purpose. A second deck **26** extends between sides **14** below deck **19** with the space therebetween being divided into compartments **27** and **28** by a longitudinal bulkhead **29**. These compartments are utilizable for cargo purposes. If, for example, the watercraft is being used as a car ferry, vehicles **29** may be stored in these compartments, a ramp **31** being indicated partially in FIG. **1** for loading and unloading through an access opening **32**.

The forward portion **33** of hull **12** is tapered and flared as seen in FIGS. **1** and **2**. Hull portion **33** is deeper than the remainder of the hull (except for the sponsons to be described later) and its underside **34** is provided with a hydrofoil **35**. The construction of the hydrofoil is seen best in FIGS. **1, 2** and **4**. The hydrofoil is disposed within a recess **36** in hull bottom **34** and is pivoted at its forward end as indicated at **37**. The hydrofoil is of airfoil shape and is actuatable between a recessed or cruising position shown in solid lines in FIG. **4** and a takeoff position shown in dot-dash lines. The solid line position is within recess **36** whereas the takeoff position has a greater angle of incidence to achieve added lift.

The means for actuating hydrofoil **35** may comprise a reciprocable fluid actuated motor **38** or other appropriate means disposed within hull portion **33**.

Propulsion means in the form of a jet drive **39** is carried by hull bottom **34** rearwardly of and aligned with hydrofoil **35**. The jet drive has a water intake **41** seen in FIG. **1**. Alternative propulsion means such as a propeller could be used.

The hull bottom rearwardly of bottom portion **34** is generally indicated at **42** in FIG. **1** and comprises a pair of aerodynamic lifting surfaces **43** and **44** in tandem. The curvilinear shape of these surfaces is similar to that shown in my above-mentioned U.S. Pat. No. 3,702,598, each surface having an upwardly and aftwardly extending forward portion, a generally horizontal intermediate portion and a downwardly and aftwardly extending rearward portion. These portions are smoothly blended into an airfoil shape to provide surfaces which will impart substantial lifting forces to the craft when in movement, due to the air cushion effect. Bottom **42** has an intermediate portion **45** between surfaces **43** and **44** and an after portion **46**. Portions **45** and **46** are flat lifting surfaces which blend smoothly with the aerodynamic surfaces immediately forwardly thereof.

Re-entrant portions **47** and **48** are formed at the forward ends of surfaces **43** and **44** respectively. The pockets created by these surfaces will tend to trap air and prevent it from escaping forwardly. Optionally, blowers **49** and **51** may be provided for delivering air to pockets **47** and **48** respectively. The combined effect of the pockets and blowers will counteract accumulated air cushion backup and assist in creating air buildup.

A pair of sponsons generally indicated at **52** are provided along opposite sides of the craft to form, together with bottom portion **42**, a tunnel to entrap air which will act against aerodynamic surface **42**. Sponsons **52** extend from the after end of hull portion **33** to the after end of the vessel and have faired bow portions **53** indicated in FIG. **1**. The upper portions of the sponsons have outer side walls **54** contiguous with sides **14** and inner side walls **55**, but the lower portions **56** are tapered to thin cross sections for lateral stability, as seen in FIG. **5**. Flange type hydroplanes **57** are mounted along the bottoms of the sponsons. The shape of these hydroplanes is seen in FIG. **2**, the hydroplanes gradu-

ally flaring in an after direction. These hydroplanes extend along a major portion of the sponsons and a pair of jet drives **58** are mounted in the after ends of the sponsons, the jet drives being aligned with the hydroplanes. These jet drives have water intakes **59** (FIG. **2**), Jet drives **58** as well as drives **39** are provided with rudders **60** and **61** respectively mounted adjacent thereto.

A pair of hydrofoils **62** are mounted under the forward ends of sponsons **52** as seen in FIGS. **1** and **2**. These hydrofoils are shaped similarly to hydrofoil **35** and are pivoted at their forward ends for movement from cruising positions within sponson recesses to lower or takeoff positions. Reciprocable motors **63** are provided for hydrofoils **62**. The hydrofoils are aligned with hydroplanes **57** and thus with jet drives **58**.

A keel member **64** extends centrally along bottom **42**, the keel being directly under bulkhead **29**. An airflow control leveler **65** is mounted at the after end of the vessel contiguously with flat surface **46**, this leveler being actuatable by a reciprocable motor **66** to control the amount of air flow.

In operation, movement of the craft along the water will cause it to rise due to the combined effects of the stabilizing fins (hydroplanes and hydrofoils) and aerodynamic surface **42**. The craft will rise so that the water line will be as indicated at **67** in FIGS. **1** and **3**. The takeoff positions of hydrofoils **35** and **62** will facilitate rising of the craft, after which the hydrofoils may be retracted to their cruising positions. Sponsons **54** will act to protect the hydrofoils from damage, as skirts for containing the air cushion impacting aerodynamic surface **42**, and as lateral stabilizing means. Hydroplanes **57** will increase the lateral stability of the craft as well as contributing to the lifting action.

Because of the alignment of propulsion means **39** and **58**, with the stabilizing fins (hydrofoils and hydroplanes) there will be little, if any, torque tending to affect the attitude of watercraft **11**. This will facilitate keeping it on an even keel.

I claim:

1. A watercraft comprising an elongated hull, an under surface on said hull having a concavely curved aerodynamic lifting shape configured to provide an upwardly acting force applied to said craft in response to flow of air therealong, stabilizing fin means carried by laterally spaced portions of said hull below said aerodynamic lifting surface, each of said last-mentioned hull portions carrying said stabilizing fin means at its lower end, each of said stabilizing fin means having a generally flat horizontal lateral configuration in cross section with exposed downwardly facing and upwardly facing surfaces extending laterally outwardly on opposite sides of said lower end, and propulsion means carried by said hull, said aerodynamic lifting surfaces comprising two concave surfaces in tandem, each surface comprising an upwardly and aftwardly extending forward portion, a substantially horizontal intermediate portion, and a downwardly and aftwardly extending rearward portion, a flat surface being provided on the underside of the hull between said two aerodynamic sections.

2. The combination according to claim **1**, said stabilizing fin means comprising a single pair of elongated hydroplanes fixed to sponsons on opposite sides of said lifting surface and extending along major portions of said sponsons.

3. The combination according to claim **1**, said stabilizing fin means comprising a pair of hydrofoils movably mounted on opposite sides of said surface, and means for moving said hydrofoils between upper cruising positions and lower takeoff positions.

4. The combination according to claim **1**, said propulsion means comprising a pair of propulsion units on opposite sides of said hull aligned with said stabilizing fin means.

5. The combination according to claim **4**, said stabilizing fin means comprising aftwardly flared hydroplanes extending along the bottoms of sponsons on opposite sides of said surface.

6. The combination according to claim **5**, said hull having a relatively deep forward portion, said stabilizing fin means further comprising a hydrofoil movably mounted beneath said forward hull portion, means for moving said hydrofoil between an upper cruising position and a lower takeoff position with a greater angle of incidence, and a propulsion unit carried by the after end of said forward hull portion and aligned with said hydrofoil.

7. The combination according to claim **1**, further provided with a pair of relatively thin elongated sponsons along opposite sides of said hull, the forward ends of said sponsons being faired, said stabilizing fin means comprising a pair of hydrofoils pivotally mounted at their forward ends beneath said sponsons, said sponsons acting as skirts for containing the air cushion formed beneath said craft and impinging on said aerodynamic surface, reciprocable motor means within said sponsons connected to said hydrofoils for moving them between upper cruising positions and lower take- off positions, and recesses in said sponsons for receiving and protecting the hydrofoils when in cruising position.

8. The combination according to claim **7**, said propulsion means being carried by the after ends of said sponsons and being aligned with said hydrofoils.

9. The combination according to claim **8**, the lower portions of said sponsons having relatively thin cross sections for lateral stability, said stabilizing fin means further comprising flange type hydroplanes fixed to the undersides of said sponsons and extending therealong.

10. The combination according to claim **1**, the forward ends of said two aerodynamic lifting surface sections being reentrantly formed to provide pockets which tend to trap air so as to prevent the air from escaping forwardly.

11. The combination according to claim **10**, further provided with blowers within said hull with their outlets connected to said last-mentioned pockets to counteract accumulated air cushion backup.

12. A watercraft comprising an elongated hull having a major portion of generally rectangular shape in plan and a forward tapered hull portion, said forward hull portion being deeper than the remainder of the hull, a hydrofoil pivotally mounted in a recess beneath said forward hull portion, reciprocable motor means within said forward hull portion for actuating said hydrofoil between an upper cruising position and a lower takeoff postion, propulsion means carried by the after end of said forward hull portion in alignment with said hydrofoil, an aerodynamic lifting surface on the underside of the main hull portion, said lifting surface having two sections in tandem, each section having an upwardly and aftwardly extending forward portion, a substantially horizontal intermediate portion and a down-

wardly and aftwardly sloping rear portion with the portions being blended together to provide a concave curvilinear surface creating an upwardly acting aerodynamic force in response to flow of air therealong, a pair of sponsons extending downwardly on opposite sides of said hull alongside said lifting surface to form a tunnel therewith, a pair of hydrofoils pivotally mounted in recesses under the forward ends of said sponsons, reciprocable motor means within said sponsons for moving said last-mentioned hydrofoils between cruising and takeoff positions, fixed flange type hydroplanes secured to the undersides of said sponsons and extending therealong in alignment with said last-mentioned hydrofoils, and a pair of propulsion units at the ends of said sponsons and in alignment with said hydroplanes.

13. A watercraft comprising an elongated hull, an undersurface on said hull having a concavely curved aerodynamic lifting shape configured to provide an upwardly acting force applied to said craft in response to flow of air therealong, stabilizing fin means carried by laterally spaced portions of said hull below said aerodynamic lifting surface, each of said last-mentioned hull portions carrying said stabilizing fin means at its lower end, each of said stabilizing fin means having a generally flat horizontal lateral configuration in cross section with exposed downwardly facing and upwardly facing surfaces extending laterally outwardly on opposite sides of said lower end, and propulsion means carried by said hull, said aerodynamic lifting surface comprising a plurality of surface sections extending from front to rear each surface section comprising an upwardly and aftwardly sloping forward portion, a substantially horizontal intermediate portion, and a downwardly and aftwardly sloping rearward portion, said surface sections being longitudinally aligned with one another and located between said laterally spaced hull portions, with said portions being blended together in curvilinear fashion and each surface section connected with the preceding surface section by a substantially horizontal intermediate section.

* * * * *