July 13, 1965 H. A. GRABOWSKI 3,194,217

BOILER CLEANUP METHOD FOR COMBINED CIRCULATION STEAM GENERATOR

Filed March 25, 1963

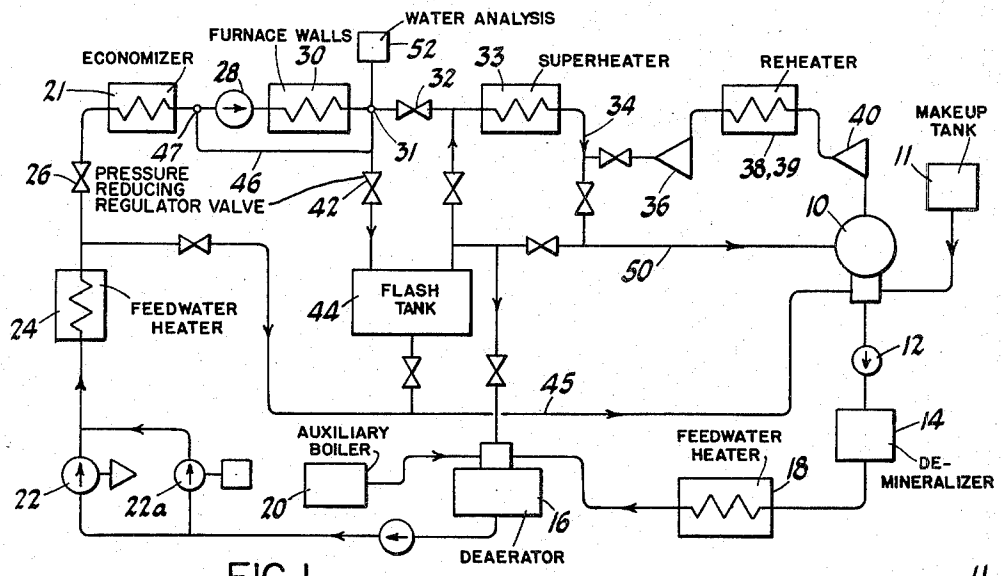

FIG. 1

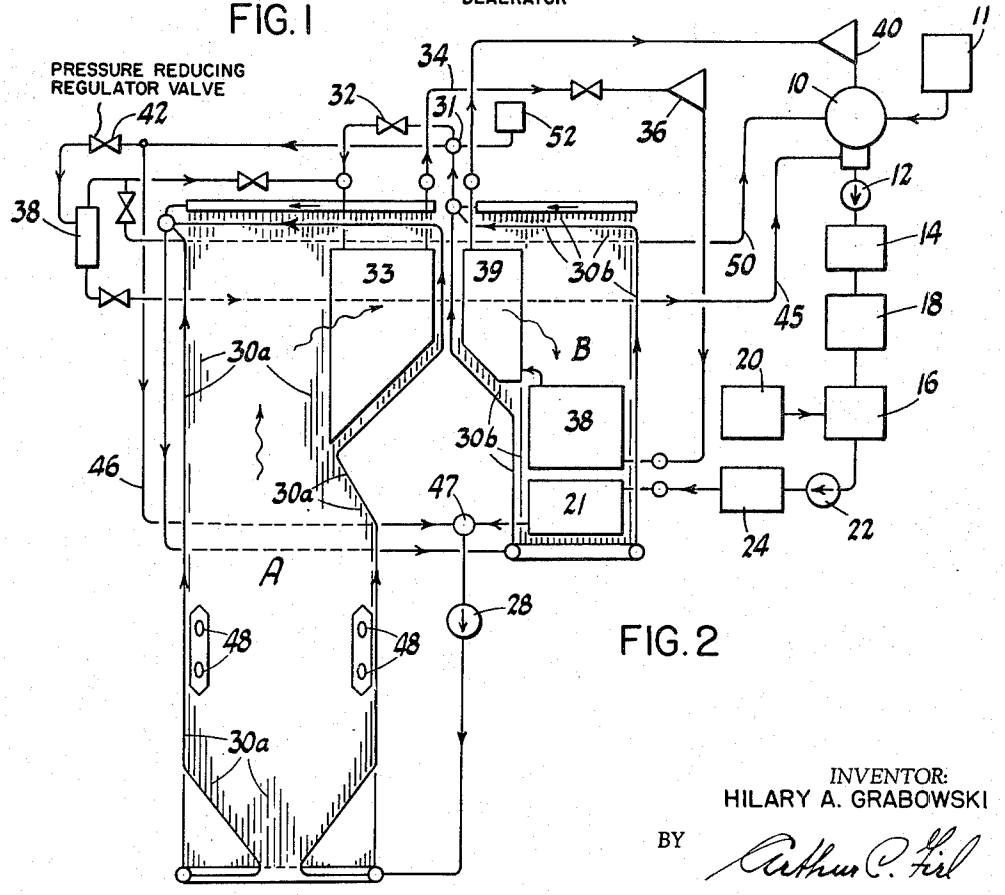

FIG. 2

INVENTOR:
HILARY A. GRABOWSKI

BY Arthur C. Fiel

AGENT

United States Patent Office 3,194,217 Patented July 13, 1965

3,194,217

BOILER CLEANUP METHOD FOR COMBINED CIRCULATION STEAM GENERATOR

Hilary A. Grabowski, West Simsbury, Conn., assignor to Combustion Engineering, Inc., Windsor, Conn., a corporation of Delaware

Filed Mar. 25, 1963, Ser. No. 267,588
5 Claims. (Cl. 122—379)

The invention relates to a method for removing impurities and solids from the feedwater and the heating surfaces of a once-through flow steam generator. More specifically the invention is concerned with a boiler cleanup method as applied to the type of once-through flow steam generator commonly known as combined circulation steam generator.

In a conventional once-through flow steam generator practically all the water flowing through the highest gas temperature zone such as the furnace wall tubes passes to the superheater and turbine. In contrast thereto, in a combined steam generator a large portion of the water passing through the highest gas temperature zone is continuously recirculated around this zone by returning it from the outlet to the inlet thereof.

In a conventional once-through boiler, for startup operation, it is desirable to fire sufficient fuel to raise the temperature of the water to 550° F. at a corresponding pressure to prevent formation of steam. Moreover, the unit must be equipped with a superheater and turbine bypass system capable of operating at a minimum of 30 percent of maximum steam generating load, to insure that a minimum safe water velocity, such as for example 3 f.p.s., is maintained in the furnace wall tubes for the prevention of overheating of these tubes. At this minimum startup load a firing rate or heat release somewhat in excess of 30 percent of maximum heat release would have to be maintained for several hours for boiler cleanup and for water cleanup purposes. During this time water continuously flows through the feedwater system and furnace tubes until the concentration of oxides and other impurities in the boiler water has been reduced to an acceptable value.

When operating the steam generator at 30 percent of maximum load however, the hot combustion gases generated in the furnace and passing over the superheater and reheater heating surfaces are of a temperature far in excess of the permissible temperature at which these surfaces can be exposed during the initial startup and cleanup period when steam does not flow through the superheater or reheater. Consequently in a conventional once-through steam generator a large amount of the heat contained in the water leaving the furnace wall tubes, instead of being discharged to the condenser, must be imparted to the feedwater through the de-aerator and by heating of the feedwater heaters. In this manner the temperature of the feedwater entering the furnace wall tubes can be increased, permitting a lower heat release in the furnace to a point where the temperature of the combustion gases passing over the superheater and reheater is reduced to a safe limit.

While it is desirable to return the heat in the water leaving the furnace wall tubes to the feedwater system as above indicated such practice however permits solids flushed out of the boiler by the water to settle out on the shell side of the feedwater heater, for instance, from whence these solids later could be picked up when the unit is operating at normal load and thereby contribute to contamination of the feedwater. Thus the cleanup system becomes self-defeating and only partially accomplishes the purpose for which it was originally designed.

The invention avoids the above disadvantages by dividing the total flow leaving the furnace wall tubes into a major portion and a minor portion; recirculating the major portion around the furnace wall tubes without loss of heat and reduction of pressure (except for unavoidable radiation and line pressure losses), thereby maintaining the minium flow velocity required for guarding the tubular surface against overheating; and passing the minor portion to the condenser, thence through the demineralizer, de-aerator and feedwater heaters back to the boiler. In this manner the heat input into the furnace can be lowered to an amount far below the heat input which would produce a gas temperature endangering the superheater and reheater heating surfaces. At the same time this heat input does not need to be reduced such as by imparting some of the heat leaving the furnace wall tubes to the shell side of the feedwater heater. Contamination of the feedwater therefore is completely avoided and the cleanup system fully accomplishes the purpose for which it was designed.

It is accordingly an object of the present invention to provide a method of boiler cleanup which insures a safe velocity in the furnace wall tubes without requiring a heat release which may endanger the superheater and reheater heating surfaces, and without the necessity of passing a portion of the heated and possibly contaminated effluent from the furnace wall tubes over the heat absorbing surface of the feedwater heaters and thereby pollute these surfaces.

Other objects and advantages of the invention will become apparent from the following description of an illustrative embodiment thereof when taken in conjunction with the accompanying drawings wherein:

FIG. 1 is a diagrammatic representation of the steam power plant showing the piping layout utilized in practicing the invention; and

FIG. 2 is a diagrammatic representation of the steam power plant with the steam boiler depicted in elevational view showing both the combustion gas flow as well as the feedwater flow through the various flow circuits of the steam generator.

Referring now to the drawing, chemically treated water of acceptable purity is introduced into condenser 10 from from a makeup tank 11 for the purpose of filling the boiler and recirculating the water for boiler cleanup purposes. This water passes through condenser pump 12 into a filter and polishing demineralizer 14. Demineralizer and filter are provided for the removal of salts that may have entered by way of condenser leakage and also for removal of corrosion products that are formed in the feedwater booster pump 22*a* is provided to furnish pump-de-aerator 16 via a low pressure feedwater heater 18. In the de-aerator gases such as air and oxygen are removed by application of heated steam obtained from an auxiliary boiler 20. The de-aerated water then passes into economizer 21 by way of feed pump 22, high pressure feedwater heater 24 and feedwater valve 26. A feedwater booster jump 22*a* is provided to furnish pumping power during startup operation. From the economizer 21 the water flows by way of recirculating pump 28 into furnace wall tubes 30. In FIG. 2 these furnace wall tubes 30 are shown as comprising tubes 30*a* lining the walls of combustion chamber A, and tubes 30*b* lining the walls of the gas rear pass B with the flow through tubes 30*a* and 30*b* combining at 31. A boiler stop and throttle valve 32 is provided in the conduit between the furnace wall and superheater to prevent the water from entering superheater 33 during the cleanup period. At normal operation of the boiler this valve is open and the steam generated in the furnace tubes flows through superheater 33 and conduit 34 to a high pressure turbine 36. From the high pressure turbine the steam passes through reheaters 38, 39 and thence to low pressure turbine 40 and back to condenser 10.

In accordance with the invention during the boiler cleanup period a relatively small portion of the water is returned via boiler extraction valve 42, flash tank 44 and conduit 45 to the condenser 10, thereby completing the feedwater and boiler cleanup circuit.

The remaining major portion of the water having passed through the furnace wall tubes 30 (30*a*, 30*b*) is recirculated around these heating surfaces by way of conduit 46 and by the action of recirculating pump 28. This major portion joins and mixes with the minor portion of the feedwater at 47. Since no heat is taken from this major or recirculated portion it combines with the minor or through-flow portion at a temperature substantially the same as the temperature attained at the outlet 31 of the furnace walls.

In FIG. 2 there is shown an elevational diagrammatic view of the steam generator having a furnace chamber A defined by walls being lined with tubes 30*a*, and a rear gas pass B defined by walls being lined with tubes 30*b*, as earlier described hereinabove. Fuel and air is discharged into furnace chamber A by way of burners 48 for the burning of the fuel therein and the generation of combustion gases which rise within furnace A, pass horizontally into rear gas pass B as indicated by the arrows. These gases radiate heat to tubes 30*a* lining the walls of the combustion chamber and pass over steam heating surfaces such as superheater 33, reheaters 38 and 39 and economizer 21 for the heating of steam and water respectively during normal operation of the boiler. They also radiate heat to tubes 30*b* lining the rear pass B of the steam generator. After having given up a major portion of the heat contained therein these gases pass over additional heating surfaces such as an air heater (not shown) before being discharged into the atmosphere.

When starting up a high pressure once-through flow steam generator it is of great importance that feedwater of the highest purity be used in the boiler and for water makeup purposes. Consideration therefore must be given towards treatment of the water to prevent corrosion of the metallic surfaces of the boiler, scaling and contamination of the steam. This attention must entail the treatment of the raw water that is introduced into the cycle from the makeup tank 11 and must also be directed towards the conditioning of the water already present in the preboiler cycle such as feedwater heaters, piping, etc. and that which is present in the boiler itself.

While the boiler is originally filled with feedwater of acceptable purity, contamination of this water occurs while in contact with the metallic surfaces of the boiler due to reaction of iron, copper, etc. with water, forming metallic oxides especially at high temperatures. Other sources of contamination are the presence of oxygen or air in the water which greatly accelerates the forming of corrosion products and possible leakage of cooling water in the condenser. The corrosion products whether of the soluble or insoluble variety must be removed from the boiler water and boiler interior before the unit is placed on the line. It is greatly desired that such clean-up operation proceeds without the possibility of adding to the contamination of the water during the startup period or a later stage of operation.

Thus the inventive method provides that the heated water, after having passed through the furnace tubes and carrying impurities flushed therefrom, is not used to furnish heat to the feedwater heaters, i.e., is prevented from coming into contact with the shell side of the feedwater heater. It has been found that such contact results in the impurities that are carried in the water being deposited on the surfaces of the heater. When the unit is later put on full load operation these deposits due to the high velocity of the heating fluid enter the feedwater cycle and greatly contribute to corrosion and scaling and contamination of the steam passing to the turbine.

In accordance with the invention the herein disclosed method of boiler cleanup has been designed primarily for the purpose of entirely excluding the possibility of feedwater contamination by feedwater preheating as presently experienced in conventional methods of boiler cleanup. The inventive method as applied to a once-through steam generator operating at a supercritical pressure of 3500 p.s.i.g. (pounds per square inch gage) will now be described:

Feedwater of acceptable purity from makeup tank 11 or other source is fed into the condenser 10, passed through the preboiler system, and at a temperature of approximately 230° F. is delivered by the booster feed pump 22*a* to economizer 21 and to furnace wall tubes 30 (30*a*, 30*b*). While the boiler is filled and vented through vents (not shown) valve 32 is closed to isolate the superheater from the steam generating portion of the boiler. Boiler extraction valve 42 is also closed and set to hold the pressure at 1000 p.s.i.g.

As the temperature of the water increases during the startup period, the set pressure of valve 42 will be gradually raised to maintain the pressure well above the saturation point of the water. Eventually this pressure will reach 3500 p.s.i.g. at a water temperature of 550° F.

With the pressure in the boiler set at approximately 1000 p.s.i.g. the turbine driven feed pump 22 is started using steam from auxiliary boiler 20. A flow of approximately 5% of maxium flow is being established with the boiler extraction valve 42 controlling the pressure at 1000 p.s.i.g. To maintain a minimum safe velocity in the furnace tubes the circulation pump 28 is started thereby establishing a velocity in the furnace tubes greatly in excess of that obtained with the 5% through flow and corresponding to a total velocity through the furnace wall tubes preferably corresponding to 60% of maximum flow. At this point the burners are lighted off and the temperature of the water and the pressure at the furnace wall outlet 31 is gradually raised to 600° F. and 3500 p.s.i.g. with a through flow or cleanup flow of about 5% passing through boiler extraction valve 42. This through flow of 5% represents a relatively minor portion of the total flow of approximately 60% of maximum flow passing through the furnace wall tubes 30 (30*a*, 30*b*), whereas the remaining major portion of 55% is recirculated by way of conduit 46 and through the action of recirculating pump 28.

A portion of the 5% through flow passing through valve 42 flashes into steam with the mixture being separated into water and steam in flash tank or separator 44. The steam is then conducted to the condenser 10 by way of conduit 50 and the water by way of conduit 45.

From the hot well of condenser 10 the feedwater flows through the filter and demineralizer 14, de-aerator 16 and having been purged of impurities and air is returned in clean condition to the boiler.

Recirculation of the 5% through flow portion of the water is continued until the impurities concentration in the water has been reduced to an acceptable value such as 20 p.p.b. (parts per billion). Samples of water are therefore taken at periodic intervals from a point in the cleanup circuit such as at the furnace wall outlet 31, with these samples being analyzed by well-known methods at 52.

While a through flow quantity of 5% has been found to be generally satisfactory, a higher or lower through flow quantity can be chosen, with the understanding however that a lower through flow quantity will increase the time required for total boiler cleanup, whereas a higher through flow quantity may require a heat release in the furnace of a magnitude which would endanger the heating surface of superheater 33 and reheaters 38, 39.

As regards the major portion of the feedwater, that which is being recirculated around the furnace wall tubes 30 (30*a*, 30*b*), past experience indicates that a quantity of about 55% of maximum flow is satisfactory in every respect. A lower quantity could be used however, provided the velocity of the water flowing through the highest heat absorption region of the furnace does not fall below

the velocity considered safe with respect to overheating of the tubes. This velocity in most cases is held above 3 f.p.s. A higher velocity however is preferred for the reason that scale and other sediment lodged in the boiler circuits is more readily flashed out with higher velocity flow.

In a conventional once-through boiler an initial flow of 30% during boiler cleanup cannot be exceeded, because of limitations in firing rate as earlier set forth herein. An increase of velocity of more than 233% therefore occurs when the steam generating load of the unit is raised from 30% to full load. Experience has shown that while the water may appear to be clean at 30% flow a considerable amount of impurities are stirred up by the higher velocity at the time when the unit goes on full load.

In contrast thereto the present invention permits a flow through the furnace wall circuits of preferably 60% during the cleanup period. At full load therefore the velocity would have only increased by approximately 60%. Not only will a smaller amount of impurities be stirred up when the unit goes on full load, but the inventive method provides that the flow through the furnace wall circuits during boiler cleanup can be raised to a velocity considerably higher than the velocity that could be tolerated in a conventional through flow boiler without recirculation. This higher velocity will not only result in a more and complete scouring of the inner surfaces of the boiler, but it will also greatly reduce the possibilities of sediments and scale being stirred up when the unit is operated at full load, because these impurities have already been removed during the boiler cleanup operation by virtue of the higher velocity.

In conclusion, the present invention has contributed in large measure to the solution of the boiler cleanup problem especially in once-through flow steam generators. This problem looms especially large when these boilers are operating at extremely high pressures such as above critical pressure. In these boilers maintenance of water at high purity is an absolute necessity. Thus the cleanup method herein disclosed accomplishes the following most desirable objectives:

(1) It establishes fluid flow of a high velocity and high temperature through the boiler circuits which tends to keep impurities in suspension and stirs up those which have settled out. The forming of sediment packets and resulting scaling is therefore largely eliminated;

(2) It progressively carries these suspended impurities out of the boiler circuits by means of a through flow fluid portion which is relatively small when compared with the fluid quantity flowing through the boiler circuits. Because of this small through flow quantity the heat release in the furnace is low, with the superheater and reheater tubes entirely safe from overheating; and

(3) It excludes any possibility of contaminating the heat absorbing side of feedwater heaters by the impurities contained in the through flow. Since the heat release in the furnace can now be maintained relatively low, the transfer of heat from the contaminated through flow fluid to the feedwater heaters to raise the inlet temperature of the feedwater becomes entirely unnecessary.

While I have illustrated and described two preferred embodiments of my invention, it is to be understood that such are merely illustrative and not restrictive and that variations and modifications may be made therein without departing from the spirit and scope of the invention. I therefore do not wish to be limited to the precise details set forth but desire to avail myself of such changes as fall within the purview of my invention.

I claim:

1. The method of removing impurities from the heating surface of a steam generator having a working fluid path including feed pump means, first heating surface located in a relatively high heat absorption zone and second heating surface located in a relatively low heat absorption zone collectively arranged in series in the working fluid flow sense, and recirculating means operatively connected to said fluid path at a first point downstream of said first heating surface, and to a second point upstream thereof but downstream of said feed pump means, and means for supplying heat to said heat absorption zones, comprising the steps of:

(1) passing a predetermined quantity of water through said first heating surface located in said high heat absorption zone at a predetermined velocity while heating said water to a predetermined temperature;

(2) passing a major portion of said water through said recirculating means around said first heating surface in said high heat absorption zone, while maintaining the pressure of said major and recirculated portion substantially constant throughout said recirculating means, thereby stirring up the impurities in said first heating surface and keeping them in suspension;

(3) removing the remaining minor portion of said water with impurities suspended therein from the outlet of said first heating surface;

(4) removing said impurities from said minor portion;

(5) returning said minor portion without said impurities to the inlet of said first heating surface; and

(6) repeating the aforesaid steps until the concentration of impurities in said water has been reduced to a desired value.

2. The method of removing impurities from the heating surface of a steam generator having a working fluid path including feed pumps means, a steam generating section and a steam heating section collectively arranged in series in the working fluid flow sense, and recirculating means operatively connected to said fluid path at a first point downstream of said steam generating section, and to a second point upstream thereof but downstream of said fuel pump means, and means for supplying heat to said steam generating and steam heating sections, comprising the steps of:

(1) passing a predetermined quantity of water through said steam generating section at a predetermined velocity while heating it to a predetermined temperature;

(2) passing a major portion of said water through said recirculating means around said steam generating section while maintaining the pressure of said major and recirculated portion substantially constant throughout said recirculating circuit, thereby stirring up the impurities in said steam generating section and keeping them in suspension;

(3) removing the remaining minor portion of said water with impurities suspended therein from the outlet of said steam generating section;

(4) removing said impurities from said minor portion;

(5) returning said minor portion without said impurities to the inlet of said steam generating section; and

(6) repeating the aforesaid steps until the concentration of impurities in said water has been reduced to a desired value.

3. In a combined circulation steam generator having a working fluid path including feed pump means, steam generating furnace tubes and steam superheating tubes collectively arranged in series in the working fluid flow sense, and recirculating means operatively connected to said fluid path at a first point downstream of said furnace tubes, and to a second point upstream thereof but downstream of said fuel pump means, means for firing fuel, a feedwater system including means for removing impurities from said feedwater, and means for determining the concentration of impurities of the water the method of removing impurities and solids from the water and from the furnace tubes during startup operation of the generator, comprising the steps of:

(1) passing feedwater through the furnace tubes at

least in a quantity consistent with a minimum safe velocity when firing the furnace;

(2) firing fuel in said furnace for heating said water to a predetermined temperature;

(3) after passage through the furnace tubes, dividing said water quantity into a relatively small portion and a relatively large portion;

(4) recirculating the large portion from the outlet of the furnace tubes to the inlet thereof while maintaining the pressure thereof substantially constant;

(5) flowing the small portion from the outlet of the furnace tubes through said means for removing impurities to the inlet of the furnace tubes;

(6) removing impurities and solids from said small portion by way of said impurities removing means;

(7) perodically testing the concentration of impurities and solids in said feedwater; and

(8) continuing recirculation of said large portion and the flow of said small portion until the impurities concentration in said feedwater is reduced to a predetermined acceptable limit.

4. In a combined circulation steam generator having a working fluid path including feed pump means, steam generating furnace tubes and steam superheating tubes collectively arranged in series in the working fluid flow sense, and recirculating means operatively connected to said fluid path at a first point downstream of said furnace tubes, and to a second point upstream thereof but downstream of said fuel pump means, means for firing fuel, a feedwater system including a hot well and means for removing impurities from said feedwater and means for determining the concentration of impurities of the water, the method of removing impurities and solids from the water and from the furnace tubes during startup operation of the generator, comprising the steps of:

(1) passing feedwater through the furnace tubes at least in a quantity consistent with a minimum safe velocity when firing the furnace;

(2) firing fuel in said furnace for heating said water to a predetermined temperature;

(3) after passage through the furnace tubes, dividing said water quantity into a relatively small portion and a relatively large portion;

(4) recirculating the large portion from the outlet of the furnace tubes to the inlet thereof while maintaining the pressure thereof substantially constant without loss of heat;

(5) recirculating the small portion from the outlet of the furnace tubes through said hot well and said impurities removing means to the inlet of the furnace tubes with loss of heat in the hot well;

(6) removing impurities from said feedwater by way of said impurities removing means;

(7) periodically testing the concentration of impurities in said feedwater; and

(8) continuing recirculation of said large portion and of said small portion until the impurities concentration in said feedwater is reduced to a predetermined acceptable limit.

5. In a combined circulation steam generator having a working fluid path including feed pump means, steam generating furnace tubes and steam superheating tubes collectively arranged in series in the working fluid flow sense, and recirculating means operatively connected to said fluid path at a first point downstream of said furnace tubes, and to a second point upstream thereof but downstream of said fuel pump means, means for firing fuel, a feedwater system including hot well, demineralizer and de-aerator means and means for determining the concentration of impurities of the water, the method of removing impurities and solids from the water and from the furnace tubes during startup operation of the generator, comprising the step of:

(1) passing feedwater through the furnace tubes at least in a quantity consistent with a minimum safe velocity when firing the furnace;

(2) firing fuel in said furnace for heating said water to a predetermined temperature;

(3) after passage through the furnace tubes, dividing said water quantity into a relatively small portion and a relatively large portion;

(4) recirculating the large portion from the outlet of the furnace tubes to the inlet thereof while maintaining the pressure thereof substantially constant without loss of heat;

(5) recirculating the small portion from the outlet of the furnace tubes through the hot well and the demineralizer and de-aerator means to the inlet of the furnace tubes;

(6) removing heat impurities and air from said small portion by way of said hot well, said demineralizer and de-aerator means respectively;

(7) periodically testing the concentration of impurities and solids in said feedwater; and

(8) continuing recirculation of said large portion and of said small portion until the impurities concentration in said feedwater is reduced to a predetermined acceptable limit.

References Cited by the Examiner

UNITED STATES PATENTS

3,009,325 11/61 Pirsh ..... 122—1

OTHER REFERENCES

Publication Mitteilunger, No. 1, September 1956, by Dorrwerke Aktiengesellschaft, Ratingen, Germany (pages 6–8).

PERCY L. PATRICK, *Primary Examiner.*

FREDERICK KETTERER, *Examiner.*

UNITED STATES PATENT OFFICE

CERTIFICATE OF CORRECTION

Patent No. 3,194,217 July 13, 19

Hilary A. Grabowski

It is hereby certified that error appears in the above numbered patent requiring correction and that the said Letters Patent should read as corrected below.

Column 2, line 49, strike out "booster pump 22a is provided to furnish pump-", and insert instead -- cycle. The feedwater then flows through a --; line 56, for "jump" read -- pump --; column 5, line 20, for "60%" read -- 66% --

Signed and sealed this 22nd day of February 1966.

(SEAL)
Attest:

ERNEST W. SWIDER
Attesting Officer

EDWARD J. BRENNER
Commissioner of Patents