Jan. 12, 1943. H. A. WELLNITZ 2,308,132

CONCRETE BLOCK-FORMING MACHINE

Filed Jan. 16, 1942 3 Sheets-Sheet 1

FIG. 1.

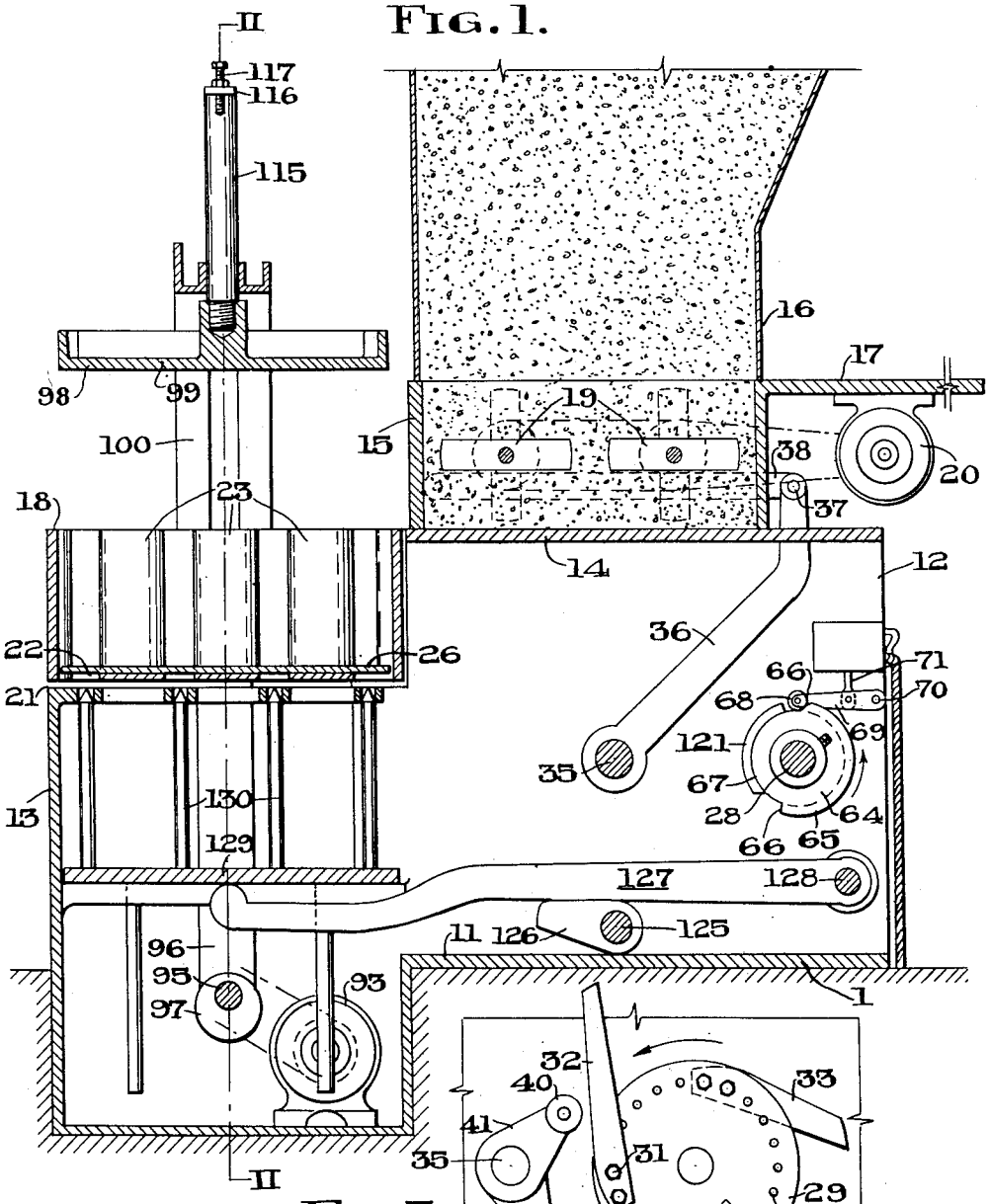

FIG. 3.

Inventor

HARRY A. WELLNITZ

W. S. McDowell

Attorney

Jan. 12, 1943. H. A. WELLNITZ 2,308,132

CONCRETE BLOCK-FORMING MACHINE

Filed Jan. 16, 1942 3 Sheets-Sheet 2

FIG. 2.

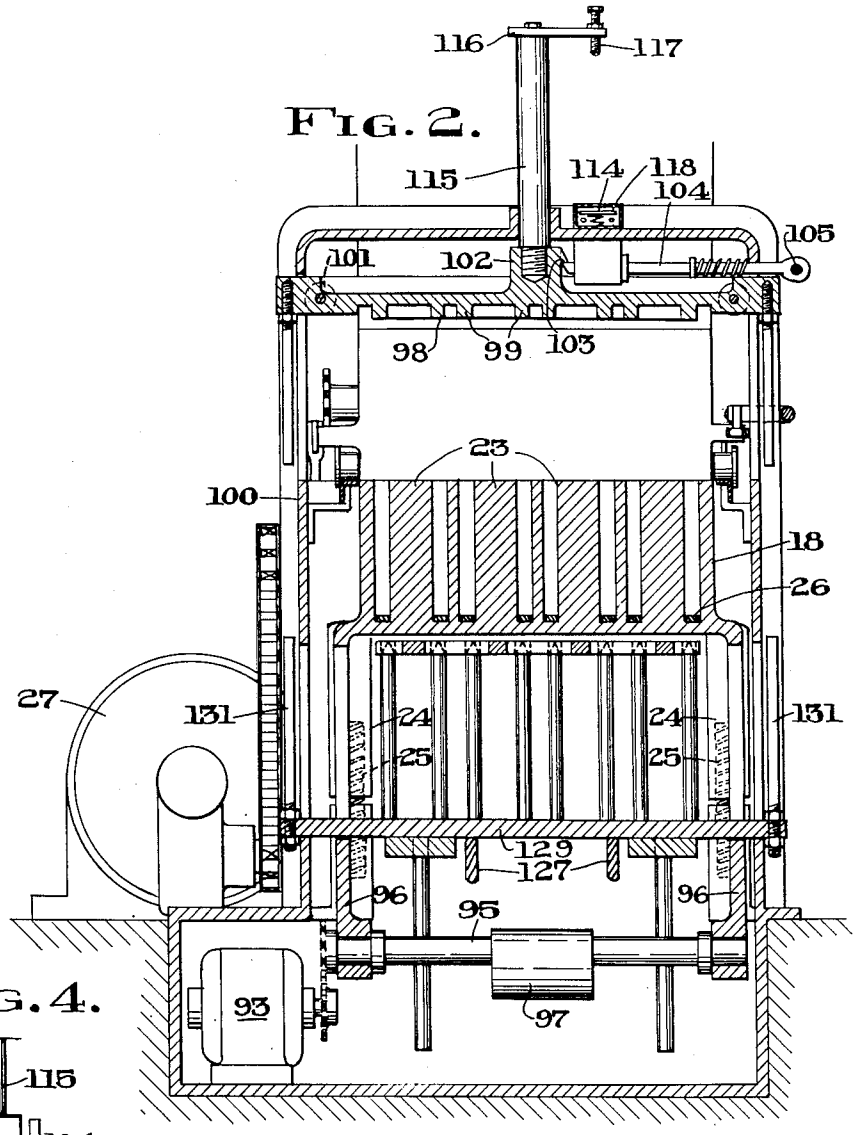

FIG. 4.

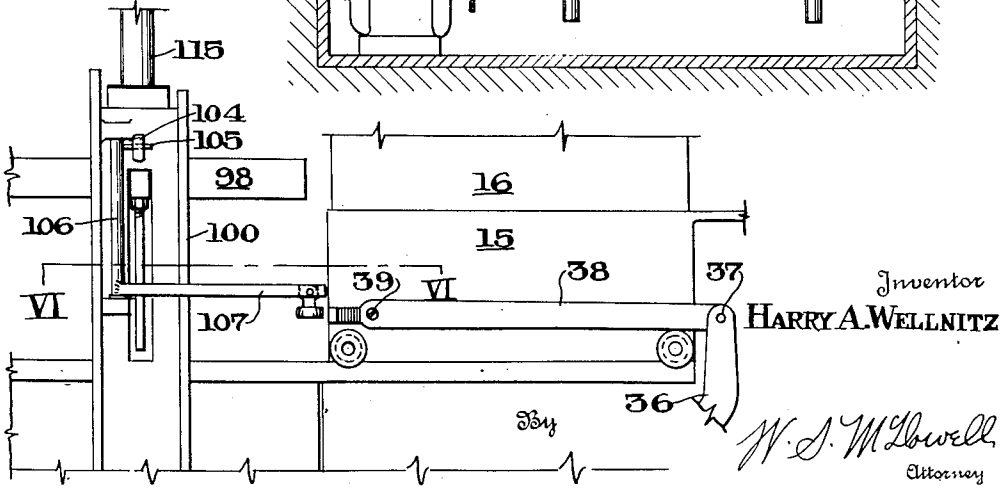

Inventor
HARRY A. WELLNITZ

By W. S. McDowell
Attorney

Jan. 12, 1943. H. A. WELLNITZ 2,308,132

CONCRETE BLOCK-FORMING MACHINE

Filed Jan. 16, 1942 3 Sheets-Sheet 3

FIG. 5.

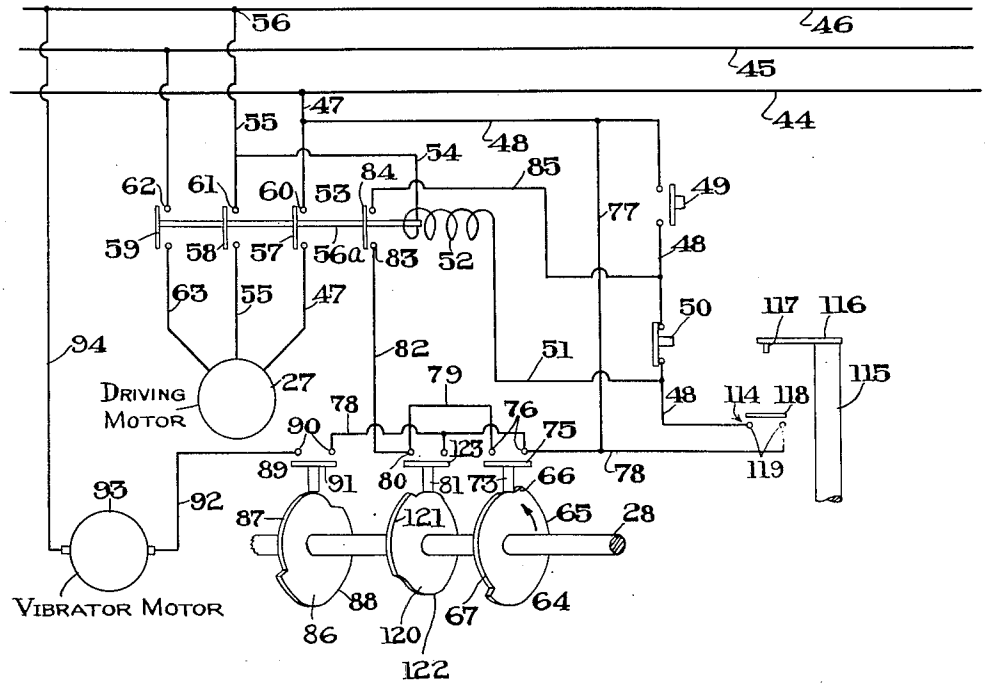

FIG. 6.

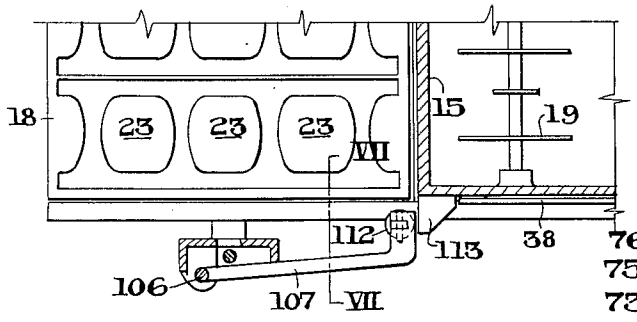

FIG. 8.

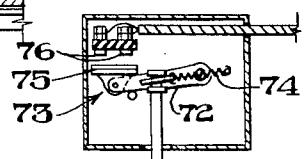

FIG. 7.

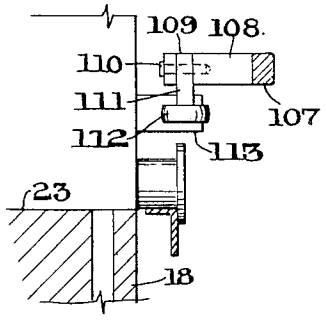

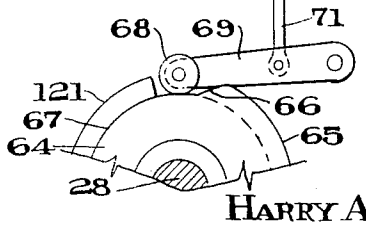

Inventor

HARRY A. WELLNITZ

By W. S. McDowell

Attorney

Patented Jan. 12, 1943 2,308,132

UNITED STATES PATENT OFFICE

2,308,132

CONCRETE BLOCK FORMING MACHINE

Harry A. Wellnitz, Columbus, Ohio

Application January 16, 1942, Serial No. 427,026

8 Claims. (Cl. 25—41)

This invention relates to machines for producing molded products of plastic materials, such as concrete building blocks, wall tiles and other analogous products.

In concrete block-forming machines, particularly machines of the type utilizing a sliding mix transferring and measuring drawer, wherein the drawer is movable between positions of registration with a mix-containing hopper and a spaced mold box and wherein a drop platen is used for effecting final compaction of the mix received within the mold box, some difficulty has been encountered in the matter of causing such a machine to produce formed cementitious blocks of uniform and standard height dimensions. It is obvious that if such blocks vary in height, even though but slightly, difficulties ensue when the blocks are placed in superposed wall-forming courses, since builders base their plans on structures in which the blocks are each assumed to possess a definite height dimension.

Accordingly, it is an object of the present invention to provide improved means in a machine of the character indicated which, when operated at production speeds, will form successive blocks with each block possessing a standard height dimension, avoiding the lack of uniformity in this regard hitherto present.

It is another object of the invention to provide a concrete block-forming machine wherein a switch mechanism is automatically operated by the drop-type platen when the desired degree of compaction of the concrete mix in the mold box is obtained, the switch serving to actuate mechanism by means of which the platen is elevated and the formed block moved to a position adapted for its discharge or removal from the machine.

Another object of the invention is to improve the design and arrangement of a block-forming machine of the type set forth in order to enhance its accuracy in operation, convenience in control and general efficiency.

A further object is to provide such an arrangement of parts and method of operation as will produce an improved product.

Further and other objects and advantages will be hereinafter set forth in the accompanying specification and claims, and shown in the drawings, which by way of illustration show what is now considered to be the preferred embodiment of the invention.

In the drawings:

Fig. 1 is a vertical sectional view taken through a block-forming machine formed in accordance with the present invention;

Fig. 2 is a vertical sectional view on the line II—II of Fig. 1, showing the mold box, drop platen and vibrating mechanisms;

Fig. 3 is a detail elevational view of the rock shaft operating mechanism;

Fig. 4 is a detail side elevational view, showing the sliding mix drawer, the platen frame and the trip mechanism for causing the platen to drop;

Fig. 5 is a diagrammatic view of the drive motor circuits and their control switches;

Fig. 6 is a detail horizontal sectional view taken on the plane indicated by the line VI—VI of Fig. 4;

Fig. 7 is a detail sectional view on the line VII—VII of Fig. 6;

Fig. 8 is a detail vertical sectional view taken through a cam operated switch mechanism disposed in one of the electrical circuits employed to control the operation of the machine.

Referring to the drawings, the numeral 10 designates the stationary base frame of the cementitious block-molding machine forming the present invention. The frame includes a stepped bottom wall 11, upstanding vertical side walls 12, a vertical front wall 13 and a horizontally disposed top wall 14.

Slidably mounted for movement in a confined horizontal and linear path on the top wall 14 is a mix-receiving and transferring drawer 15, the latter being open at the top and bottom. When this drawer is normally positioned, as in Fig. 1, the same is disposed below and in registration with a stationary mix-containing hopper 16. The cementitious mix gravitates from the hopper into the drawer 15, filling the latter with a measured quantity of the mix, the quantity being sufficient to effect the formation of a single block. The drawer 15 is also formed with a horizontally disposed closure shelf 17, which, when the drawer is advanced to its mix-discharging position in registration with a mold box 18, serves to close the bottom of the hopper 16 and thereby prevent loss or spilling of the mix from the outlet of the hopper.

If desired, the mold box may be provided with rotary agitators 19, which are adapted to be driven by a motor 20, suspended from the under side of the shelf 17. These agitators may operate after the manner set forth in my co-pending application, Serial No. 266,584 filed April 7, 1939, now Patent No. 2,270,829, dated January 20, 1942.

The mold box 18 comprises an open topped rectangular frame, which is stationarily posi-

tioned in recesses 21 formed in the upper portions of the side walls 12 toward the front of the machine. Further, the mold box includes a perforated bottom 22, from which arise spaced vertical core members, which are adapted to produce the usual openings in concrete building blocks formed by the mold. The box 18 is formed with downwardly projecting leg extensions 24, which are socketed to receive the upper portions of a plurality of coil springs 25. The lower portions of these springs are received within suitable retaining sockets provided in connection with the base frame 10, the springs 25 serving to produce a resilient supporting medium for the mold box in order to facilitate its vibration. The upper edge portions of the mold box terminate normally approximately evenly with the upper surface of the top wall 14 of the base frame, so that the measuring drawer may be advanced thereover and into exact vertical registration therewith. The mold box is adapted to receive at the bottom thereof a removable pallet 26 on which a cement block is adapted to be formed, the pallet being removable from the mold box after the formation of the block and provides a base for facilitating the handling of the block. When placed in the mold box, the pallet rests on the perforated bottom wall 22 thereof so that the perforations in the wall 22 will be closed or covered.

The drawer 15 is slidably operated at timed intervals by means of an electric drive motor shown at 27. This motor through suitable speed reducing mechanism drives a main control shaft 28, the latter being suitably journaled in bearings provided in connection with the base frame 10. The shaft 28, at one end, (see Fig. 3) has fixed thereto a disk 29, the latter being provided with a multiplicity of spaced circularly arranged apertures 30. Secured to the outer face of the disk by means of bolts 31 passing through the apertures 30 is a tangentially extending rock shaft operating arm 32. Similarly secured to the inner face of the disk 29 is a second rock shaft operating arm 33, which is spaced laterally from the arm 32. A third arm 34 is also secured to the outer face of the disk 29 by means of bolts passing through the apertures 30, the arms 32, 33 and 34 while being carried by the disk 29 are disposed in different vertical operating planes.

A multiplicity of apertures 30 are utilized for the purpose of providing for adjustment in the operating positions of said arms. Journaled in bearings provided in the side walls of the base frame 10 is a rock shaft shown at 35. This shaft has fixed thereto one or more drawer-operating arms 36. To the upper end of each of these arms, there is connected, as at 37, one end of a link 38, which is disposed at the side of the drawer 15, the other or forward end of the link being pivoted as at 39 to said drawer, so that upon the oscillation of the rock shaft 35, sliding motion will be imparted to the mix transfer drawer.

As shown in Fig. 3, when the main shaft 28 is rotated, the tangential arm 32 will first engage with a roller 40 mounted on the outer end of a crank arm 41 fixed to the rock shaft 35. One edge of the arm 32 has wiping engagement with the roller 40, which engagement is sufficient to rock the shaft 35 in a direction causing the advance of the drawer 15 from its material receiving position in registration with the hopper 16 to its material discharging position in registration with the mold box 18. When this movement has been effected, the arm 32 is rotated sufficiently to be removed from engagement with the roller 40, allowing the drawer 15 to remain at rest and in registration with the mold box 18. At this time, the agitators 19 are actuated by the motor 20 so that the plastic mix is positively discharged both by gravity and by operation of the agitators into the mold box, completely filling the latter with the mix. When this has been accomplished, the second arm 33 on the disk 29 is moved into wiping engagement with a roller 42 carried by the outer end of a second crank arm 43 fixed to the shaft 35. This engagement causes the rock shaft to be partially revolved in a direction opposed to that imparted thereto by the operation of the arm 32, and by this means, the drawer 15 is restored to its normal position in registration with the hopper 16.

The operation of the drive motor 27 is controlled by the employment of circuits and ancillary devices disclosed diagrammatically in Fig. 5. In this figure of the drawings, the drive motor has been indicated as being of the three-phase type. The three main conductors are disclosed at 44, 45 and 46. To the conductor 44, there is connected a lead 47 from which extends a conductor 48 which leads to a manually operated starting switch 49. Also included in the conductor 48 is a cut-out or emergency stop switch 50 of a manually operated type. Extending from the conductor 48 on the opposite side of the switch 50 as regards the switch 49 is a lead 51 which extends to the field winding 52 of a solenoid or relay switch 53. From the other side of the winding 52, a lead 54 extends to a conductor 55 which is joined as at 56 to the return conductor 46. Thus, by depressing the switch 49 and closing the circuit therethrough, the field winding 52 will be excited to actuate the armature 56a of the switch 53, bringing the contact disks 57, 58 and 59 thereof into engagement with the normally spaced sets of contacts 60, 61 and 62 which are respectively joined with the motor leads 47, 55 and 63 and united with the main conductors 44, 45 and 46.

This comprises the initial starting circuit and results in the operation of the motor 27 and the main shaft 28. Fixed to the shaft 28 is a plurality of switch operating cams, the first of which is shown at 64. This cam is formed with an extended peripheral portion 65 which terminates in shoulders 66, forming an inset peripheral portion 67. Engaging with the perimeter of the cam 64, as in Fig. 1, is a roller 68 provided on the outer end of an arm 69 which is pivoted as at 70 to the base 10. The central portion of this arm is pivotally connected with the lower end of a link 71, the upper end of the link, as in Fig. 8, having seated engagement with the pivoted snap action lever 72 of a timing switch 73. With the lever 72, there is connected a coil spring 74 which is adapted to impart sharp off-center movement to the lever 72.

It will be seen that when the main shaft 28 is initially rotated by the manual actuation of the switch 49, one of the shoulders 66 of the cam 65 will effect the elevation of the arm 69, the link 71 and the switch lever 72, causing the contact head 75 of the switch 73 to engage and maintain engagement with the normally spaced contacts 76 of the switch 73. This allows current to flow from the conductor 48 through a lead 77, thence to a conductor 78, which extends to one of the contacts 76, the current passing through the head 75 to the second of the contacts 76, thence by way of a shunt lead 79 to one of a pair of contacts 80 found in a switch 81 which corresponds in construction and operation to the switch 73. From

the contact 80, a wire 82 extends to one of a pair of spaced stationary contacts 83 of the relay switch 53, which pair of contacts is bridged, when the winding 52 is excited, by a disk 84, the latter being mounted on the armature 56 and spaced from the disk 57. Current then passes through the disk 84 and thence by way of a lead 85 to the conductor 48, passing through the emergency switch 50, lead 51, field winding 52 of the relay switch, lead 54 and conductor 55 to the trunk conductor 46. By this means, the drive motor 27 is maintained in operation and the switch 49 may be released, since the motor circuit is kept closed by the engagement of the raised portion 65 of the cam 64 with the roller of the arm 69.

The raised peripheral portion 65 of the cam 64 is usually slightly in excess of 180 degrees of the cam periphery and is sufficiently prolonged so that the motor 27 is operated to advance the drawer 15 from its position in registration with the hopper 16 to its position in registration with the mold box 18, allowing for the contents of the drawer to be discharged into the mold box and to then provide for the restoration of the drawer to its normal position in registration with the hopper 16. The roller 69 then engages with the depressed peripheral portion of the cam 64, causing the switch 73 to open and thereby discontinue the operation of the motor 27.

Also, fixed to the shaft 28 is a second timing cam 86, the peripheral portion of which is depressed as at 87 and extended as at 88 for engagement with the actuating arm of a vibrator switch 89. Immediately after the closing of the switch 73 by the action of the cam 64, the cam 86 operates to close the switch 89, causing current to flow from the lead 77, conductor 78 through the spaced contacts 90 of the switch 89 by the engagement of the head 91 of the switch 89 with the contacts 90, and thence by way of the lead 92 to the vibrator motor 93. The return side of the vibrator motor is joined by a conductor 94 with the trunk conductor 46.

The vibrator motor 93, as shown in Figs. 1 and 2, is mounted in the lower part of the base 10 of the machine and is utilized to drive a rotatable shaft 95 journaled in bearings provided in brackets 96 in which the lower ends of the coil springs 25 are mounted. The shaft 95 is equipped with an eccentric 97, so that when the shaft 95 is rotated, vibratory motion is imparted thereto and thence to the mold box, causing the settling of the cementitious mix in the mold box to produce a block of required density. This vibration is continued during the retraction of the filling drawer 15 to its normal position and after the drawer assumes its normal position and comes to rest.

With the drawer retracted, a drop platen, shown at 98, is released and falls on the top of the cementitious mix contained within the mold box to produce further compaction thereof in addition to that obtained by the vibratory action imparted to the mold box. The platen 98 comprises a horizontally disposed plate having its under surface ribbed as at 99 to conform to the configuration of the upper part of the mold box and its core members 23. The outer ends of the platen project through vertical slots provided in a yoke-shaped supporting frame 100. Also, the platen at its ends may be provided with rollers 101 to control its vertical sliding movement. Normally, the platen is maintained in an elevated position by providing the same centrally with an upstanding boss 102, which is shouldered as at 103 for engagement with a spring-pressed slidably mounted rod 104. The outer end of this rod is formed with an eye which receives a finger 105 projecting laterally from a vertically journaled trip bracket 106. The lower end of this bracket is provided with a longitudinally extending arm 107 having an inwardly directed outer end 108 which is slotted as at 109. Pivotally mounted in this slot as at 110 is a stud 111 carrying a horizontally positioned roller 112 at its lower end.

This roller is disposed in registration with a wedge element 113 projecting laterally from the side of the drawer 15. Due to its peculiar pivotal mounting in the outer end of the arm 107, the roller 112 upon forward movement of the drawer toward the mold box merely swings idly about the horizontal pivot 110, so that the position of the arm 107 is not disturbed. However, upon rearward or retracting movement of the drawer 15, the inclined surface of the wedge element 113 engages the roller 112, and since the stud 111 is, by the formation of the slot 109, prevented from swinging about the axis of the pivot 110, the consequence is that the wedge surface of the element 113 forces the roller 112 outwardly and laterally, swinging the arm 107 about its vertical axis and imparting similar movement to the finger 105, which moves the rod 104 and releases said rod from engagement with the shoulder 103 of the platen. Such release allows the platen to fall by its own weight on the mass of cementitious material contained in the mold box, pressing the material down and more firmly compacting the same.

In order to assure the formation of a block having an exact height dimension, the vibration of the mold box is continued while the platen is in engagement therewith, causing the platen to slowly settle as the desired compaction of the cementitious mix takes place. When the block is of the required height dimension, a switch 114 is automatically closed and the elevation of the platen obtained together with the elevation of the cementitious block from the mold proper. Also, vibration is discontinued by the opening of the switch 89 through the engagement of its actuating extremity with the depressed portion 87 of the cam 86.

The actuation of the switch 114 is secured by providing the boss 102 of the platen with a socket in which is received the threaded end of a vertically disposed rod 115. The upper end of this rod carries a fixed horizontal bar 116, and in the outer end of this bar there is mounted an adjustable switch actuating screw 117. When the platen first drops on the cementitious mix in the mold box, the lower end of the screw 117 is spaced from the head 118 of the switch 114. However, as the vibration of the mold continues and the platen slowly settles, the lower end of the screw 117 will, at a desired time, engage with the head 118 to close the switch 114. With the switch 114 closed, see Fig. 5, current passes from the conductor 44, lead 47, conductor 48, lead 77, and conductor 78 to the first of a pair of spaced contacts 119 of the switch 114. The current then passes through the head 118, second contact 119, conductor 48, lead 51, field winding 52 of the relay switch 53, lead 54 and conductor 55 to the return trunk conductor 46. The energizing of the field 52 closes the relay switch 53, starting the motor 27 and rotating the shaft 28.

Fixed on the shaft 28 is a third cam 120, having a raised peripheral portion 121 and a depressed

peripheral portion 122. The raised portion 121 of the cam 22 in relation to the corresponding raised portion 65 of the cam 64 has been indicated in Figs. 1 and 5. This relationship is such that after the switch 73 has been opened, following return of the drawer 15 to its normal position, the motor 27 is stopped. However, the raised portion 121 of the cam 122 then contacts with the operating arm of the switch 81 in order that the head 123 of the switch 81 will be brought into contact with the spaced pair of contacts 80 and a circuit through the switch 81 thereby made possible. This circuit is not immediately established but only takes place when the switch 114 has been closed by the descent of the platen to a predetermined position. It will be understood that the shaft 28 does not rotate unless the motor 27 is in operation. Therefore, the operating arm of the switch 81 remains in a dwell position until the switch 114 is closed. The motor 27 is then energized, as above explained, and the shaft 28 revolved. With the operating arm of the switch 81 engaged with the raised portion 121 of the cam 120, current will flow by way of the lead 47, conductor 48, lead 77, conductor 78 to the contacts 80, passing through the head 123, thence through the wire 82 to the disk 84, lead 85, cut-out switch 50, lead 51, winding 52, lead 54 and conductor 55 to the return trunk conductor 46.

With the switch 81 so closed and the shaft 28 rotating by the operation of the motor 27, the third arm 34 carried by the disk 29 contacts with a pin or roller carried on the outer end of a crank 124 fixed to a second rock shaft 125, which is journaled in the frame of the machine below the rock shaft 35. The rock shaft 125 carries lifting cams 126, which engage with the central portion of a plurality of lift levers 127. These levers are pivoted as at 128 to the frame of the machine and their forward or free ends engage with the under surface of a vertically movable lift bar 129. This bar carries a plurality of upstanding pins 130 which, upon the elevation of the bar, are adapted to pass through the perforations provided therefor in the bottom wall 22 of the mold box, so that the upper ends of the pins may engage with the pallets 26 to effect the elevation of said pallets and the formed blocks carried thereby. Also, the outer ends of the bar 129 carry upstanding posts 131 which, before the pins 130 engage with the pallet 26, contact the lower ends of registering depending posts 132 carried by the platen 98. Due to the wiping engagement of the arm 34 with the crank 124, the rock shaft 125 is revolved sufficiently to cause the elevation of the bar 129, the pallet 26 and the formed cementitious block positioned thereon to a plane above that of the mold box, facilitating the removal of the formed block from the machine. Simultaneously therewith, the platen is elevated until it is again fastened in its elevated position through engagement of its shoulder 103 with the spring-pressed rod 104. At this stage, the raised portion of the cam 121 is rotated beyond the actuating end of the lever for the switch 81, causing the latter switch to open and discontinuing the operation of the motor 27, finishing the complete working cycle of the machine.

The present invention thus provides a drop platen and sliding drawer type of block-forming machine having a high productive capacity, one substantially automatic in operation (except for the manual actuation of the starting switch 49 for each cycle of machine operation) and most especially the provision of automatic means, controlled by the movement of the platen, and the degree of compaction of the block, to regulate the height dimension of the finished block. I prefer to make the cams 64 and 120 separate members in order that their operating positions on the shaft 28 may be relatively varied to obtain adjustment in the periodic operations performed thereby.

The machine is essentially simple in its constructional features, rugged in design and capable of sustained use in the commercial production of concrete blocks and the like.

While I have described a preferred form of my improved machine, nevertheless it will be understood that the same is subject to considerable variation without departing from the scope of the following claims.

What I claim is:

1. In a machine for molding cementitious building blocks, a frame, a mix-containing hopper, a mix-receiving drawer slidably mounted on the frame, a stationary mold box, an electric motor and its actuating circuit, a shaft driven by said motor, means actuated by the rotation of said shaft for moving said drawer between its mix-receiving position in registration with said hopper and a mix-discharging position in registration with said hopper and a mix-discharging position in registration with said mold box, circuit-controlling means for said motor actuated by said shaft for interrupting rotation of the latter when said drawer returns to its mix-receiving position, a horizontally extending vertically moving drop platen slidably carried by said frame, latch means for maintaining said platen in an elevated inactive position during the sliding movement of the drawer, a trip actuated by the return movement of said drawer to its mix-receiving position to release said latch means whereby to cause the platen to drop into forcible engagement with a cementitious block-forming mix positioned in the mold box, a switch for said circuit adapted to be automatically actuated upon predetermined compaction of the mix in the mold box through movement of the platen, the actuation of said switch serving to effect resumed rotation of said shaft, means actuated by said shaft upon its resumed rotation to elevate the formed cementitious block from the mold box, and circuit-controlling means for arresting the rotation of said shaft following the elevation of the formed block.

2. In a machine for molding cementitious building blocks, a mold, means for filling said mold with a cementitious mix, a vertically movable drop platen, an electric motor for operating said mold filling means and said platen, an operating circuit for said motor, and a controller for said circuit operative automatically upon compaction of the mix to a predetermined height dimension within said mold to actuate said circuit, whereby to remove the weight of said platen from engagement with the mix in said mold.

3. In a machine of the class described, an open-topped mold, means for filling said mold with a cementitious block-forming mix, a drop platen movable into compressive engagement with the mix body contained within said mold and with the full weight of the platen sustained by and pressing on said body, and means automatically responsive upon compaction of the mix within said mold to a predetermined height dimension to remove said platen from said compressive engagement with said body.

4. The structure defined in claim 3, in combi-

nation with means for vibrating the mold and the cementitious mix contained therein while the drop platen is pressing on the mix.

5. A building block-forming machine of the type having a mold, means for supplying a cementitious mixture to the mold, means for simultaneously applying pressure to the mixture in mold and vibrating the latter to compact the mixture therein, means for ejecting the formed blocks after compaction, and power driven means for operating the machine; comprising means for interrupting the action of said power driven means during the pressure applying and vibrating operations and means for automatically resuming the action of said power driven means after the block being formed has been compacted to a predetermined height dimension.

6. A machine for molding cementitious building blocks, comprising a frame, a mold supported stationarily by said frame, a drawer slidably supported by said frame for movement between a receiving position in which a cementitious mix is introduced therein and a discharge position in which the drawer is disposed above said mold to release its contents into the latter, an electric drive motor, a primary operating circuit for said motor, a manually operated switch for closing said circuit and energizing said motor, automatic means actuated by the motor when the latter is energized for moving said drawer between its mix-receiving and mix-discharging positions and restoring the drawer to its mix-receiving position, a drop platen mounted in said frame for vertical movement and normally disposed above said mold, latch devices for maintaining said platen in an elevated and active position above said mold, means operative automatically upon return movement of said drawer from its mix-discharging to its mix-receiving position to trip said latch devices and thereby cause gravitational descent of said platen into direct contact with the mix contained in said mold, means for vibrating the mold to cause settling of the mix contained therein, including an electric motor and its operating circuit for effecting automatic actuation of said vibrating means while said mix transfer drawer is in registration with said mold and following retraction of said drawer and while the platen is in contact with the mix contained in the mold, means operated by said drive motor for elevating a formed cementitious block from said mold and lifting said platen into reengagement with said latch devices, a second operating circuit for said driving motor, a switch forming a part of said second operating circuit, and means carried by said platen and engageable with said last-named switch to close automatically said second circuit upon predetermined compaction of the block-forming materials in said mold.

7. A machine for producing molded building blocks of cementitious composition comprising a mold box, a drawer movable into and out of registration with said box to deliver to the latter a moldable cementitious mix, a drive motor, a shaft driven by said motor, means actuated by said shaft for controlling the movement of said drawer between mix-receiving and mix-discharging positions, a primary operating circuit for said drive motor including a manually closeable switch for initiating the operation of said motor, automatic switch means operated by said shaft for deenergizing said circuit following the return of said drawer to its mix-receiving position and the delivery of its contents to said mold, means for vibrating the mold and its contents including an electrical actuating motor and its operating circuit, automatic switch means operated by said shaft for closing the operating circuit of the motor for operating said vibrating means in order to cause vibration of the mold and its contents when the drawer occupies its retracted mix-receiving position, a vertically movable drop platen arranged above said mold box, latch means normally maintaining said platen in its elevated position above said mold box, means operative automatically upon the movement of the drawer from its position of registration with said mold box to its mix-receiving position to trip said latch means and thereby cause said platen to fall into direct contact with the body of the mix undergoing vibration in said mold box, means operated by said drive motor for elevating a formed cementitious block from said mold box and lifting said platen into reengagement with said latch means, a second operating circuit for said drive motor, a switch forming a part of said second circuit and disposed adjacent to said platen, and means carried by said platen and engageable with said last-named switch to close automatically said second circuit upon predetermined compaction of the mix in said mold, whereby to effect automatically the operation of said block elevating means and the restoration of said platen into elevated holding engagement with said latch means.

8. A machine for producing molded building blocks of cementitious composition, comprising a mold, means for filling said mold with a cementitious mix, a vertically movable drop platen adapted to engage and compress the mix contained within said mold, means for vibrating the mix when the latter is subjected to the weight of said platen, an automatic switch means controlled by the degree of compaction of said mix through the joint action of said platen, and vibrating means for removing the platen from engagement with said mix and terminating the operation of said vibrating means.

HARRY A. WELLNITZ.