(19) Europäisches Patentamt
European Patent Office
Office européen des brevets

(11) EP 0 391 570 B1

(12) EUROPEAN PATENT SPECIFICATION

(45) Date of publication and mention of the grant of the patent:
11.09.1996 Bulletin 1996/37

(51) Int. Cl.[6]: **B41J 25/34**, B41J 2/005

(21) Application number: **90302997.3**

(22) Date of filing: **20.03.1990**

(54) Carriage for ink jet printer

Wagen für Tintenstrahldrucker

Chariot pour imprimantes à jet d'encre

(84) Designated Contracting States:
DE FR GB IT

(30) Priority: **04.04.1989 US 333364**

(43) Date of publication of application:
10.10.1990 Bulletin 1990/41

(73) Proprietor: **Hewlett-Packard Company**
Palo Alto, California 94304 (US)

(72) Inventor: **Asakawa, Stuart D.**
San Diego, CA 92129 (US)

(74) Representative: **Colgan, Stephen James et al**
CARPMAELS & RANSFORD
43 Bloomsbury Square
London WC1A 2RA (GB)

(56) References cited:
WO-A-88/04609
US-A- 4 528 576

Note: Within nine months from the publication of the mention of the grant of the European patent, any person may give notice to the European Patent Office of opposition to the European patent granted. Notice of opposition shall be filed in a written reasoned statement. It shall not be deemed to have been filed until the opposition fee has been paid. (Art. 99(1) European Patent Convention).

EP 0 391 570 B1

Printed by Rank Xerox (UK) Business Services
2.13.4/3.4

Description

This invention relates to ink jet printers, and, more particularly, to the mounting arrangement of print heads in such printers.

Printers are devices that print characters onto a printing medium such as a sheet of paper or a polyester film. Printers of many types are available, and are commonly controlled by a computer that supplies the images, in the form of text or figures, that are to be printed.

Some printers use a colorant-containing liquid, which may be an ink or a dye, but is generally termed an "ink" in the printer industry, to form the images on the printing medium. (By contrast, other printers use a dry toner to form the image.) Such printers deliver the colorant to the medium using a print head that creates the proper patterning of colorant to permanently record the image.

One important type of printer is the thermal ink jet printer, which forms small droplets of ink that are ejected toward the printing medium in a pattern of dots that forms the images. When viewed at a distance, the collection of dots form the image in much the same manner that images are formed in newspapers. Ink jet printers are fast, produce high quality printing, and are quiet, because there is no mechanical impact during formation of the image, other than the droplets of colorant striking the printing medium.

Typically, an ink jet printer has a large number of individual colorant-ejection nozzles in a print head, supported in a carriage and oriented in a facing, but spaced-apart, relationship to the printing medium. The carriage and supported print head traverse over the surface of the medium, with the nozzles ejecting droplets of colorant, at appropriate times under command of the computer or other controller, to produce a swath of droplets. The droplets strike the medium and then dry to form "dots" that, when viewed together, form one swath or row of the permanently printed image. The carriage is moved an increment in the direction lateral to the traverse (or, alternatively, the printing medium is advanced), and the carriage again traverses the page with the print head operating to deposit another swath. In this manner, the entire pattern of dots that form the image is progressively deposited by the print head during a number of traverses of the page. To achieve the maximum output rate, the printing is preferably bidirectional, with the print head ejecting colorant during traverses from left-to-right and right-to-left.

Color ink jet printers utilize several, typically four, different print heads mounted in the print carriage to produce both primary and secondary colors. Each of the print heads produces a different color, with four often-used colors being cyan, yellow, black, and magenta. These primary colors are produced by depositing a droplet of the required color onto a dot location. Secondary or shaded colors are formed by depositing multiple droplets of different color inks onto the same dot location, with the overprinting of two or more primary colors producing secondary colors according to well established optical principles.

Good print quality is one of the most important considerations and bases of competition in the ink jet printer industry. Since the image is formed of thousands of individual dots, the quality of the image is ultimately dependent upon the quality of each dot, and the arrangement of the dots on the medium. Because of the fashion in which the printing occurs, the quality of the dots can have a surprisingly large effect upon the final image quality, both for black-and-white and color images. The present invention is directed toward improvement of the image by improvements in the quality of the printed dots in color images.

There can be several sources of degradation of the image in color printing, particularly for the bidirectional printing of secondary colors where each dot is produced by overprinting of two primary colors. There can be a perceived color shift due to the different appearance of a droplet of a first color deposited over a droplet of a second color, as compared with a droplet of the second color deposited over a droplet of a first color. That is, a color 1 on color 2 dot usually has a different shade or tint than a color 2 on a color 1 dot. Another shading problem arises when the first deposited droplet has not dried when the second droplet is deposited, causing an intermixing of colors on the medium that creates yet a third shade of color.

Other sources of reduced image quality arise from more mechanical origins. If the droplets from different print heads are not precisely superimposed when a secondary color is printed, causing an absence of registry, the resulting dot usually has regions of three different tints, one for each of the deposited primary colors and an overlap region of the desired secondary color. Mechanical alignment of the print heads to achieve and retain perfect superposition is difficult, for two reasons. One is that the dots are quite small, on the order of a few thousandths of an inch in diameter, and the tolerances on the print heads themselves and their alignment in the carriage are therefore very tight. Further, the print heads must sometimes be changed, as for example when the print head runs dry of colorant, by the user, a person typically not familiar with alignment procedures. The arrangement for supporting the print heads in the carriage must therefore be self-aligning to a high degree of accuracy, even when the alignment is conducted by an unskilled person. Misalignment of dots also arises from backlash of the printer traversing mechanism, and from a directionality effect when a dot is printed with the print head moving from left to right as compared with right to left. Yet another source of mechanical problems in forming the dots is that the relatively large amount of liquid deposited on one location can be absorbed by the printing medium in such a way that the medium becomes irregularly wavy in the vicinity of the dot when the ink dries, a condition known as "cockle".

W088/04609 describes a multiple cartridge ink jet printer having accurate vertical interpositioning. The printer includes a carriage constructed to traverse a print zone in a predetermined direction and a plurality of print heads removably inserted in the carriage in a row parallel to the said predetermined direction. The carriage includes referencing edges that are substantially parallel to the direction of the carriage traverse, and indexing means for moving supported print heads into precise detent relation with respective referencing surfaces of their carriage unit.

US-A-4528576 describes a printer unit including a carriage having four printer heads of different colors arranged in a row perpendicular or parallel to the direction of traverse of the carriage. The carriage is moved across a recording medium in a reciprocating movement, with the printer heads being driven in combination during the forward movement of the traverse being different from those driven during the reverse movement of the traverse.

Existing color ink jet printers produce images of acceptable quality, and are widely used. However, there is a continuing need for improved ink jet printers wherein the dots forming the images are of a reproducible, high quality that is retained in use in a wide variety of printing conditions even when one or more of the print heads is changed by an unskilled person. The present invention fulfils this need, and further provides related advantages.

The present invention provides a printing unit for an ink jet printer, comprising:

a carriage including support means for receiving and supporting a plurality of print heads for ejecting colorant of different colors onto a printing surface as the carriage moves relative to the printing surface in a traversing direction;
a first print head supported by said support means for printing a first color;
a second print head supported by said support means for printing a second color that is different from said first color, said first print head and said second print head being laterally displaced from each other along the traversing direction; and
a third print head supported by said support means for printing a third color that is different from said first color and said second color, said third print head being displaced from the first print head and the second print head along a medium advance direction that is perpendicular to the traversing direction.

The present invention improves the quality of printed dots in ink jet printers having multiple print heads, such as color ink jet printers. Degradation of the dots due to color shifts, absence of registry, and cockle are reduced significantly. The "overtravel" required to permit all of the print heads to pass over the entire width of the page is reduced, permitting the printing of wider pages on a printer. Alternatively, the area occupied by the printer, its "footprint", may be reduced, so that the printer fits into a smaller available space.

In conventional ink jet printers, the print heads are located in a single row, so that all four of the print heads traverse over a single swath of the printing medium in a single pass. The present approach places at least three print heads in a nonlinear array, so that certain print heads pass over a particular swath of the printing medium in separate traverses.

In the preferred embodiment the invention is used in relation to separate, removable print heads. Preferably, the printing unit for an ink jet printer comprises four colorant ejector plates that eject ink of different colours.

The placement of the print heads in a nonlinear arrangement permits secondary colors to be deposited with less incidence of color shifting. In an illustrative example, the four print heads deposit cyan, yellow, black, and magenta primary colorants. The cyan and yellow print heads are placed into one row, that covers the same swath on the printing medium, and the black and magenta print heads are placed into the other row. In bidirectional printing, the black print head operates first, followed by the magenta print head, during the traverse in the first direction over a particular swath of the printing medium. The printing medium then increments in position so that the yellow and cyan print heads can pass over the same swath printed previously by the black and magenta print heads. The yellow print head and the cyan print head operate in the reverse traverse of the print head over this swath. Thus, printing of a swath requires two traverses of the carriage, with black and magenta deposited on the first traverse over a particular swath of the printing medium, and yellow and cyan deposited on a later traverse. (During the later traverse, the black and magenta print heads usually deposit colorant on yet another swath, so that during any one traverse two swaths are being printed with different sets of colors.)

Color shifts of secondary colors are avoided for two of the three main secondary colors with this approach. Red is produced by depositing a yellow droplet and magenta droplet at the same dot location, and in the arrangement just described the magenta droplet is always deposited first. Blue is produced by depositing a magenta droplet and a cyan droplet, and in this arrangement the magenta droplet is always deposited first. There is no possibility of color shift in bidirectional printing of red and blue, with this arrangement of print heads. Green is produced by depositing a yellow droplet and a cyan droplet at the same dot location, and in this arrangement there can be a color shift in bidirectional printing because yellow would be deposited first for printing in one direction, and cyan would be deposited first for printing in the other direction. Thus, the present approach permits high speed, bidirectional printing while avoiding some, but not all, of the color shifting problems. Even color shifts of green dots can be

avoided by implementation of other printing strategies, as will be described.

The absence of perfect registry of the droplets to produce each dot is reduced in the present arrangement. With prior linear carriages, thermal expansion and additive manufacturing tolerances typically caused the majority of the registry error that might be present. In a preferred embodiment, the print heads are supported in a support plate having four pockets disposed in a rectangular array, each pocket being adapted to receive a removable print head. Each of the four pockets includes a sufficient number of stops to prevent movement or shifting of the cartridge in the plane of the paper, and rotation of the cartridge. Thus, the four print heads are placed close together, minimizing thermal expansion effects that cause misregistry of dots. The four print heads are mechanically located from nearly the same point, as the term "located" is used in the manufacturing industry, reducing errors that otherwise result from the cumulation of tolerances.

The present approach also permits the width of the printer to be reduced, relative to the width required for a linear array of print heads. The minimum width of the printer is determined by the width of the paper to be printed, plus twice the total width of the print heads aligned along the traverse direction, to permit overtravel of the print heads so that all heads can cover the full width of the printing medium. In a conventional printer having four print heads, the minimum width is the paper width plus about eight times the width of a single print head (assuming all print heads have the same width). In the present approach, the minimum width of the printer is the paper width plus about four times the width of a single print head. Thus, the present printer may be made with its width reduced by about four times the width of a single print head, an important advantage in many situations where the user has available only limited desk space.

The present approach permits the printer to be operated with generally the same controller as previously developed for conventional printers, with some slight modifications of programming. However, no major new assemblies are required, and the cost of the printer is equal to or less than that of the conventional printer. Other features and advantages of the present invention will be apparent from the following more detailed description of the preferred embodiment, taken in conjunction with the accompanying drawings, which illustrate, by way of example, the principles of the invention.

BRIEF DESCRIPTION OF THE DRAWINGS

Figure 1 is a perspective view of a thermal ink jet print head;

Figure 2 is a schematic side view of an ejector;

Figure 3 is a plan view of a portion of an ink jet printer;

Figure 4 is an enlargement of the carriage of the printer of Figure 3, illustrating the presently preferred rectangular arrangement of four print heads;

Figure 5 is an enlarged side sectional view of the carriage of the printer of Figure 3, taken along lines 5-5;

Figure 6 is a perspective view of a portion of the print head support of Figure 4;

Figure 7 is a schematic plan view of a support with pockets in a parallelogram arrangement; and

Figure 8 is a schematic plan view of a support with pockets in a trapezoidal arrangement.

DETAILED DESCRIPTION OF THE PREFERRED EMBODIMENT

The process of the present invention is preferably used in conjunction with a thermal ink jet printer, although it is not so restricted. A thermal ink jet printer utilizes a print head that creates and ejects microdroplets of colorant by vaporization of small bubbles of colorant. A thermal ink jet print head assembly 10, used to eject droplets of ink toward a print medium in a precisely controlled manner, is illustrated in Figures 1 and 2. Such a print head is discussed in more detail in US Patent 4,635,073, whose disclosure is incorporated by reference.

The print head 10 includes an ejector 12 having a silicon substrate 14 and a nozzle plate 16. The nozzle plate 16 has a plurality of nozzles 18 therein. Droplets of colorant are ejected from the individual nozzles 18. (As used herein, the term "colorant" means generally a fluid that is deposited upon a printing medium to produce images, which typically includes inks and dyes, and is not restricted in any narrow sense as may be found in the printing arts.)

Referring to the more detailed view of Figure 2, droplets of colorant are ejected through the nozzles 18 by localized heating of the silicon substrate 14 with a heater 20. To effect such heating, the silicon substrate 14 has deposited thereon a plurality of tantalum-aluminum alloy planar resistors 22 with aluminum/copper and gold leads 24, one of the resistors being located adjacent each nozzle 18. An electrical current is passed through the portion of the resistor 22 between the ends of the leads 24, rapidly heating the resistor 22. A small volume of colorant adjacent the resistor 22 is thereby rapidly heated and vaporized, creating a bubble that causes some of the colorant 26 in a reservoir 28 to be ejected through the nozzle 18 to be deposited as a dot 30 on a printing medium 32 (such as paper or polyester). An optional passivation layer 34 overlies the resistor 22, to protect it from corrosion by the colorant and cavitation damage from the collapsing bubble.

Returning to Figure 1, the ejector 12 is mounted in a recess 36 in the top of a central raised portion 38 of a plastic or metal manifold 40. The raised portion has slanted side walls 44. External electrical connection to the leads 24 and thence to the resistors 22 is supplied

through a set of traces 48 on the silicon substrate 14, which connect to a flexible interconnect circuit 50, also sometimes known as a TABcircuit. The circuit 50 fits against the side walls 44, with one end extending to the traces 48 and the other end to external connections to the controllable current source that supplies current to the resistors 22. The general features, structure, and use of such flexible interconnect circuits 50, and their fabrication, are described in US Patent 3,689,991, whose disclosure is incorporated by reference.

Figure 3 illustrates a portion of one type of ink jet printer 60, which can utilize print heads of the type just discussed. The printer 60 includes a pair of facing platens 62 between which a sheet of the printing medium 32 is supported. One or both of the platens 62 are rotatably driven by a stepping motor or DC servo motor 64 that causes them to controllably rotate in either direction. Rotation of the platens 62 advances the printing medium in the selected direction.

A carriage 66, depicted in Figure 3 and in greater detail in Figure 4, is supported above the printing medium 32 on bearings 68 from a pair of rails 70. The carriage 66 slides along the rails 70 under the control of a traversing motor 71 acting through a belt or cable 72 that extends from the motor to the carriage 66. The direction of movement of the carriage 66 along the rail 70 is termed the "traversing direction", indicated by numeral 73. The traversing direction 73 is perpendicular to the direction of the advance of the printing medium through rotation of the platen 62, termed the "advance direction" and indicated by numeral 74.

The print heads 10 are supported in the carriage 66, in a generally facing but spaced apart relationship to the printing medium 32, in the manner illustrated in Figure 5, so that colorant droplets ejected from the ejector 12 strike the printing medium 32. Multiple print heads, or at least multiple ejectors 12, are needed where a variety of colors are to be printed. In the presently preferred practice, four print heads are supported in the carriage 66. Each of the print heads produces colorant droplets of only one color, or a total of four colors, which deposit upon the printing medium 32. However, the possible colors that may be printed are not restricted to those four primary colors. The superposition of droplets of colorant, or the formation of superpixels, can produce intermediate or secondary colors according to well established principles of color formation in reflection or transmission.

More specifically, in the preferred approach the four print heads deposit yellow, cyan, magenta, and black colorant onto the printing medium 32. Dots of these four primary colors are produced by depositing one droplet of the selected color. Dots of secondary colors are produced by depositing droplets of different primary colors overlying each other or adjacent each other. For example, a red dot is produced by depositing a droplet of yellow colorant over a droplet of magenta colorant at the same pixel location, in the case of overlying droplets, or several droplets can be deposited closely adjacent each other, in what is termed a superpixel.

The four print heads 10 are mounted in a support 76 on the carriage 66. As illustrated in various views in Figures 4-6, the support 76 preferably includes a body 78 and four pockets 80 therein. Each print head 10 slides into one of the pockets 80, and is supported therein on a set of stops that contact support pads on the print head. As illustrated in Figure 6, the pocket 80 includes X-stops 82, Y-stops 84, and Z-stops 86. In the preferred approach, the stops 82, 84, and 86 are formed as angled brackets that extend outwardly from the sides of the pocket 80.

The print head 10 has thereon X-support surfaces 88, Y-support surfaces 90, and Z-support surfaces 92, see Figure 1. The support surfaces 88, 90, and 92 are positioned on the print head 10 to contact and cooperate with the corresponding stops 82, 84, and 86, respectively, to support the print head 10 in the pocket 80 at the correct location and height for ejecting colorant onto the printing medium, in the manner illustrated in Figure 5. The contact of the respective surfaces and stops also prevents rotation of the print head 10 about any axis. In short, the print head is held fixed in place by this approach.

The use of stops and support surfaces to position the print head 10 in the pocket 80 improves the accuracy and repeatability of the positioning. In general, when an active element (such as a print head) is mounted in a support structure, there can be a mispositioning of the mounted element due to the deviation of the supporting structure within its manufacturing tolerances. For a consumer product such as a printer, there is a prohibitively high cost of maintaining the entire print head 10 and support 76 within very tight dimension, orientation, and straightness tolerances to minimize mispositioning of the print head 10 and the resulting misregistry of overprinted dots 30 on the printing medium 32.

On the other hand, it is more feasible and less costly to require that only certain limited regions of each structure be maintained within the tight tolerances. In the present case, the position and orientation of the respective facing surfaces of the stops 82, 84, and 86, and the support surfaces 88, 90, and 92, can be more readily maintained within tight manufacturing tolerances so that the print head 10 is precisely positioned in the pocket 80, and so that the resulting printed dots are precisely positioned on the medium 32.

The precise positioning is achievable even by an untrained person who replaces the print head 10, because the replacement operation requires only that the print head 10 be inverted and then lowered into the pocket 80 so that the support surfaces contact their respective stops squarely. One or more clips 94 attached to the support 76 are then engaged to the exposed back surface 96 of the print head 10 to hold it solidly in place within the pocket 80.

This approach to positioning the print head 10 also permits the electrical connections to be readily made. When the print head 10 is in the inverted position as inserted into the pocket 80, the flexible interconnect circuit 50 faces downwardly. The conductors of the circuit 50 extend down the angled side walls 44 to a flat surface 98, which is horizontally and downwardly oriented when the print head 10 is in the inverted position. A corresponding external interconnect 100 extends down a side wall 102 of the pocket 80, and is directed into an outwardly extending shelf 104 so that the electrical traces of the interconnect 100 are horizontally but upwardly oriented. The traces of the two interconnect circuits 50 and 100 are therefore in an opposed facing relationship when the print head 10 is fully inserted into the pocket 80. The interconnect circuits 50 and 100 are designed with such a connection approach in mind, with corresponding traces positioned within the circuits 50 and 100 to permit this connection. The fastening of the clips 94 holds the electrical connections in a firm but releasable make/break contact, permitting easy disconnect when the print head is to be removed. The user of the printer therefore has no separate electrical connections to make.

Figure 4 illustrates the preferred mounting arrangement of the present invention, a rectangular or 2 x 2 arrangement wherein a first pair of print heads 12, indicated by numeral 106, are side-by-side along the traversing direction 73, and a second pair of print heads 12, indicated by numeral 108, are also side-by-side along the traversing direction 73, but displaced from the first pair along the paper advance direction 74. This mounting arrangement is contrasted with the prior approach, wherein all four of the print heads are mounted in a linear arrangement along the traversing direction.

The region of the printing medium 32 over which the print heads pass, and upon which dots are printed, during any one traverse in the traversing direction 73, is termed a "swath". Progressive advancing of the paper in the advance direction 74 after swaths are printed results in coverage of the entire page of the printing medium 32 with the image to be printed.

In the prior linear arrangement of print heads, one swath is printed at a time with colorant being ejected onto the same swath from all of the print heads. This may lead to overprinting color shifts and paper cockle, as previously discussed.

In the present approach illustrated in Figure 4, every other swath is printed during each pass of the print head. The first pair 106 of print heads and the second pair 108 of print heads are spaced apart by one swath width along the advance direction 74. The first pair 106 of print heads pass over a first swath 110 and the second pair 108 of print heads pass over a second swath 112 (which is spaced apart from the first swath 110 by one swath width) during a traverse of the carriage 66 in the traverse direction 73. After that traverse, the advance mechanism operates to advance the printing medium in the direction 74 by the width of one swath, so that the portion of the printing medium previously printed in the first swath moves to an intermediate position between the pairs 106 and 108 of print heads and is not printed upon during the next traverse. Following the next traverse, the advance mechanism again operates to move the printing medium another swath width so that the portion previously printed as the first swath 110 advances to the second swath position, and is printed upon by the second pair 108 of print heads during the next traverse of the carriage 66. The printing buffer memory is programmed to maintain the required printing pattern in order to permit this alternate swath printing approach. The printing of alternate swaths permits the colorant to dry, and also permits a better geometric patterning of the print heads 10. The use of the present invention is not limited to this printing strategy.

For the deposition of primary colors, this mode of printing has no effect on the colors deposited. For the deposition of secondary colors, where one droplet of primary color is deposited upon another droplet of primary color to form the secondary color, there is a significant reduction of both color shifts and dot registry mismatch.

Normally, the first pair of print heads 106 to print on a particular swath are the darker colors, magenta and black in the preferred approach. The second pair of print heads 108 to print on a particular swath are the lighter colors, yellow and cyan in the preferred approach. The darker colors are always deposited first, regardless of whether the traverse is from left to right or right to left. The darker colors are therefore always overprinted by the lighter colors from the second pair of print heads 108, even in bidirectional printing. By contrast, in the prior linear arrangement of print heads, there is no such priority in droplet deposition during bidirectional printing. Consequently, there are routine color shifts when a first color is deposited over a second color, as compared to the situation when the second color is deposited over the first color. Such color shift is particularly troublesome when one of the overprinted colors is a darker color and the other is a lighter color, and such color shifts are completely avoided in the present approach.

An example is useful in illustrating the formation of colors in the present approach. In the preferred approach, the first pair of print heads 106 include the black and magenta print heads, and the second pair of print heads 108 include the yellow and cyan print heads. The primary colors yellow, black, cyan, and magenta are printed with single droplets of the respective colors. The secondary colors are printed with two droplets. Red is printed as magenta overprinted by yellow, green is printed as yellow and cyan, and blue is printed as magenta overprinted by cyan. In this example, red and blue dots will never experience color shifts in bidirectional printing, because the magenta is always deposited first. There can be a color shift in the green dots during bidirectional printing, because both yellow and

cyan print heads are mounted as a pair. During printing in one direction the green dot is formed as a yellow droplet deposited upon a cyan droplet, and during printing in the other direction the green dot is formed as a cyan droplet deposited upon a yellow droplet. However, the color shift for green is less than for other secondary colors, because the green color is composed of two lighter color droplets overdeposited one on the other. The upper droplet tends to be more transparent than if it were a dark color, resulting in a reduced visual impact of the color shift for green, as compared with the potential color shift for other secondary colors.

For check plots where perfect color precision is not required, such color shifts in only one of the colors may be acceptable. For final plots where perfect color is required, the printer can be programmed to print green only in one traversing direction to avoid any color shift at all, but such improvement in color perfection is at the expense of printing speed, because one additional pass of the print head over the printing medium is required for each swath having green dots.

Thus, in the present approach color shifts are avoided as between two of the three main secondary colors, a significant improvement over the prior approach of a linear array of print heads, where color shifts are found in all secondary colors during bidirectional printing. The print heads comprising the first and second pairs are chosen to minimize the apparent visual effect of the color shift of the one color where it is still present. In the example presented, the pairing and placement of the print heads completely avoids color shifts for red and blue, while permitting color shifts for green, where the color shift is expected to be less than for red and blue in any event. Different users of the printer may have different subjective judgments, and different arrangements of the print heads can be used. These judgements may sometimes be reached by the user on the basis of the aesthetics of the image. In other cases, some colors of an image may be dominant to the visual perception, and therefore the arrangement of print heads will be made to avoid color shifts in the dominant colors to the greatest extent possible. As noted, however, a slightly slower printing rate can be used to avoid color shifts entirely.

Color shifts are also reduced in the present approach by reducing the intermixing of liquid droplets. When the first droplet from the first pair of print heads 106 is deposited, it has time to dry and be absorbed into the printing medium before the second droplet from the second pair of print heads 108 is deposited thereover on the next traverse.

The overprinting of dots is mechanically more precise and less likely to be out of registry when the present rectangular configuration of print heads is used, as compared with a linear arrangement of print heads. As shown in Figure 4, the positions of the four print heads are all precisely located only a short distance from a central locating point 114 at the center of the support 76. That is, when the support 76 is machined or otherwise formed, the positioning of the pockets 80 need be highly precise only in the region adjacent the locating point 114, in order for the respective nozzles 18 of the four print heads 10 to be precisely positioned. Using the previously described system of precisely positioned cooperating stops and support surfaces in combination with the central locating concept, highly accurate and reproducible positioning of the print heads 10 is achieved. By contrast, for a linear array of print heads, the entire length of the support must be very precisely fabricated so that the corresponding nozzles 18 are precisely aligned within the required print quality tolerances. Although tight manufacturing tolerances can be achieved with the linear array, requiring such tight tolerances significantly increases the cost of manufacture of the printer.

Another significant source of misregistry error is thermal expansion. If the printer is used at different temperatures, the print head support expands or contracts, causing relative movement of the print heads. The magnitude of the expansion is determined as the coefficient of thermal expansion of the material (assumed to be constant as between the prior approach and the present approach, as the same materials would be used for a fair comparison of the mechanical arrangements) times the initial distance between two points that are to be maintained a fixed distance apart to ensure registry of printed dots. In the present approach of a rectangular array, the distance between two points to be maintained in registry is between the stops of the four pockets, and is relatively small. In a linear array support, the distance for creation of a thermal expansion mismatch is much larger, being the distance between the furthest spaced pockets, resulting in a greater misregistry of the dots due to this source of error.

The support of the present invention is therefore inherently more easy to produce and to maintain in alignment during different conditions of use. The support 76 of the present invention may be made more economically and with a lighter weight, an important consideration because it is moved on the carriage.

The rectangular array of the preferred embodiment permits the width of the printer 60 to be reduced, while retaining the capability for full-width printing of a selected width of printing medium. In any printer, the body of the printer must be wider than the printing medium, so that there is an overtravel length for the print head to traverse past the end of the printing medium to ensure that the entire printing medium is printed. For a linear arrangement of four print heads, the overtravel length must be about eight times the width of each print head, while for a rectangular arrangement of four print heads, the overtravel length need only be about four times the width of each print head. Thus, the width of the "footprint" of the printer on a desk is narrower in the present approach than in the prior approach.

The preferred embodiment is directed toward a rectangular arrangement of print heads, when viewed in a

plan view, as shown in figure 4. However, parallelogram (Figure 7), trapezoid (Figure 8), or other geometric arrangements are possible for particular requirements. Each arrangement has its own advantages. For example, with the rectangular arrangement of Figure 4, it is difficult to place the swaths 110 and 112 exactly next to each other, and it is usually necessary to use a printing strategy wherein intermediate swaths are printed between the swaths 110 and 112, which is the presently preferred approach. With a trapezoidal or parallelogram arrangement of the print heads, the adjacent swaths could be printed next to each other more readily. The rectangular arrangement remains preferred, but the selection of other geometries may be made responsive to particular requirements.

The present invention thus provides a significant advance in the art of color ink jet printers through a rearrangement of the print heads. Although a particular embodiment of the invention has been described in detail for purposes of illustration, various modifications may be made without departing from the scope of the invention, as defined by the appended claims.

Claims

1. A printing unit for an ink jet printer (60), comprising:

   a carriage (66) including support means (76) for receiving and supporting a plurality of print heads (10) for ejecting colorant of different colors onto a printing surface (32) as the carriage (66) moves relative to the printing surface (32) in a traversing direction;
   a first print head (10) supported by said support means (76) for printing a first color;
   a second print head (10) supported by said support means (76) for printing a second color that is different from said first color, said first print head and said second print head (10) being laterally displaced from each other along the traversing direction; and
   a third print head (10) supported by said support means (76) for printing a third color that is different from said first color and said second color, said third print head being displaced from the first print head and the second print head along a medium advance direction that is perpendicular to the traversing direction.

2. The printing unit of claim 1 wherein the plurality of print heads (10) includes a black printing print head and a yellow printing print head which are separated along the medium advance direction.

3. The printing unit of claim 2 wherein the black printing print head is separated from the yellow printing print head by one swath width along the medium advance direction.

4. The printing unit of claims 2 or 3 wherein the black printing print head and yellow printing print head are located such that a print medium encounters the black printing print head prior to encountering the yellow printing print head.

5. The printing unit of claim 1 wherein the plurality of print heads includes four print heads (10), a first pair of the four print heads being in alignment with the traversing direction and a second pair of the four print heads being in alignment with the traversing direction and displaced from the first pair along the medium advance direction.

Patentansprüche

1. Eine Druckeinheit für einen Tintenstrahldrucker (60) mit folgenden Merkmalen:

   einem Wagen (66), der eine Trägereinrichtung (76) zum Aufnehmen und Tragen einer Mehrzahl von Druckköpfen (10) zum Ausstoßen von Färbemitteln unterschiedlicher Farben auf eine Druckoberfläche (32), während sich der Wagen (66) relativ zu der Druckoberfläche (32) in einer Überquerungsrichtung bewegt, aufweist;

   einem ersten Druckkopf (10), der von der Trägereinrichtung (76) getragen wird, zum Drukken einer ersten Farbe;

   einem zweiten Druckkopf (10), der von der Trägereinrichtung (76) getragen wird, zum Drukken einer zweiten Farbe, die sich von der ersten Farbe unterscheidet, wobei der erste Druckkopf und der zweite Druckkopf (10) entlang der Überquerungsrichtung lateral zueinander verschoben sind; und

   einem dritten Druckkopf (10), der von der Trägereinrichtung (76) getragen wird, zum Drukken einer dritten Farbe, die sich von der ersten Farbe und der zweiten Farbe unterscheidet, wobei der dritte Druckkopf entlang einer Medienweiterbewegungsrichtung, die senkrecht zu der Überquerungsrichtung ist, von dem ersten Druckkopf und dem zweiten Druckkopf verschoben ist.

2. Die Druckeinheit gemäß Anspruch 1, bei der die Mehrzahl von Druckköpfen (10) einen schwarzdruckenden Druckkopf und einen gelbdruckenden Druckkopf aufweist, die entlang der Medienweiterbewegungsrichtung getrennt sind.

3. Die Druckeinheit gemäß Anspruch 2, bei der der schwarzdruckende Druckkopf von dem gelbdrukkenden Druckkopf um eine Druckband-Breite ent-

lang der Medienweiterbewegungsrichtung getrennt ist.

4. Die Druckeinheit gemäß Anspruch 2 oder 3, bei der der schwarzdruckende Druckkopf und der gelbdruckende Druckkopf derart positioniert sind, daß ein Druckmedium auf den schwarzdruckenden Druckkopf trifft, bevor es auf den gelbdruckenden Druckkopf trifft.

5. Die Druckeinheit gemäß Anspruch 1, bei der die Mehrzahl von Druckköpfen vier Druckköpfe (10) aufweist, wobei ein erstes Paar der vier Druckköpfe in einer Ausrichtung mit der Überquerungsrichtung ist, und ein zweites Paar der vier Druckköpfe in einer Ausrichtung mit der Überquerungsrichtung ist und entlang der Medienweiterbewegungsrichtung von dem ersten Paar verschoben ist.

Revendications

1. Unité d'impression pour une imprimante à jet d'encre (60), comprenant :

   - un chariot (66) comprenant des moyens de support (76) destinés à recevoir et supporter une pluralité de têtes d'impression (10) pour éjecter un colorant de différentes couleurs sur une surface d'impression (32), lorsque le chariot (66) se déplace par rapport à la surface d'impression (32) dans une direction de translation ;
   - une première tête d'impression (10) supportée par lesdits moyens de support (76) pour imprimer une première couleur ;
   - une deuxième tête d'impression (10) supportée par lesdits moyens de support (76) pour imprimer une deuxième couleur qui est différente de ladite première couleur, ladite première tête d'impression et ladite deuxième tête d'impression (10) étant espacées latéralement l'une de l'autre le long de la direction de translation ; et
   - une troisième tête d'impression (10) supportée par lesdits moyens de support (76) pour imprimer une troisième couleur qui est différente de ladite première couleur et de ladite deuxième couleur, ladite troisième tête d'impression étant espacée de la première tête d'impression et de la deuxième tête d'impression le long d'une direction d'avance du milieu qui est perpendiculaire à la direction de translation.

2. Unité d'impression selon la revendication 1, dans laquelle la pluralité de têtes d'impression (10) comprend une tête d'impression imprimant en noir et une tête d'impression imprimant en jaune qui sont espacées le long de la direction d'avance du milieu.

3. Unité d'impression selon la revendication 2, dans laquelle la tête d'impression imprimant en noir est espacée de la tête d'impression imprimant en jaune d'une largeur d'andain le selon la direction d'avance du milieu.

4. Unité d'impression selon la revendication 2 ou 3, dans laquelle la tête d'impression imprimant en noir et la tête d'impression imprimant en jaune sont positionnées de manière qu'un milieu d'impression rencontre la tête d'impression imprimant en noir avant de rencontrer la tête d'impression imprimant en jaune.

5. Unité d'impression selon la revendication 1, dans laquelle la pluralité de têtes d'impression comprend quatre têtes d'impression (10), une première paire de têtes des quatre têtes d'impression étant en alignement avec la direction de translation et une deuxième paire de têtes des quatre têtes d'impression étant en alignement avec la direction de translation et espacée de la première paire de têtes selon la direction d'avance du milieu.

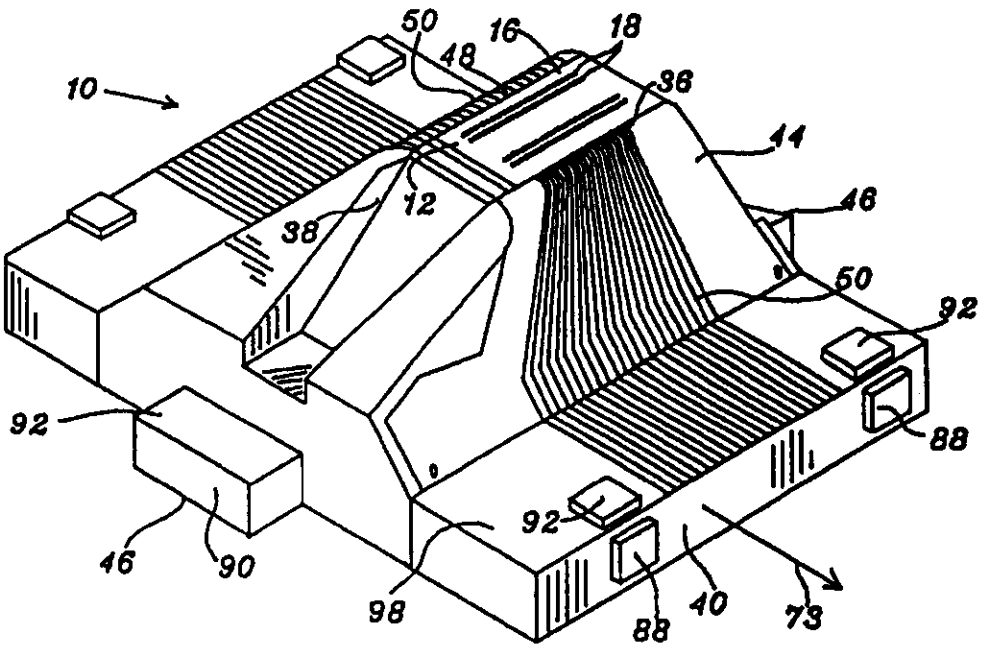
50
16
18
48
10
36
44
12
46
38
50
92
92
88
92
46
90
98
88
40
73

FIG 1

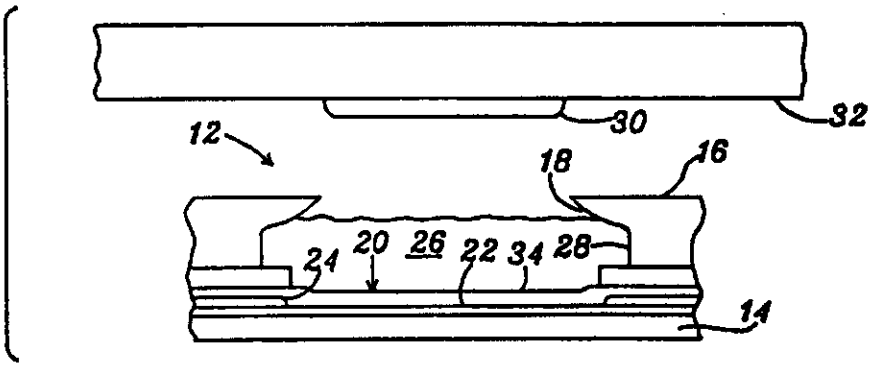
30
32
12
18
16
20
26
22
34
28
24
14

FIG 2

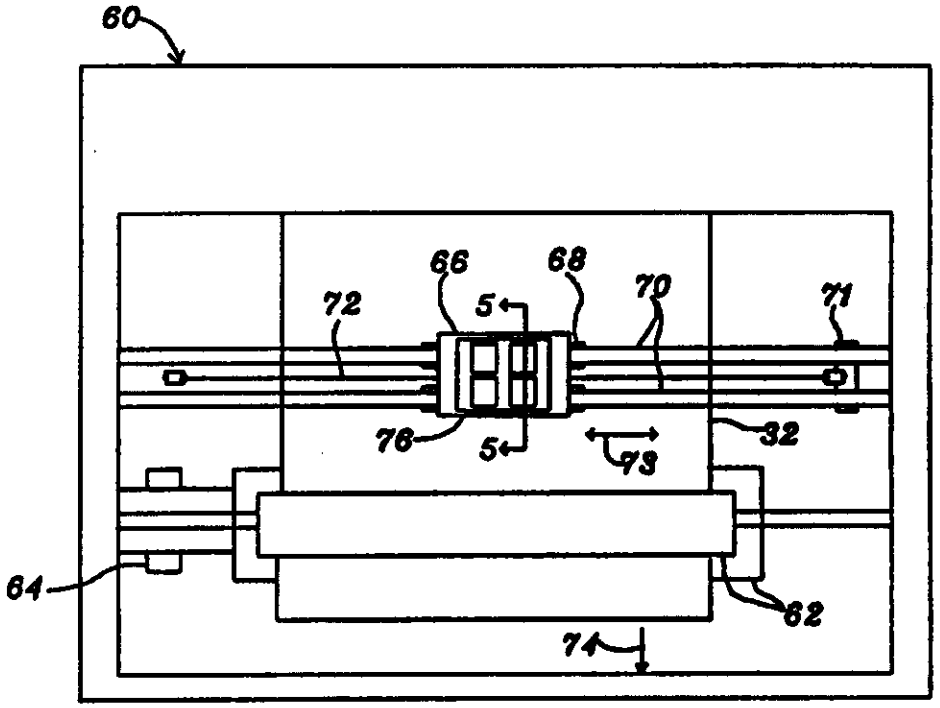

FIG 3

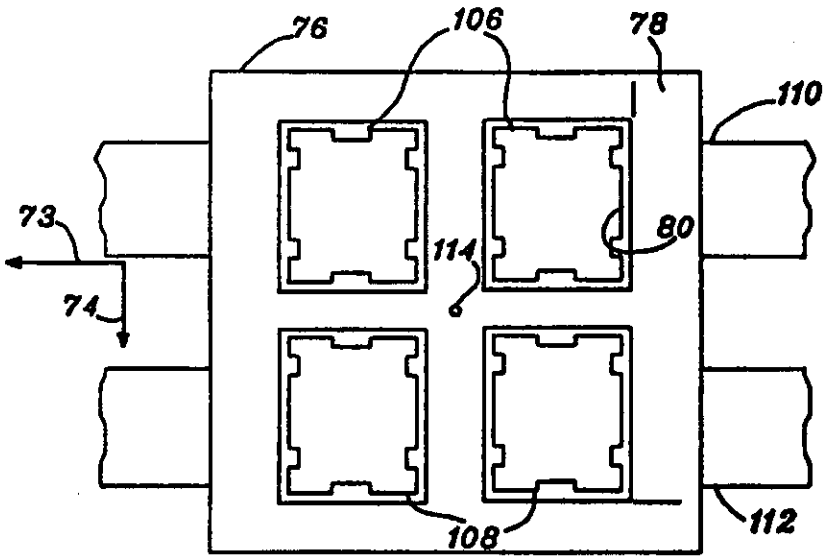
76
106
78
110
73
74
114
80
108
112

FIG 4

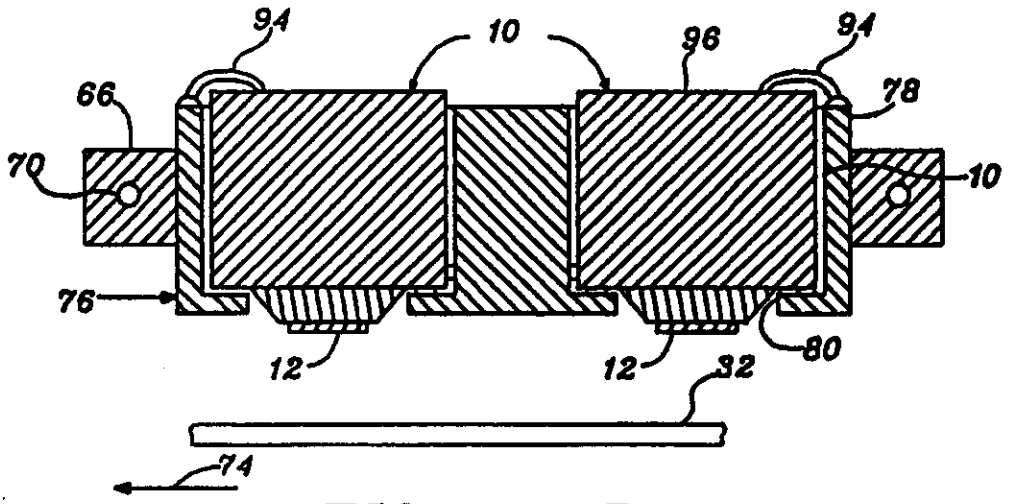
94
10
96
94
66
78
70
10
76
12
12
80
32
74

FIG 5

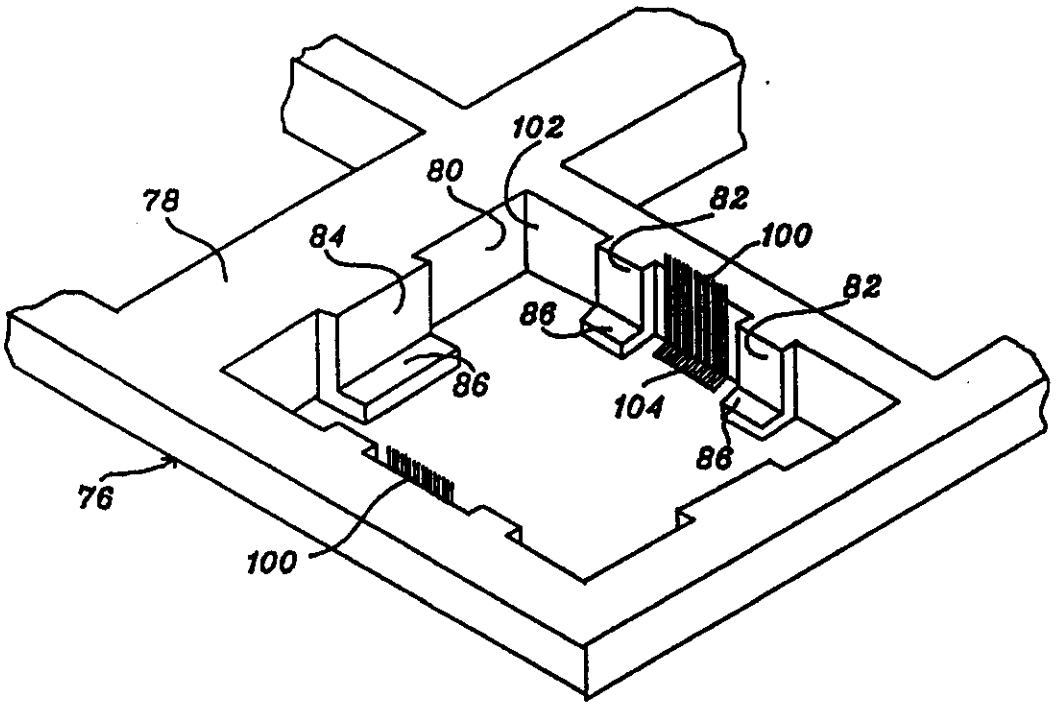

FIG 6

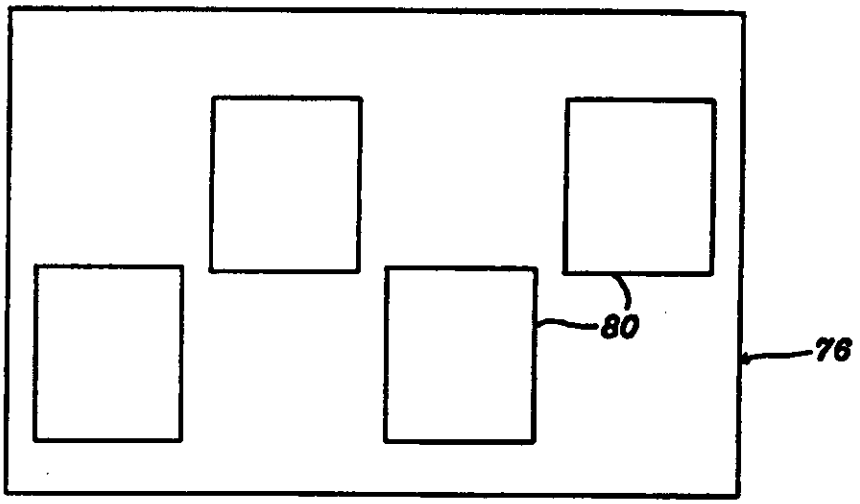

FIG 7

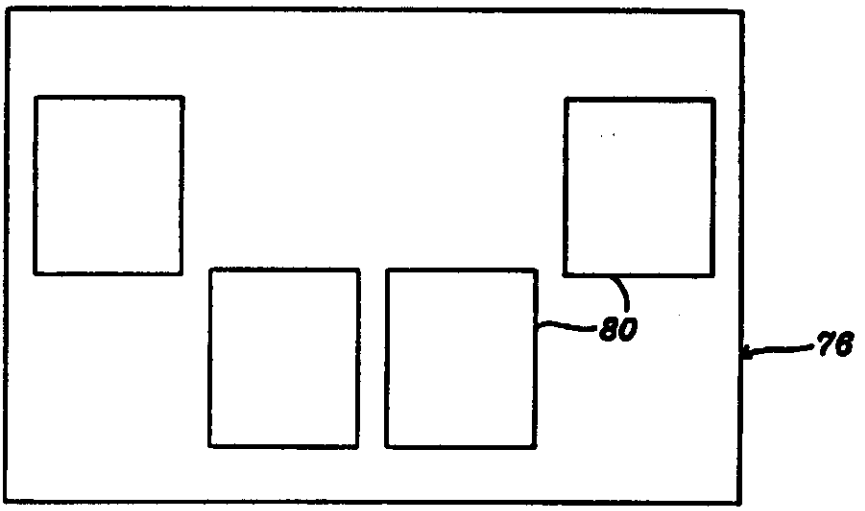

FIG 8

REGISTER ENTRY FOR EP0391570

European Application No EP90302997.3 filing date 20.03.1990

Priority claimed:
04.04.1989 in United States of America - doc: 333364

Designated States DE FR GB IT

Title CARRIAGE FOR INK JET PRINTER.

Applicant/Proprietor
HEWLETT-PACKARD COMPANY, 3000 Hanover Street, Palo Alto California 94304, United States of America [ADP No. 50014570002]

Inventor
STUART D. ASAKAWA, 9919 Azuaga Street, No. 107, San Diego CA 92129, United States of America [ADP No. 57879892001]

Classified to
B41J

Address for Service
CARPMAELS & RANSFORD, 43 Bloomsbury Square, LONDON, WC1A 2RA, United Kingdom [ADP No. 00000083001]

EPO Representative
STEPHEN JAMES COLGAN, CARPMAELS & RANSFORD 43 Bloomsbury Square, London WC1A 2RA, United Kingdom [ADP No. 50906551001]

Publication No EP0391570 dated 10.10.1990
Publication in English

Examination requested 26.03.1992

Patent Granted with effect from 11.09.1996 (Section 25(1)) with title CARRIAGE FOR INK JET PRINTER

23.12.1991 EPO: Search report published on 22.01.1992
Entry Type 25.11 Staff ID. RD06 Auth ID. EPT

09.08.1996 Notification from EPO of change of Applicant/Proprietor details
from
HEWLETT-PACKARD COMPANY, 3000 Hanover Street, Palo Alto California 94304, United States of America [ADP No. 50014570002]
to
HEWLETT-PACKARD COMPANY, Mail Stop 20 B-O, 3000 Hanover Street, Palo Alto, California 94304, United States of America
[ADP No. 50014570001]
Entry Type 25.14 Staff ID. RD06 Auth ID. EPT

**** END OF REGISTER ENTRY ****

RENEWAL DETAILS

PUBLICATION NUMBER EP0391570

PROPRIETOR(S)

Hewlett-Packard Company, Mail Stop 20 B-O, 3000 Hanover Street,
Palo Alto, California 94304, United States of America

DATE FILED 20.03.1990

DATE GRANTED 11.09.1996

DATE NEXT RENEWAL DUE 20.03.1997

DATE NOT IN FORCE

DATE OF LAST RENEWAL

YEAR OF LAST RENEWAL 00

STATUS PATENT IN FORCE

**** END OF REPORT ****