April 21, 1931. A. C. MABEE ET AL 1,802,321

CARBURETOR

Filed Dec. 31, 1923 2 Sheets-Sheet 1

Fig. 1

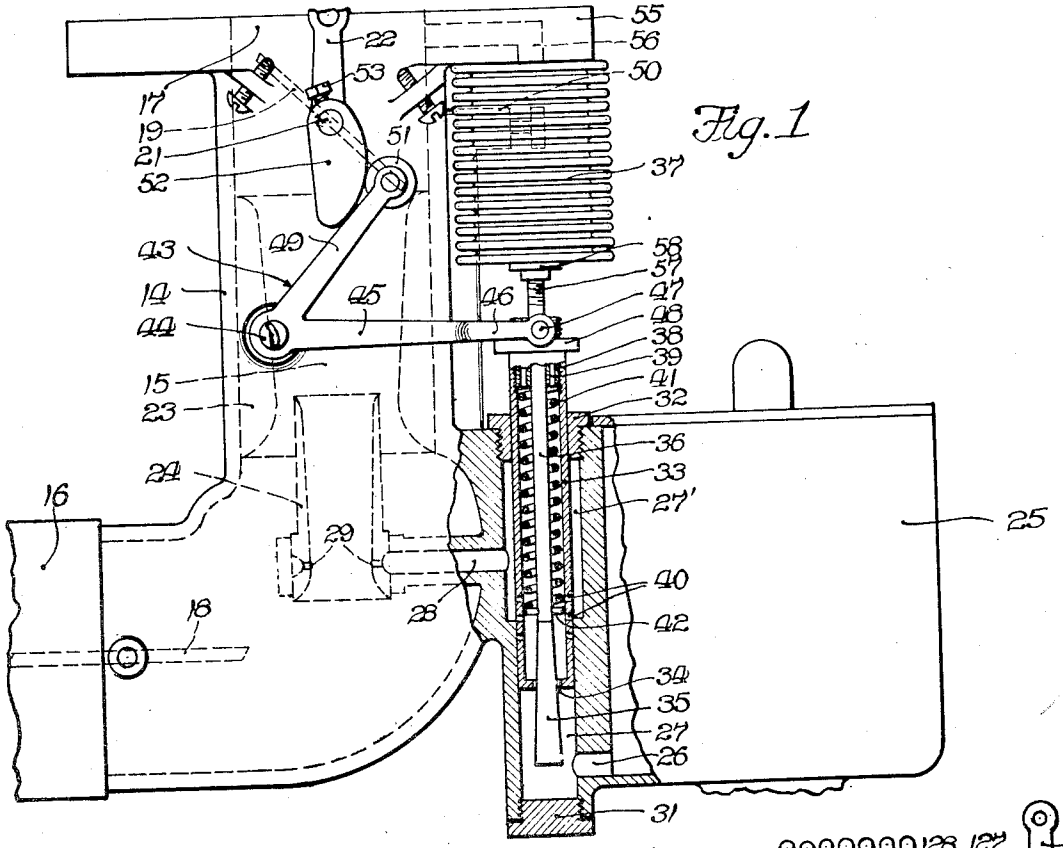

Fig. 2

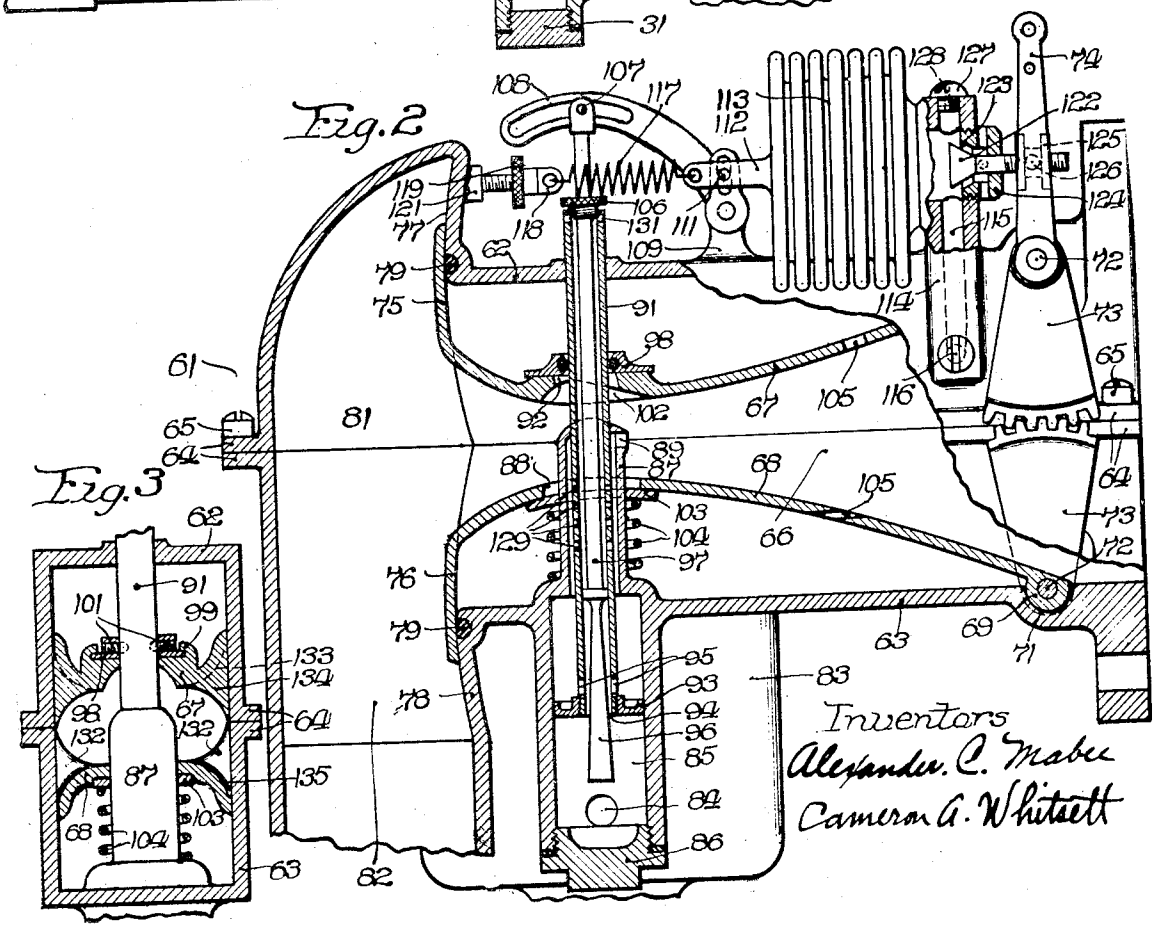

Fig. 3

Inventors
Alexander C. Mabee
Cameron A. Whitsett

April 21, 1931. A. C. MABEE ET AL 1,802,321

CARBURETOR

Filed Dec. 31, 1923 2 Sheets-Sheet 2

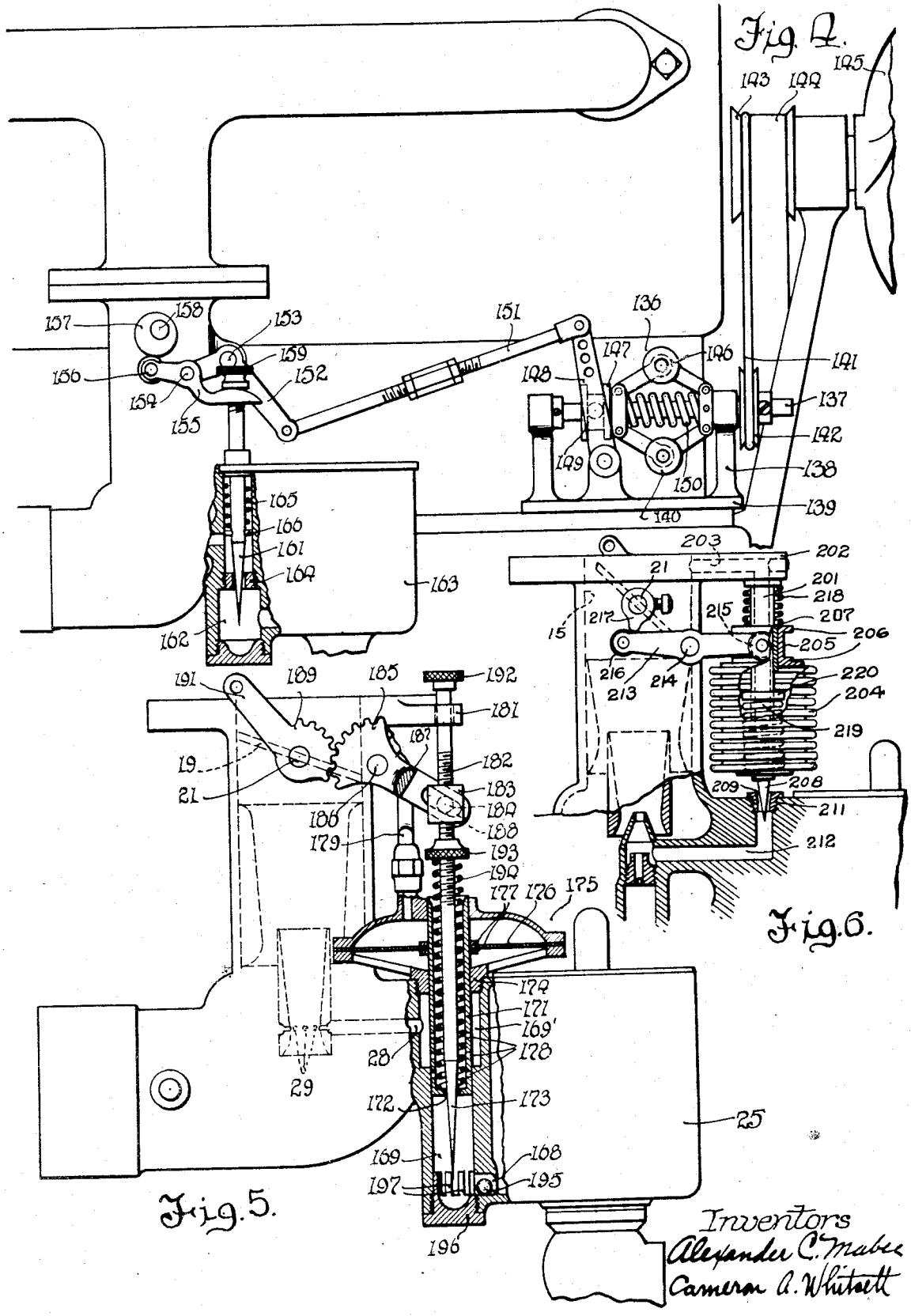

Fig. 5.

Fig. 6.

Inventors
Alexander C. Mabee
Cameron A. Whitsett

Patented Apr. 21, 1931 1,802,321

UNITED STATES PATENT OFFICE

ALEXANDER C. MABEE, OF VILLA PARK, AND CAMERON A. WHITSETT, OF CHICAGO, ILLINOIS; SAID MABEE ASSIGNOR TO MARVEL CARBURETER COMPANY, OF FLINT, MICHIGAN, A CORPORATION OF ILLINOIS

CARBURETOR

Application filed December 31, 1923. Serial No. 683,534.

The present invention relates to carburetors, and more particularly to means for proportioning the mixture ratio.

One of the fundamental objects of the invention is to obtain the highest possible economy in fuel consumption. Heretofore economy has only been obtained by a more or less fixed setting of the fuel regulating part, or, where the economy setting has been subject to a variable control, this control has been the throttle position. Where a more or less fixed setting of the fuel regulating parts is employed, it will be apparent that when a load is encountered where this lean economical mixture is incapable of giving the required power, the temporary restoration of an adequately rich mixture is impracticable because of the fixed setting of the fuel regulating parts. It is furthermore impracticable to put the regulation of this fuel proportion entirely in the hands of the driver, because of his general lack of skill in obtaining a proper setting for maximum economy, and because of the impracticability of a different setting for each momentary load. Because of this, a happy medium must be adopted in the setting given the majority of present day carburetors so that a certain degree of economy will be obtained, but leaving a sufficiently rich mixture to take care of the average load condition. Obviously, the latter prerequisite is always at the expense of economy.

Where the economy setting is subject to throttle control, its arrangement or adjustment is generally such that the throttle will give a fairly economical setting of the fuel regulating parts for the intermediate range of speeds, but will give a considerably richer mixture at approximately wide open throttle. The theory of this is that most driving is done at this intermediate throttle position (corresponding to approximately 20 or 25 miles per hour) and economy at this stage is very saving in fuel consumption; while the requirement for an adequately rich mixture for loads is met by providing a richer mixture for the full open throttle position, so that when a temporary or sustained load is encountered, the desired increase in fuel ratio can be obtained by an opening of the throttle. Obviously, with such arrangement there is no economy obtained when driving under full open throttle, nor under restricted or slow speed throttle position, because the economy setting is confined to the intermediate throttle range. Moreover, an undesired diminution or increase in engine speed must always be corrected by appropriate movement of the throttle.

In the present invention we aim to obtain maximum economy at practically all throttle positions. This we obtain by providing means for proportioning the mixture in accordance with changes in throttle position and with changes in engine speeds. It is well known by those acquainted with the problems of carburetion that throttle position and engine speeds do not bear a fixed or definite relationship to each other under all operating conditions. However, for utmost economy and proper engine performance, it is desirable that the mixture ratio be proportioned to correspond both to throttle position and to engine speeds. For example, in a carburetor in which the economy setting is governed by throttle position, alone, if a greater load is suddenly thrown on the motor while operating under a lean economy setting, the speed of the motor drops off, whereupon the suction which is effective for atomization drops off, poorer atomization is obtained, and manifold condensation increases, with the result that the speed of the motor continues to diminish until corrected by change of throttle position. Mixture proportioning, by throttle control alone, is therefore not adequate. It is one of the principal objects of the present invention to correct the above condition by providing means which will automatically increase the ratio of fuel to air with a decrease in engine speed. Thus, in the above situation the carburetor will feed an increased volume of fuel to the air stream to a degree depending upon the rapidity at which the engine speed falls off. When the engine speed is restored to normal by this temporary enrichment of the mixture, the fuel regulating parts are restored to an economical setting, which setting can be for

an extremely lean mixture because of the action of automatically enriching the mixture with any decrease in engine speed. According to a preferred method of practicing our invention, we first set the throttle at a certain position for predetermining a desired engine speed at which we wish to drive; then using this throttle position as a datum point the fuel flow is regulated to the end of obtaining a high degree of economy for that particular engine speed; and then this rate of fuel flow is automatically increased or decreased directly with any change of engine speed from the predetermined engine speed arrived at by the position of the throttle, so that with a decrease of engine speed the basic flow of fuel is amplified, and for an increase in engine speed this basic flow is decreased. Thus, there is the tendency to automatically maintain the engine speed at a desired point predetermined by the setting of the throttle, with the attendant advantage of permitting a comparatively lean fuel setting for each engine speed. The automatic function of increasing the fuel supply upon a decrease in engine speed at a given throttle position may be a sustained function, which is operative as long as the engine speed remains below its desired value or this automatic enrichment may be a momentary function, operative for a short time period for the purpose of bringing the engine speed back to its desired value. That is to say, the automatic enrichment may be made to continue as long as the engine speed is below the predetermined rate, or the automatic enrichment may be merely momentary for a comparatively short period of time for the purpose of accelerating the engine speed to the desired rate. In the performance of this function the present mechanism operates as an accelerating device, and, in this aspect, our invention embodies improvements in accelerating devices.

Referring to the accompanying drawings illustrating our invention;

Figure 1 is a side elevational view of a carburetor embodying our invention, a part of the structure being broken away to illustrate the metering well;

Fig. 2 is a longitudinal sectional view of a horizontal type of carburetor embodying our invention and employing an expansible venturi for controlling the volume of mixture;

Fig. 3 is a transverse sectional view of a slightly modified construction taken approximately on the plane of the nozzle;

Fig. 4 is a fragmentary side elevational view of an internal combustion engine and carburetor illustrating another method of obtaining our combined throttle position and engine speed control of the mixture proportions;

Fig. 5 is aside elevational view of a vertical type of carburetor illustrating a modified form of control mechanism, and

Fig. 6 is a fragmentary sectional view illustrating one form of the control as applied to the regulation of an air inlet.

In Figure 1 we have illustrated our invention embodied in a plain tube carburetor, although this is not essential. This carburetor comprises a casing 14 defining a carbureting chamber 15 having an air inlet 16 and mixture outlet 17. A choke valve 18, operable from the dash, may be provided in the air inlet 16 for starting and for other conditions where a relatively rich mixture is desired. A throttle valve 19 of the butterfly type, controls the egress of mixture from the mixture outlet 17, this throttle valve being mounted on a throttle shaft 21 extending through the walls of the carburetor casing. An operating lever 22 is mounted on the throttle shaft 21 for connection with the throttle control lever on the steering wheel column. Mounted in the carbureting chamber 15 in an outer Venturi tube 23, and an inner Venturi tube 24 which discharges into the outer Venturi tube at a point slightly beyond the throat of the outer venturi.

Fuel is supplied to the carbureting chamber from a constant level float chamber 25 having the usual float and inlet valve mechanism. From the float chamber 25 the fuel flows through a passageway 26 into a well 27 in the casing. The upper part of the well is counterbored to provide an area of slightly larger diameter, as indicated at 27′, and leading from this enlarged area is a fuel passageway 28 communicating with one or more fuel ports 29 discharging into the throat of the small venturi 24. The lower part of the well 27 is closed by a plug 31, and the upper part of the well is closed by a screw threaded plug 32, which is bored out to function as a snugly fitting guide for a reciprocable sleeve 33. This sleeve is closed at the bottom with the exception of a calibrated port 34 in which is disposed a long tapered metering pin 35. This metering pin is suspended on the end of a rod 36 which passes upwardly and out through the top of the sleeve 33 for connection with the bottom of a sylphon 37. The rod passes through a bushing 38 which screw threads down into the top of the sleeve 33, this bushing having one or more openings 39 around the rod 36. A compression spring 41 is confined between the bushing 38 and any suitable projection carried by the lower part of the rod 36, such as a pin 42 extending through the rod transversely.

Where an air bleed into the fuel supply is desired, the openings 39 are calibrated and are extended entirely through the bushing for admitting atmosphere into the top of the sleeve 33. The fuel passing up into the sleeve 33 has outlet therefrom into the counterbore 27′ through a plurality of ports 40

disposed at different points in the sleeve 33, all below the normal fuel level. As the fuel is drawn out of the sleeve 33 the ports 40 are gradually exposed to the air in the upper part of the sleeve, so that this air is bled into the fuel supply passing to the jets. Such an air bleed may be for better atomization and for compensation. In this embodiment, however, as well as in the succeeding embodiments, the use of an air bleed for compensation is optional as the fuel control effected by the throttle position and by suction secures substantially the proper compensation to offset the tendency to grow rich on high speeds. This may be secured through the proper contour of the cam 52, to be later described.

The carburetor is preferably provided with an idling jet 50 discharging adjacent the lip of the throttle 19, and this idling jet may draw from either the upper or lower port of the well 27 or through an entirely separate fuel passage communicating with the float chamber.

The sleeve 33 is adapted to be thrust upwardly and downwardly in the well 27—27' simultaneously with the motion of the throttle 19 through the instrumentality of a bell crank lever 43. This bell crank lever is pivoted on a pivot screw 44 tapping into the side of the casing 14, and has a long arm 45 which extends substantially horizontally for effecting operative engagement with the sleeve 33. This arm is forked at its end, as indicated at 46, and these forked arms carry inwardly projecting pins 47 which are adapted to bear against the top of a collar 48 projecting from the upper end of the sleeve 33. The other arm 49 of the bell crank lever carries a roller 51 which is adapted to track on the periphery of a cam 52 mounted on the throttle shaft 21. A setscrew 53 permits of the angular adjustment of this cam 52 relative to the throttle 19, or the convenient substitution of cams.

It will be apparent from the foregoing that the pressure of the spring 41 normally tends to force the sleeve 33 upwardly to bring the port 34 to a more constricted area of the metering pin 35, and that this action is controlled by the position of the cam 52 corresponding to the degree of opening of the throttle 19. As the throttle is moved towards an open position, the cam 52 is drawn away from the roller 51, permitting the bell crank arm 45 to swing upwardly and the sleeve 33 to rise to bring the port 34 up to a narrower portion of the metering pin 35. This permits a greater volume of fuel flow into the interior of the sleeve 33, and to the atomizing ports 29, this increased fuel flow corresponding to the proper mixture proportion for the increased opening of the throttle. As the throttle is moved toward closed position, the cam 52 cams the ball crank lever downwardly and forces the sleeve down in the well to bring the port 34 opposite a wider part of the metering pin, for admitting a more restricted flow of fuel to the carbureting chamber, corresponding to the decreased opening of the throttle. It will be apparent that with a given position of the metering pin 35 the rise and fall of the sleeve 33 can be made to proportion the quantity of fuel supplied to the carbureting chamber through any desired gradation. This is the mixture proportioning control exerted by the throttle, and in consequence thereof a basic gradation is obtained relative to which increases or decreases in fuel flow occur corresponding to the variations in suction.

The engine speed or suction control of the mixture proportion is exerted by the sylphon 37 operating through the rod 36 and metering pin 35 to increase or decrease the effective area of the port 34. This sylphon is secured at its top to the under side of a flange 55 extending from the bolting flange of the carburetor. A bore 56 communicates with the interior of the sylphon 37, and, passing horizontally through the flange 55, communicates with the carbureting chamber or mixture outlet at a point above the throttle 19. This connection at a point above the throttle is not essential, but it renders the sylphon more responsive to variations in engine speed. The upper end of the rod 36 is preferably threaded as indicated at 57 for screwing through a collar 58 on the bottom of the sylphon and up into the interior of the sylphon. By screwing the rod 36 up or down in the collar 58, the position of the metering pin 35 can be conveniently adjusted relative to the expansion or contraction of the sylphon. The bushing 38 may also be screwed up or down in the tube 33 by the engagement of a pin wrench in the air inlet hole 39, whereby the initial pressure of the spring 41 can be adjusted through a considerable range. It will be observed that when the sleeve 43 is thrust downwardly, corresponding to restricted position of the throttle 19, the pressure of the spring 41 is increased by reason of the downward movement of the upper abutment 38, whereby an increased tension is placed on the lower end of the sylphon 37 through the rod 36. This increased pressure of the spring compensates for the increased vacuum or suction prevailing above the throttle at this time. Conversely, when the throttle is moved to a wide open position, the pressure of the spring 41 is decreased by reason of the lifting of the sleeve 33, whereby a relatively smaller tension is placed on the lower end of the sylphon 37, corresponding to the reduced vacuum or suction prevailing in the carburetor at that time. Thus the range of expansion and contraction of the sylphon is maintained at a

maximum degree throughout the entire range of engine speeds.

When the engine speed drops off from that which the throttle has selected as the desired speed, the resulting diminution in suction above the throttle will allow the sylphon to expand and the metering pin 35 to lower for increasing the fuel proportion of the mixture. Conversely, an increase in engine speed without change of throttle position will contract the sylphon and reduce the fuel proportion. The sleeve 33 and metering pin 35 are so related that they normally operate to thin out the mixture to a relatively lean proportion, reliance being placed upon the action of the sylphon to enrich the mixture if the motor speed begins to fall off as a result of insufficient fuel supply in the normal mixture. Thus, the sylphon always tends to drop back to a relatively lean mixture for normal running whereby an automatic economizing action is obtained. It will be noted that in starting, the spring 41 will have extended the sylphon and lowered the metering pin 35 for supplying a rich mixture, which will thin out upon starting as the suction contracts the sylphon.

In Figs. 2 and 3 we employ this dual control in an expandible venturi form of carburetor. The housing 61 is constructed of an upper casing section 62 and a lower casing section 63 which join on a horizontal median plane extending through the axis of the carburetor barrel. Both casing sections are formed with external flanges 64 which are secured together by screws 65. The horizontal tubular portions of these casing sections are formed with straight vertical sides, and straight horizontal top and bottom walls, as best shown in Fig. 3. The carbureting chamber 66 is defined between the two side walls of these casing sections, and between upper and lower Venturi leaves 67 and 68. The separated ends of these Venturi leaves are each formed with a cylindrical hub 69 extending across the width of its corresponding casing section in a snugly fitting groove 71, and receiving an operating shaft 72. Each operating shaft is rigidly secured to its respective Venturi leaf, and the outer end of each shaft extends out through the wall of its corresponding casing section and has mounted thereon a sector gear 73. The two sector gears 73 have a closely fitting mesh so as to insure a smooth simultaneous operation of both Venturi leaves. An operating lever 74 extends up from the upper shaft 72 for connection with the usual throttle controls in the driver's compartment.

Both leaves 67 and 68 are of true venturi profile, and these leaves have a snug sliding fit with the side walls of the casing sections 62 and 63. The outer ends of the Venturi leaves are formed with curved flanges 75 and 76 having snug sliding engagement over the two casing walls 77 and 78. Each Venturi flange and its casing wall are curved on an arc struck from the center of the corresponding Venturi shaft 72, so that in the movement of the Venturi leaf the flange 75 or 76 will close off the space intervening between the Venturi leaf and the wall of the corresponding casing section. Beads or strips of resilient packing material 79 may be recessed in the walls 77 and 78 so as to maintain a resilient contact with the flanges 75 and 76 to seal the joint between these flanges and the casing walls. The air inlet 81 formed in the casing sections, anterior to the Venturi leaves 67—68, has connection with a hot air horn or conduit through the tubular air entrance 82 formed in the lower casing section 63. The air inlet chamber 81 may be of greater breadth than the lateral side walls of the carbureting chamber 66 so as to accommodate laterally extending portions on the side edges of the flanges 75 and 76 for overlying the side edges of the carbureting chamber.

A fuel supply chamber 83 having the usual constant level float mechanism therein, is formed integral with the lower casing section 63, and supplies fuel through a passageway 84 into a well 85 depending centrally of the lower casing section 63. This well is closed at its lower end by a removable plug 86, and at its upper end is formed with a nozzle 87 of reduced diameter. The nozzle extends up through a slot 88 in the lower Venturi leaf 68, and has an axially discharging jet orifice 89. A sleeve or tube 91 extends up from the well 85 through an opening in the top of the nozzle 87, and on up through a slot 92 in the upper Venturi leaf and out through the top of the upper casing section 62. The lower end of this sleeve has a piston 93 secured thereto, and the bottom of the sleeve defines a fuel regulating port 94. Fuel entering through the port 94 is discharged through the lateral outlet openings 95 opening into the well area above the piston 93, this upper well area communicating directly with the bottom of the nozzle 87. The fuel flow through the regulating port 94 is governed by the relative position of this port and a tapered metering pin 96 which depends from the end of a rod 97 passing up through the tube and out of the upper end thereof. The vertical position of the fuel regulating port 94 is dependent upon the degree of opening of the Venturi throat; this being obtained by connecting the sleeve 91 to the upper Venturi leaf 67 so that the sleeve will rise and fall with the up and down motion of this Venturi leaf. A plate 98 is mounted for sliding motion on a flat surface on the upper side of the Venturi leaf 67, having its lateral edges guided by overhanging flanges 99 (see Fig. 3) extending from the Venturi leaf. A pair of pins or screws 101 extends

through this plate 98 and engage in recesses in the lateral walls of the sleeve 91 so as to transmit the motion of the Venturi leaf to the sleeve; the aperture in the plate 98 being suitably beveled and packed with a flexible packing ring on the front and rear sides to form a snugly fitting connection around the sleeve 91. The under surface of the Venturi leaf 67 is recessed at 102 to accommodate the rounded upper end of the nozzle 87 when the venturi is constricted. The slotted opening 88 in the other leaf is sealed from the under side by a plate 103 which fits snugly around the cylindrical nozzle 87 and is held up against the slot 88 by a spring 104. The areas in back of the Venturi leaves are connected with the carbureting chamber proper through openings 105 so that substantially the same pressures will prevail upon opposite sides of the Venturi leaves in order to insure their ease of working and security of setting.

The valve rod 97 passes out through a threaded bushing 106 screwing into the top of the sleeve 91, and has pivotal connection at 107 in the slotted end of a bell crank lever 108. This bell crank lever is pivoted on a standard 109 rising from the casing section, and has its other slotted arm pivotally connected at 111 to a stem 112 projecting from a sylphon 113. This sylphon has rigid attachment at its opposite end to a tubular standard 114 rising from the upper casing section. A passageway 115 is cored down through this standard and communicates with the carbureting chamber 66 through the lateral port 116 opening through the side wall of the upper casing section. The passageway 115 communicates with the interior of the sylphon 113 to communicate the carbureting chamber suction, or a measure thereof, to the sylphon. A tension spring 117 is connected to the sylphon stem 112, and at its other end this spring connects through a swiveled eye 118 with a knurled adjusting screw 119. This adjusting screw threads into a boss 121, illustrated in fragment, formed integral with the upper casing section. By threading this adjusting screw 119 in or out the effective tension on the end of the sylphon can be readily adjusted.

The sylphon 113 is intended to raise and lower the metering valve 96 with the rise and fall of suction in the carbureting chamber for a given venturi constriction. In order, however, that the sylphon will not be entirely contracted in closed venturi positions, and entirely expanded on open venturi positions, we propose modulating the suction transmitted to the sylphon in accordance with the degree of venturi opening. One manner of accomplishing this is to employ the tapered valve 122 for regulating the entrance of atmospheric air through a tapered valve port 123 in a removable valve plug 124. The stem of the valve 122 extends out through the back of the plug 124 and is threaded for the reception of a knurled spool-like collar 125 which screws over the threaded end of the valve stem. The operating lever 74 is preferably forked in its intermediate portion, and extending from the fork arms of this lever are two pins 126 which play in the grooved periphery of the collar 125. Thus, with the opening and closing of the Venturi throat the atmospheric port 123 will be closed or opened simultaneously to vent a lesser or greater amount of atmosphere into the sylphon and thereby compensate for the changed restriction at the Venturi throat. That is to say, with an increase of opening at the Venturi throat the atmospheric port 123 would be reduced, or possibly even closed, so that the relatively feeble suction would be still capable of exercising a wide range of control over the sylphon 113; and with a relatively small opening of the Venturi throat this atmospheric port 123 would be opened proportionately further so that the relatively higher suction would be air bled in order that the sylphon be capable of exercising this same range of control during this position of the venturi. A screw plug 127 closes the upper end of the bore 115, and if desired, this plug may have a relatively small fixed atmospheric inlet 128.

The setting of the venturi for a desired engine speed raises or lowers the fuel regulating port 94 relative to the metering valve 96 for admitting a predetermined quantity of fuel proper to that engine speed. The suction corresponding to this engine speed leaves the sylphon 113 at an intermediate degree of flexure, owing to the compensating action of the atmospheric valve 122. Any falling off of the engine speed with this setting of the venturi will be accompanied by a diminished suction in the carbureting chamber which will act to permit a slight expansion of sylphon 113, which in turn will actuate the metering valve 96 to permit a greater fuel flow to the nozzle orifice 89; and vice versa for an undesirable increase in engine speed.

A positive accelerating action is obtained through the provision of the piston 93 and the relatively large area of the well 85. Any opening of the Venturi throat draws the piston 93 upwardly, thereby trapping such gasoline as is contained above the piston and forcing this gasoline up through the nozzle 87 and out of the nozzle orifice.

If desired, an air bled compensating action may be obtained to overcome the inherent tendency of the nozzle to grow rich. This is obtained by providing a plurality of air venting ports 129 at different points along the portion of sleeve 91 disposed within the nozzle 87. Atmosphere is admitted into the upper end of the sleeve through lateral ports 131 which may be regulated in size, or en-

tirely closed, by screwing the threaded bushing 106 up or down in the sleeve 91.

In the simpler construction of the Venturi leaves 67 and 68 these leaves are formed substantially flat across the inner throat surfaces so as to increase or decrease the throat opening only in the horizontal plane of the nozzle orifice 89. As an alternative construction, however, we also contemplate designing these Venturi leaves so that the Venturi throat will be constricted laterally with closing motion of the Venturi leaves toward the sides of the nozzle. Such an alternative construction is illustrated in Figure 3, and comprises upturned ribs or humps 132 on the lower Venturi leaf adapted to take into correspondingly formed recesses 133 in the upper Venturi leaf. Similarly the upper Venturi leaf may be formed with duplicate curved ribs or humps 134 adapted to gradually mesh into correspondingly formed recesses 135 formed in the lower Venturi leaf. As the two Venturi leaves are moved together these ribs and recesses mesh, beginning at the lateral side walls of the chamber and continuing inwardly towards the center, so that the effective area of the Venturi throat is gradually reduced in a vertical plane as well as in a horizontal plane. This converges the air stream, particularly at idling, directly around the end of the nozzle 87, so that this air stream will exert a maximum aspirating effect on the nozzle orifice 89. It will be noted that by virtue of the expansible venturi the necessity of an idling jet and its numerous parts is avoided, and there is also avoided the lean transitional stage in passing from idling jet operation to main jet operation, so characteristic of throttle carburetors.

In Figure 4 the speed component of the regulating function is obtained through the use of a fly-ball governor or any other equivalent speed determining means. Such a governor is conventionally represented at 136 and comprises a governor shaft 137 mounted in pedestal bearings 138 rising from a base plate 139. This base plate may be bolted to the engine block in any suitable manner. As illustrative of one method of driving this governor, a narrow belt 141 may be extended up from a pulley 142 on the governor shaft over the pulley 143 which receives the belt 144 for driving the radiator fan 145. The governor weights 146 are supported at the pivots of any usual arrangement of toggle links, the movable ends of which links have pivotal connection with a sliding collar 147. A forked lever 148 has pins 149 bearing in this grooved collar, and the upper end of this lever has connection through an operating rod 151 with a bell crank lever 152 pivoted at 153 on the carburetor casting. The short arm of this bell crank lever carries a pin 154 which functions as the pivot for a fuel regulating lever 155. One end of this lever 155 pivotally supports a roller 156 which tracks on an eccentric or cam 157 rotating with the throttle shaft 158. The other end of this lever 155 is forked to engage under a knurled nut 159 which screws down over the cam of the fuel regulating needle valve 161.

The needle valve 161 operates in a well 162 located intermediate the constant level float chamber 163 and the fuel nozzle (not shown) which discharges into the carbureting chamber. A plug 164 having a calibrated port is screwed into this well, and the needle valve 161 operates to control the effective area of this port. A spring 165 in the upper end of the well bears against a pin 166 carried by the needle valve and normally tends to seat the valve.

In the operation of this embodiment, as the throttle is opened, the eccentric 157 depresses the roller 156 and rocks the lever 155 to raise the needle valve 161 in order to admit a commensurately greater volume of fuel to the nozzle. Conversely, when the throttle is moved towards closed position, the roller 156 is permitted to ascend against a smaller radius of the eccentric under the pressure of the spring 165 so that the needle valve is moved down to a more restricting position. With any of these throttle positions, if the engine speed accelerates beyond a desirable point, the fly ball governor 136 will swing the lever 148, thereby drawing the rod 151 and oscillating the pivot 154 downwardly so as to permit descent of the right-hand end of the lever 155 and thereby lower the needle valve 161. Conversely, if the engine speed falls off undesirably, the pressure of the spring 150 of the fly ball governor is operative to swing the lever 148 to the left and rock the pivot 154 upwardly, thereby raising the needle valve 161 and admitting a larger proportion of fuel. The setting given the throttle operates through the eccentric 157 and roller 156 to either raise or lower the needle valve, depending upon the movement of the throttle, and thus both the throttle position and engine speed factors on the mixture proportioning control are represented in the rise and fall of the needle valve 161.

In Fig. 5, we have illustrated a construction slightly modified from that shown in Fig. 1. In this form a diaphragm is employed as the actuating element responsive to manifold suction. Fuel is fed from the float chamber 25 through the port 168 into a well 169. The upper part of the well is counterbored at 169′, and this counterbored connection communicates with the main fuel jets 29 through a passageway 28. Sliding in the well 169—169′ is a sleeve 171 having a fuel regulating port 172 at its lower end. This fuel regulating port is controlled by the relative position between the port and a long tapered needle valve 173. The sleeve 171 passes up through

the threaded boss 174 of a diaphragm chamber 175. The lower half of the diaphragm chamber is of spider construction, or has a series of holes therein for admitting atmosphere to the under side of the diaphragm 176. The sleeve 171 is rigidly secured to the diaphragm 176 by two rings 177 which attach to the sleeve in any suitable manner. The upper end of the sleeve passes out through a snugly fitting opening in the top of the diaphragm chamber, and the top of the sleeve is preferably opened for admitting atmosphere down to the air bleed ports 178. The upper part of this diaphragm chamber communicates with the carbureting chamber at a point preferably posterior to the throttle 19 through a conduit 179.

The stem of the needle valve 173 extends out through the top of the sleeve 171 and is guided at its upper end for sliding motion through an apertured guiding arm 181. This outer part of the needle valve shank is threaded, as indicated at 182, and screwing over this thread is a block 183 having two laterally projecting pivot pins 184. A sector gear 185 is mounted on a fixed pivot 186 secured to the carburetor casing. The other part of this sector gear is extended back and is forked as shown at 187 to embrace the sides of the block 183, the pivot pins 184 being inserted through slots 188 in the side arms of the fork. The sector gear 185 meshes with a corresponding sector gear 189 secured fast to the throttle shaft 21. The operating lever 191 extends from the sector gear 189.

A knurled head 192 on the upper end of the needle valve stem 173 permits this needle valve to be rotated in the block 183 for screwing the needle valve up or down in the port 172 relative to a given position of the throttle 19. The collar 193 screws on the threaded portion of the needle valve stem, and this collar serves as an adjustable abutment for the upper end of a compression spring 194 extending down into and bearing against the bottom of the sleeve 171. As a result of this arrangement, any change of setting in the position of the throttle and the position of the needle valve 173 will be accompanied by a change of pressure of the spring 194 so as to compensate for the greater or lesser suction to which the diaphragm 176 will be subjected. As in the embodiment shown in Fig. 1, the rise and fall of the needle valve 173 is responsive to the change of position of the throttle, and the rise and fall of the sleeve 171 is responsive to the change of suction in the intake manifold.

An additional accelerating feature may be associated with the sleeve 171. When the throttle is suddenly opened, the sleeve will move through a sudden drop, owing to the sharp diminution of manifold suction, and this sudden downward motion of the sleeve can be employed for trapping fuel in the lower end of the well 169. To this end, we contemplate employing a ball check 195, or any other suitable one-way valve in the passageway or port 168, which will automatically seat and prevent the return flow of fuel into the float chamber during this sharp descent of the sleeve 171. The lower end of the well 169 is closed by a plug 196, and this plug may have a plurality of spaced fingers 197 which will extend up across the fuel passageway 168 to retain the ball therein when the plug is screwed home. Any downward movement of the sleeve 171, whether sudden or gradual, will trap the fuel in the lower part of the well 169 and force this fuel up through the regulating port 172, where it will be fed immediately to the jets 29.

In Fig. 6 we have illustrated means whereby the throttle position and the suction may be made to control an air vent into the fuel nozzle or jet, and thereby control the proportion of the mixture. A stationary tube 201 is secured in an extension 202 of the bolting flange, and has communication at its upper end with the carbureting chamber 15 through the inwardly extending bore 203. Mounted for reciprocation on this tube 201 is a sylphon 204 having a tubular neck formed at its upper end provided with collars 206. The tube 201 extends down through the tubular neck 205 and terminates in the interior of the sylphon 204. The tube 201 conducts the suction prevailing above the throttle to the interior of the sylphon 204, and to prevent any leakage of air in between the tube 201 and reduced neck 205, a packing is preferably interposed therebetween, such as a fiber sleeve 207, or even an adjustable packing.

The lower end of the sylphon carries a metering valve 208 which controls an air inlet port 209 opening into the carburetor. This air inlet port 209 may be formed in a threaded plug 211, so that the normal height of the port opening can be adjusted relative to the valve 208 by screwing this plug 211 up or down in the carburetor casting. The admission of air through the port 209 may be made to control the mixture proportion in various ways. For example, it may be employed to lean out the mixture without directly affecting the main fuel nozzle, or it may be vented into the fuel stream flowing up through the fuel nozzle, or it may be the air admitted to an air bled accelerating well. We prefer to vent this air into the fuel stream flowing through the nozzle, so that this air will exercise a direct controlling effect on the volume of fuel discharged. Accordingly, we have extended a passageway 212 from the port 209 into the side of the main fuel nozzle at a point below the normal fuel level.

The sylphon 204 is raised and lowered in its entirety in accordance with change of throttle position through the instrumentality

of a lever 213. This lever is pivoted on a pivot screw 214 carried by the carburetor casting, and is provided with a forked outer end having pins or rollers 215 engaging between the collars 206. The other end of the lever 213 carries a roller 216 which tracks on a cam 217 rigidly mounted on the outer end of the throttle shaft 21. A compression spring 218 is preferably interposed between the upper collar 206 and the carburetor flange 202 to assist the weight of the sylphon 204 in compelling the roller 216 to closely follow the contour of the cam 217. The contour of the cam can be shaped to secure practically any desired mixture ratio for any throttle position. In the design shown, the cam will reduce the supply of air vented through the port 209 in idling and restricted throttle position to provide a relatively rich mixture at this time. As the throttle is opened further to average running speed, the high spot in the cam will increase the volume of air being vented through the port 209 and result in a diminished proportion of fuel, in order to obtain the highly sought economy in this driving range. As the throttle is moved towards full open position, where greater power is desired, the following low spot in the cam will result in the restriction of the port 209 so that a richer proportion of fuel will be supplied in this throttle position.

The taper of the valve 208, the arms of the lever 213, and the contour of the cam 217 are all proportioned to secure the foregoing action if the engine speed properly follows the throttle in each of its different positions. The expansion and contraction of the sylphon 204 will, with each change of throttle position, have been allowed for in this proportioning of the parts. However, if the engine suction does not correspondingly follow the change in throttle position, the sylphon 204 will be influenced to increase or decrease the mixture proportion. For example, if after the throttle has been moved to an intermediate running speed of, say 25 miles per hour, the engine speed should begin to fall off with no change in throttle position, the resulting diminution of vacuum above the throttle would permit the expansion of the sylphon 204, whereby the diluting volume of air being vented through the port 209 would be reduced and the fuel proportion increased for bringing the engine back to speed. Conversely, if the engine speed should accelerate unduly without change of throttle position, the higher suction above the throttle would contract the sylphon 204 and dilute the mixture for reducing its speed.

A spring 219 may be interposed between a collar 220 on the tube 201 and the bottom of the sylphon 204 to prevent too wide a range of deflection of the sylphon under the changes in suction occurring above the throttle. Obviously, the cam 217 may be shaped with an entirely different contour to provide a lean mixture at all speeds, relying upon the sylphon 204 to enrich the mixture if the engine should falter, or the cam may be designed to give rich and lean proportions at any points in the over-all range of speeds of the engine.

The several modifications illustrated are only indicative of the large number of methods of carrying the invention into effect. They are all different manifestations of the one generic invention. The appended claims have been drawn to the end of covering these various methods of effecting the one common invention, and such others as would naturally occur to one skilled in the art from the present disclosure.

We claim:—

1. In carbureting apparatus, the combination of a mixture passageway having an inlet for the main air supply and having a mixture outlet, a throttle controlling the flow of mixture therethrough, means for supplying liquid fuel to said mixture passageway, a pair of valve members relatively movable for controlling the supply of said fuel, means for actuating one of said valve members with change in throttle position, and automatic means for actuating the other of said valve members with change of suction independently of change of throttle position, and without affecting the main air supply.

2. In carbureting apparatus, the combination of a mixture passageway having an inlet for the main air supply and having a mixture outlet, a throttle for controlling the flow of mixture therethrough, means for supplying liquid fuel to said mixture passageway, a pair of valve members relatively movable for controlling the supply of said fuel, means for actuating one of said valve members with change of throttle position, means for actuating the other of said valve members with change of suction, said latter means responding to change of suction without influencing the main air supply, a spring acting on said suction responsive means, and means for varying the pressure of said spring acting on said suction responsive means upon change of position of said throttle responsive means.

3. In a carburetor, the combination of a carbureting chamber having an inlet for the main air supply and having a mixture outlet, a throttle controlling the flow through said chamber, fuel supply means, and mixture proportion regulating mechanism comprising a passageway controlled by two valve elements, one of said elements having a hole and the other of said elements comprising a member adapted to vary the flow through said hole for controlling the flow through said passageway, controlling means responsive to throttle position for moving one of said valve elements, controlling means re-

sponsive to suction for moving the other of said valve elements, said latter controlling means performing said valve control movement without influencing the main air supply and means for adjusting the operating position of one of said valve elements with reference to its controlling means.

4. In a carburetor, the combination of a mixture passageway having an inlet for the main air supply and having a mixture outlet, a throttle controlling the flow of mixture therethrough, a fuel passageway discharging into said mixture passageway, two valve elements for controlling the flow through said fuel passageway, one of said elements having a hole and the other of said elements comprising a member adapted to increase or decrease the rate of fuel flow through said hole upon relative movement between said elements, control means responsive to throttle position for moving one of said elements, a chamber having a flexible wall and operatively connected to transmit motion to the other of said valve elements, means connecting said chamber to said mixture passageway at a point on the engine side of said throttle means associated with said control means for effecting adjustment of the operating position of the valve element actuated thereby with respect to throttle position, and means for adjusting the operating position of the other valve element with respect to the position of said flexible wall.

5. In carbureting apparatus, the combination of a carbureting chamber, a throttle controlling the flow through said chamber, a fuel inlet to said chamber, a constant level supply chamber, a fuel passageway between said chamber and said inlet, a reciprocable sleeve in said passageway having a metering port, a metering pin controlling the size of said metering port, means actuated by motion of said throttle for shifting said sleeve, a bellows communicating with said carbureting chamber at a point on the engine side of said throttle so as to be responsive to the suction posterior to said throttle, said bellows being operatively connected for shifting said metering pin, and spring means arranged to oppose the response of said bellows to suction.

6. In a carburetor, the combination of a mixture passageway having an inlet for the main air supply and having a mixture outlet, a throttle controlling the flow through said mixture passageway, a shaft for said throttle, a fuel passageway discharging into said mixture passageway, a pair of valve elements controlling the flow through said fuel passageway, a cam on said throttle shaft, a lever transmitting motion from said cam to one of said valve elements, a bellows pneumatically connected to said mixture passageway and mechanically connected to the other of said valve elements for actuating the latter, and spring means for governing the pneumatic response of said bellows.

7. A plain tube carburetor comprising a mixture passageway having an inlet for the main air supply and having a mixture outlet, a butterfly throttle valve in said mixture outlet, a shaft for said throttle valve, a fuel nozzle discharging into said mixture passageway, a constant level supply chamber connected to said fuel nozzle, a well intermediate said constant level chamber and said nozzle and through which said fuel flows, valve mechanism in said well comprising a sleeve and cooperating metering pin, spring means operatively connected between said sleeve and said metering pin for producing relative movement therebetween in one direction, a port in said sleeve adapted to bleed air into the fuel fed to said nozzle, a cam on said throttle shaft, a bell crank lever operatively connected between said cam and said sleeve, a bellows mounted exteriorly of said carburetor and operatively connected to said metering pin, a passageway connecting the interior of said bellows with said mixture passageway at a point posterior to said throttle valve, and spring means arranged to oppose the response of said bellows to suction.

8. In a carburetting apparatus including a mixture passage and a throttle for controlling the flow of mixture therethrough, means for supplying fuel to said mixture passage and valve mechanism for metering said fuel supply, said valve mechanism including a throttle operated member for varying the fuel flow and suction responsive means for modifying the effective range of said throttle operated member.

In witness whereof we hereunto subscribe our names this 20th day of December, 1923.

ALEXANDER C. MABEE.
CAMERON A. WHITSETT.