United States Patent [19]

Divoky

[11] **Des. 265,083**

[45] ** **Jun. 22, 1982**

[54] **INFORMATION DISPLAY DEVICE FOR MOTOR VEHICLE INTERIOR**

[76] Inventor: **Alvin L. Divoky,** 1207 Childs Rd., Omaha, Nebr. 68147

[**] Term: **14 Years**

[21] Appl. No.: **91,260**

[22] Filed: **Nov. 5, 1979**

[51] **Int. Cl.** ..... **D12—16**

[52] **U.S. Cl.** ..... **D12/191;** D6/114; 296/97 C; 296/97 R; 40/10 R

[58] **Field of Search** ..... D12/191; 296/97 C, 97 R; D6/114; 40/10 R

[56] **References Cited**

U.S. PATENT DOCUMENTS

D. 168,707	1/1953	Pavenick	D12/191
D. 178,745	9/1956	Wheeler	D12/191
D. 186,504	11/1959	Chase	D12/191
D. 248,847	8/1978	Wooters	D12/191
3,016,262	1/1962	Hunt	D12/191
4,069,606	1/1978	Shevin	40/10 A

Primary Examiner—Veronica O'Keefe
Attorney, Agent, or Firm—George R. Nimmer

[57] **CLAIM**

The ornamental design for an information display device for motor vehicle interior, as shown and described.

DESCRIPTION

FIG. **1** is a perspective view taken from the top, left, and frontal directions of a first embodiment of my new design for information display device for motor vehicle interior;

FIG. **2** is a front elevational view of the first embodiment;

FIG. **3** is a left side elevational view of the first embodiment;

FIG. **4** is a right side elevational view of the first embodiment;

FIG. **5** is a perspective view taken from the top, the left, and the frontal directions of a second embodiment of my new design for information display device for motor vehicle interior;

FIG. **6** is a frontal elevational view of the second embodiment;

FIG. **7** is a left side elevational view of the second embodiment;

FIG. **8** is a rightward side elevational view of the second embodiment;

FIG. **9** is a top plan view of the first and second embodiments of my new design for information display device for motor vehicle interior;

FIG. **10** is a bottom plan view of the first and second embodiments;

FIG. **11** is a rearward elevational view of the first and of the second embodiments;

FIG. **12** is a sectional elevational view taken along lines **12—12** of FIGS. **2, 6,** and **9;** and

FIG. **13** is a sectional elevational view taken along lines **13—13** of FIGS. **2, 6,** and **9.**

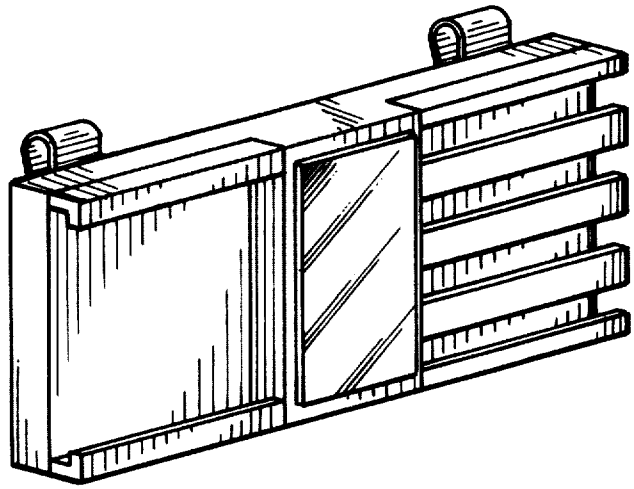

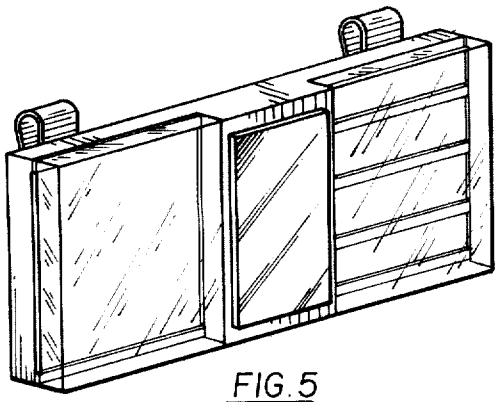

FIG. 5

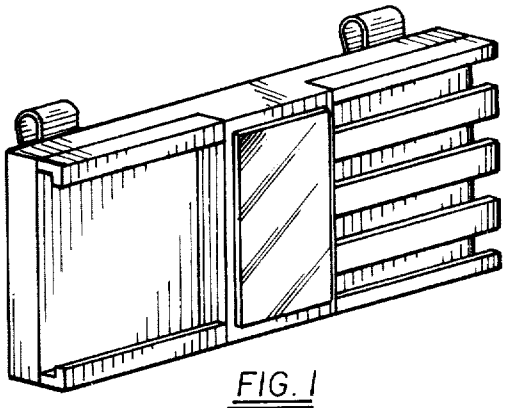

FIG. 1

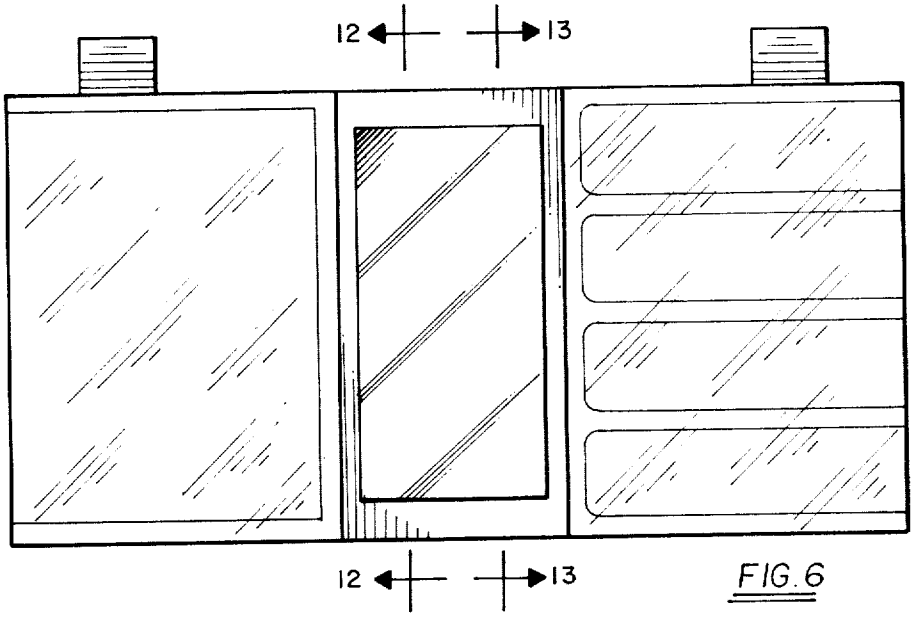

FIG. 6

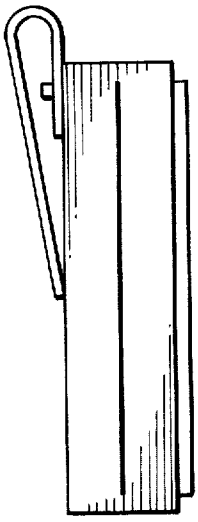

FIG. 7

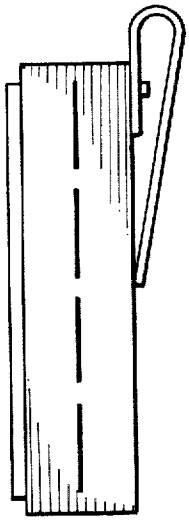

FIG. 8

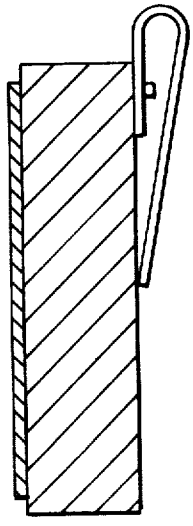

FIG. 12

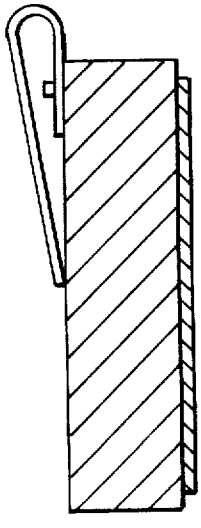

FIG. 13

FIG. 2

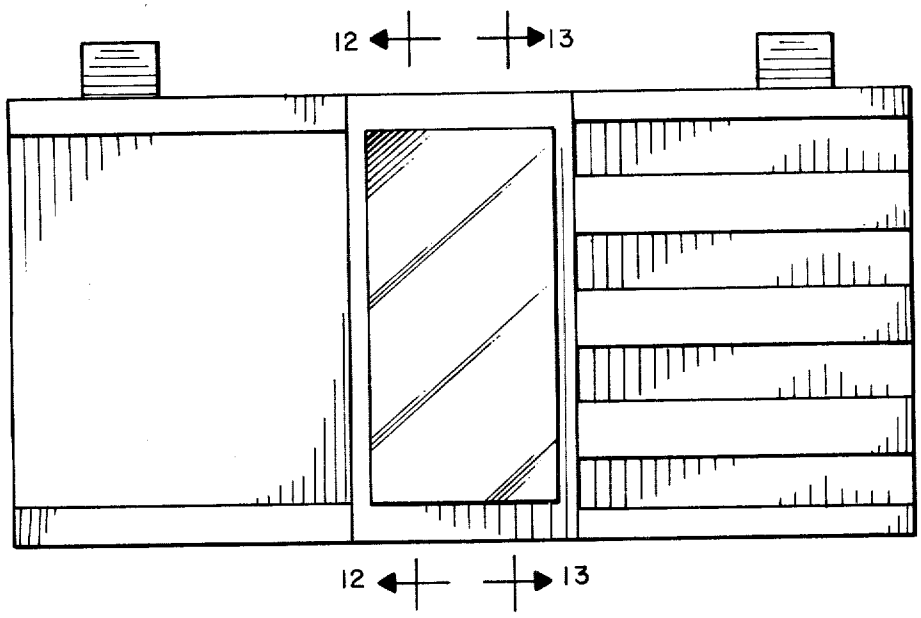

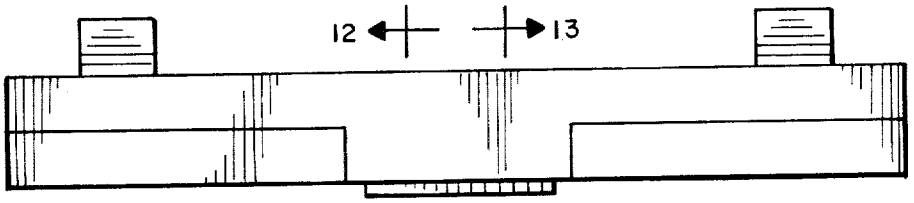

FIG. 9

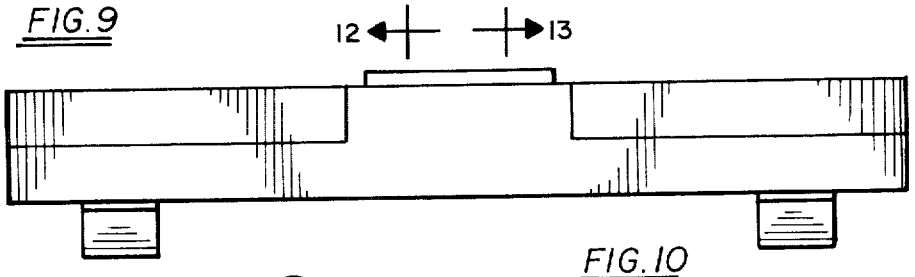

FIG. 10

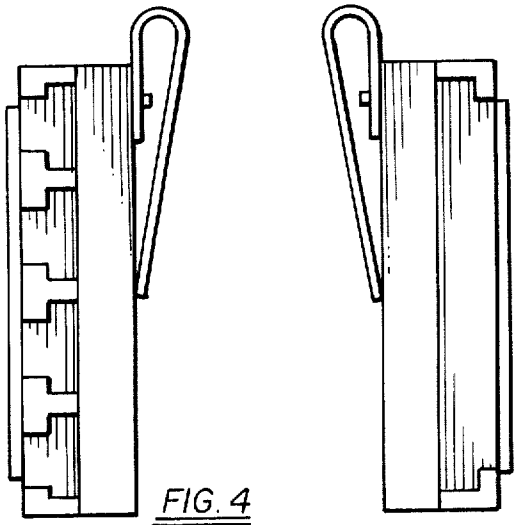

FIG. 4

FIG. 3

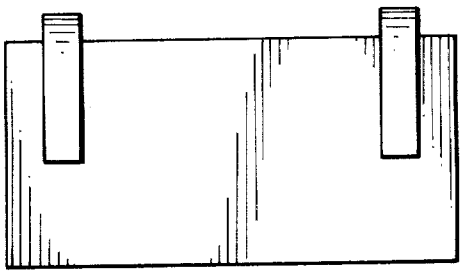

FIG. 11