March 23, 1926. 1,578,094

G. RAU

ARCH CONSTRUCTION

Filed March 18, 1925

Fig. 1

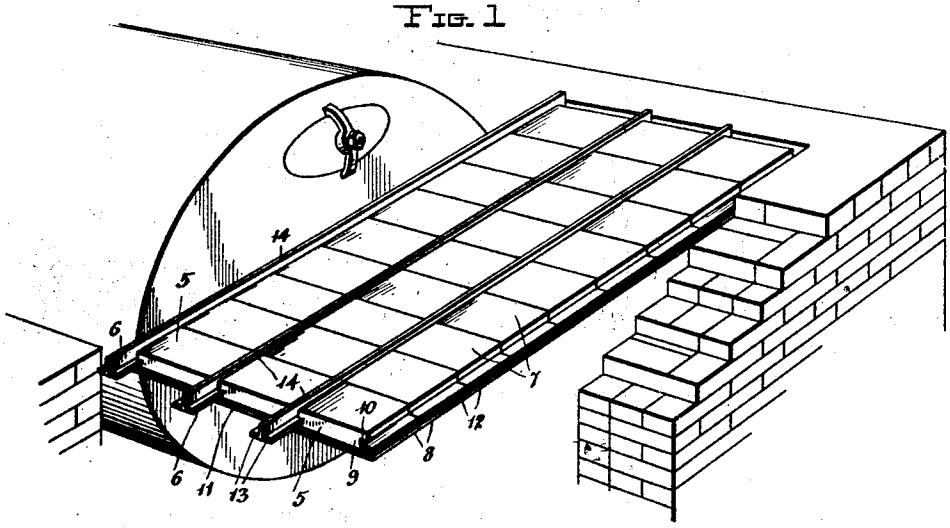

Fig. 2

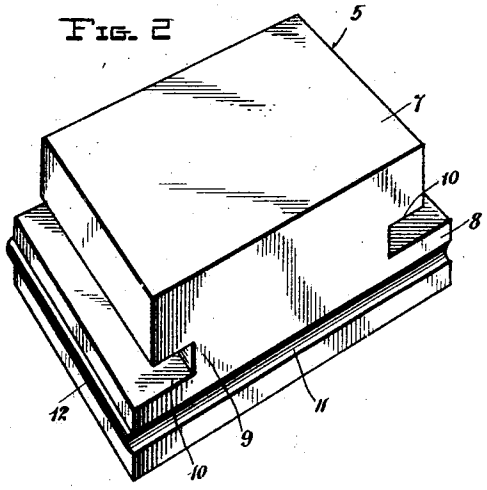

Fig. 3

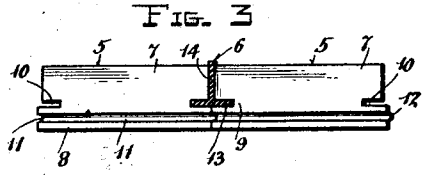

Fig. 4

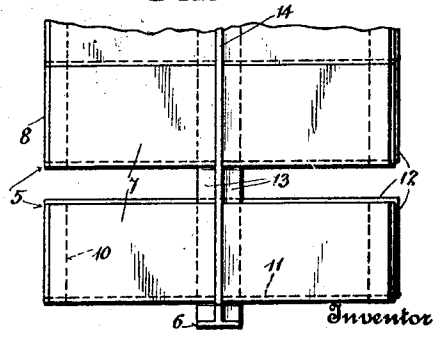

Fig. 5

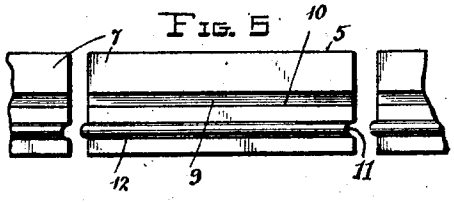

Inventor

Gustav Rau,

By

Attorney

Patented Mar. 23, 1926. 1,578,094

UNITED STATES PATENT OFFICE.

GUSTAV RAU, OF KANSAS CITY, MISSOURI.

ARCH CONSTRUCTION.

Application filed March 18, 1925. Serial No. 16,447.

To all whom it may concern:

Be it known that I, GUSTAV RAU, a citizen of the United States, residing at Kansas City, in the county of Jackson and State of Missouri, have invented new and useful Improvements in Arch Constructions, of which the following is a specification.

This invention relates to combustion arches for steam boiler furnaces and the like, and the primary object of the same is to provide an arch organization comprising supporting components composed of tile and flanged metal bars or beams of such construction that the said metal bars or beams will be materially protected against deterioration and warping by heat, and thereby provide for a more strong and durable arch structure and obviate to a great extent the formation of crevices or cracks between the components of the arch.

A further object of the invention is to provide a combustion arch embodying structural features of improvement that will permit ready and positive assemblage of the components thereof to produce a superior completed structure and increase the efficiency in operation of devices of this class.

With the foregoing and other objects and advantages in view, the invention consists in the construction and arrangement of the several parts which will be more fully hereinafter described and claimed.

In the drawing:

Fig. 1 is a perspective view of a portion of a combustion arch and boiler, showing a baffle organization associated therewith and embodying the features of the invention.

Fig. 2 is a detail perspective view of one of the tile components of the improved combustion arch baffle.

Fig. 3 is a side elevation, showing two of the tile components in joined association and engaging and enclosing one of the metal supporting bars or beams therefor, which is shown in cross section.

Fig. 4 is a top plan view of a portion of the improved combustion arch baffle, showing parts of the tile components separated from the remaining tile components and illustrating the manner of assembling these components with one of the metal bars or beams.

Fig. 5 is a side elevation of one tile component and portions of adjacent tile components, to illustrate the manner of joining the same.

The essential feature of the improved arch is a baffle comprising two components consisting of tiles 5, and metal supporting bars or beams 6 of inverted T-form, or of such analogous contour as to provide flange means for engagement with the tiles in a manner which will now be specifically pointed out. Each of the tiles 5 is formed from suitable refractory material and molded or shaped to form a head member 7 and a base member 8. The head member of each tile is of less length than the base member and the two members are connected by an intervening neck 9 provided by recessing the opposite ends of the tiles as at 10. The recesses or slots 10 have their lower walls continued outwardly in horizontal planes to the terminal ends of the base 8, the construction and proportions of the head 7 and base 8 of each tile as just explained providing for a projection of the opposite extremities of the tile beyond the ends of the head. The base 8 of the tile has its sides and ends alternately formed with grooves 11 and ribs 12, the bases of the adjacent tiles having the said grooves 11 and ribs 12 in reverse order, or where the side and end grooves and ribs 11 and 12 are formed in one tile they are replaced by rib and grooves of a similar nature in reverse positions in the adjacent tiles, to fit in and receive the ribs and grooves of the adjacent tile bases. The metal bars or beams 6 have horizontal flanges 13 extending equally outward on opposite sides of a central vertical flange 14, so as to form a device of inverted I-shape, as hereinbefore specified. The central vertical flanges 14 of the bars or beams 6 are of materially greater extent than the horizontal flanges 13 on opposite sides of the said vertical flanges, and when the components of the improved baffle are associated, the bases of the bars or beams 6 are tightly enclosed within and between the ends of the tiles 5.

In assembling the components of the improved baffle, the tiles 5 are moved longitudinally over the bars or beams 6, the flanges 13 of the latter snugly fitting in the recesses or slots 10 of the tiles and the united flanges 13 extending across the joints between the ends of the tiles with the vertical flanges 14 projecting upwardly between the opposite terminals of the heads 7 and above the latter, the vertical extent of the flanges 14 being greater than the vertical

thickness of the tile heads 7 from the recesses or slots 10 to the upper sides of said tile heads. When the tiles 5 are closely assembled, the grooves 11 and ribs 12 form tight joints or closing means below the bases of the bars or beams 7, and by this means the said bars or beams are shielded against direct contact with the flame and intense heat currents, and furthermore, the close joints between the sides and ends of the tiles 5 eliminates any cracks or crevices, and leakage through the baffle is thus prevented. It will be understood that the metal bars or beams 6 are supported at their ends in the brick structure of the arch, and the improved baffle as a whole may be made in various dimensions, or be of different extent in length and width in accordance with the space intended to be covered in different sizes of arches. When the tiles 5 are associated with the bars or beams 6, they may be suitably secured at their sides and ends if desired, and are held up in level organization by the said bars or beams, and the projection of the vertical flanges 14 of the bars or beams above the upper surfaces of the tiles will reinforce and strengthen the entire structure. Furthermore, by forming the tiles and bars or beams as hereinbefore specified, an association of these two components may be expeditiously effected with certainty and accuracy, and a materially advantageous form of baffle may thus be produced by a simple operation and at comparatively small expense.

What is claimed as new is:

A combustion arch of the class specified, comprising metal supporting components of inverted T-form with the lower horizontal flanged bases extending equally beyond opposite sides of the vertical flanges thereof, and refractory tile components having similar end recesses of uniform depth to receive and snugly enclose the horizontal flanged bases of the supporting components and the head members of the said tile components of less length than the base portions of the same components to provide a space between contiguous ends of the heads of a width equal to the thickness of the vertical flanges of the supporting components and whereby the said supporting components are held secured and protected against burning solely by the tile components, the tile components having their upper surfaces below the upper edges of the supporting components and said upper edges of the supporting components and a minimized portion of the vertical flanges of said latter components standing above the top surfaces of the tile components and serving as a reinforcing means, the supporting components being parallel and extending continuously and full length across the arch, the tile components also shielding the base flanges of the supporting components and having interfitting ribs and grooves at the ends and sides below the grooves for the supporting components to prevent formation of crevices below the location of the bases of the supporting components.

In testimony whereof I have hereunto set my hand.

GUSTAV RAU.