No. 719,134. PATENTED JAN. 27, 1903.

M. S. PITTMAN.

RAILWAY SWITCH.

APPLICATION FILED JAN. 2, 1902.

NO MODEL.

Fig. 1.

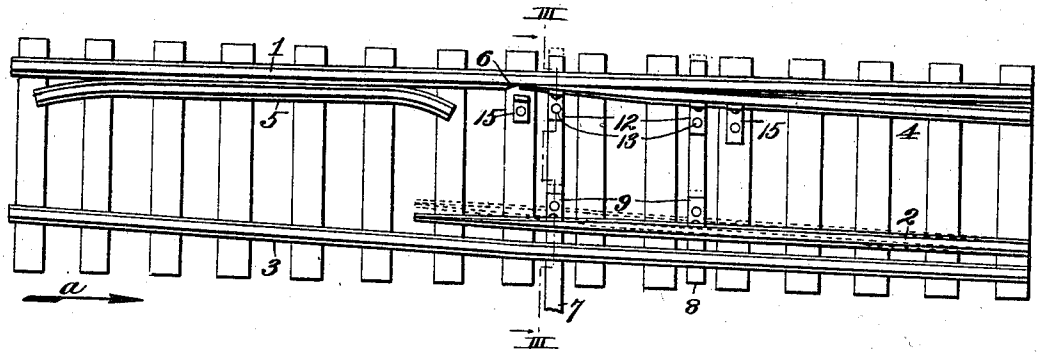

Fig. 2.

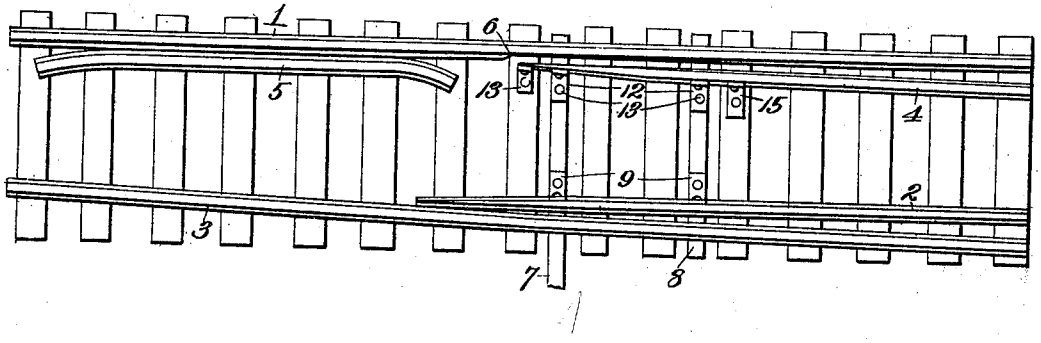

Fig. 3.

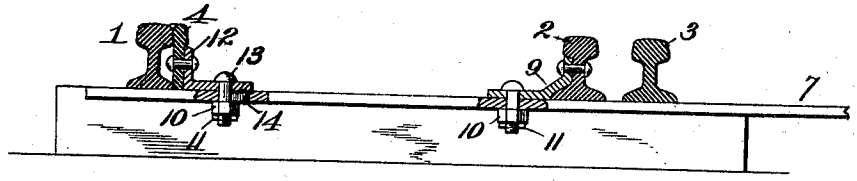

Witnesses:

Arthur McArthur

George McDougall

Inventor:

Moses S. Pittman.

By Fischer & Thorpe

Attys.

THE NORRIS PETERS CO., PHOTO-LITHO., WASHINGTON, D. C.

UNITED STATES PATENT OFFICE.

MOSES S. PITTMAN, OF INDEPENDENCE, MISSOURI.

RAILWAY-SWITCH.

SPECIFICATION forming part of Letters Patent No. 719,134, dated January 27, 1903.

Application filed January 2, 1902. Serial No. 88,013. (No model.)

To all whom it may concern:

Be it known that I, MOSES S. PITTMAN, a citizen of the United States, residing at Independence, in the county of Jackson and State of Missouri, have invented certain new and useful Improvements in Railway-Switches, of which the following is a specification.

My invention relates to railway-switches; and my object is to produce a structure of this character which may be employed as a movable switch for railway-trains or as a stationary switch where it is intended that all trains moving in the same direction shall travel on the same track.

A further object is to provide a switch which eliminates all danger of derailment in the passage of a train from the side to the main track whether moving forward or backward.

Another object is to provide a differential movement for the switch-points to insure the complete opening of the switch when it is desired that a train shall pass from the main onto the side track.

A still further object is to provide means whereby the train traveling in the direction indicated by the arrow *a* shall be reliably guided onto the main-track switch-point and from the main-track switch-point onto the main track when traveling in the opposite direction, it being assumed, of course, that the switch is closed in both instances.

With these objects in view the invention consists in certain novel and peculiar features of construction and arrangement, as hereinafter described and claimed, and in order that it may be fully understood reference is to be had to the accompanying drawings, in which—

Figure 1 is a top plan view of a railway-switch embodying my invention, the switch being shown as open. Fig. 2 is a similar view with the switch closed or in its normal position, which position is that which it always occupies if used as a stationary switch. Fig. 3 is an enlarged section taken on the line III III of Fig. 1.

Referring to the drawings in detail, 1 designates a main-track rail extending parallel with the course of the train, and 2 the main-track switch-point, which normally extends parallel with the rail 1.

3 designates a rail shown slightly bent in the drawings, but which may be perfectly straight. This rail is arranged at an almost imperceptible angle in practice to rail 1 and has one end in line with the main-track switch-point when the latter occupies its normal or closed position and its opposite end slightly outward of such switch-point and parallel with the side-track switch-point 4 when the switch is closed. That portion of rail 3 to the left of the switch-point 2 forms a part of the main track, while that portion to the right of said point forms a portion of the side track. The angle of rail 3 is so slight that the wheels of the cars traveling from left to right, Fig. 2, remain on such rail until it has lapped the switch-point a substantial distance, this arrangement being to protect the thinnest and weakest portions of the switch-point. In this connection it will be understood that switch-point 2 tapers from both sides, so that when its outer flange abuts against the inner flange of rail 3 (see Fig. 2) the point of the rail shall be in the plane slightly outward of the main track and at the same time more than the thickness of the wheel-flange inward of said rail, so that a train may pass from the side track onto the main track or from the main track onto the side track without any possible chance of being derailed. To absolutely insure the continuance of the train on the main track when traveling in the direction indicated by arrow *a* with the switch closed, I provide a guard-rail 5, which parallels main-track rail 1, so as to hold the wheels in a course parallel with rail 1, and therefore traveling in a course sufficiently divergent from rail 3 to insure the disposition of their flanges at the inner side of said switch-point. Switch-point 4 is beveled at its free end at both sides and is adapted when the switch is open to fit snugly against the inner side of rail 1 in a notch 6 of the flange thereof, and said switch-point is connected to switch-point 2 at suitable distances apart by cross-bars 7 and 8, underlying rails 1 and 3, as well as the switch-points, one of the said bars, preferably bar 7, being adapted to have connection with a switch-stand (not shown) of any suitable or preferred type.

9 designates chair or angle plates rigidly connecting switch-point 2 to bars 7 and 8, the

nuts 10, used to engage the bolts extending through the angle-plates and bars, being locked in position by cross-pins or cotters 11.

12 designates angle-plates bolted rigidly to switch-point 4 and slidingly to bars 7 and 8, the sliding connection comprising bolts 13, extending down through slots 14 of the bars and engaged below the latter by nuts 10 and pins or cotters 11, the inward movement of switch-point 4 being limited positively by angle-plates 15, secured to underlying cross-ties.

In practice the construction shown and described is of course duplicated at the other end of the side track, so that with both switches locked in their closed positions, as shown in Fig. 2, the structure comprises practically a double track, which trains moving in opposite directions pass over without conflict and without any operation of the switches, it being understood, of course, that in the duplicate of the mechanism shown located at the proper point the positions of the rails are reversed—that is, rail 1 with its guard-plate and short switch-point are at the left-hand side of the train traveling in the opposite direction from that indicated by the arrow *a*, while the longer switch-point 2 and rail 3 are at the right-hand side of such train. Two trains traveling in opposite directions and reaching the opposite ends of the double track at about the same time will therefore pass each other as if on a double track without requiring any manipulation of the switches. The structure, shown as a stationary switch, is therefore peculiarly appropriate for street-railways. In Fig. 1 a train traveling in the direction indicated by the arrow *a* may be deflected onto the side track by a manipulation of the switch-stand, which will dispose the switch as shown in Fig. 1, in which figure the full movement of switch-point 2 is indicated by dotted lines, this extra movement taking place after the movement of the switch-point 4 has ceased and equaling the length of slots 14. It is then absolutely impossible for a train moving in the direction indicated to strike the free end of the longer switch-point 2 when the switch is opened. As soon as the train has passed onto the side track the switch-operator returns the switch to its original position, as in Fig. 2. The train may now back onto the main line again, or may continue forward until it is automatically transferred onto the main line at the opposite end of the side track, it being understood that no switch manipulation at such end of said track is necessary, or, while the train is on the side track, a train traveling in either direction may pass it on the main track without any further switch manipulation.

It has been explained with regard to the long switch-point that the weight of the train is always sustained by the contiguous rail to relieve the point of undue wear. The same is true of switch-point 4, which is so proportioned as to size and position relative to rail 1 that the latter always takes the weight of the train off of the tapered end of such point. It has also been explained that in opening the switch the long switch-point has movement after that of the short switch-point terminates. Conversely, it will be apparent that as the switch is closed the short switch-point is arrested by angle-plates 15 before the movement of the inner switch-point ceases, such movement in the construction shown being limited only by the inner flange of rail 3.

In switches of the type now in common use wherein each switch-point must abut against the contiguous rail, and thereby necessitate the manipulation of the switch for trains passing in both directions, accidents frequently occur through the failure of the operator to open the switch to enable the train to pass from the side track onto the main track. My invention does not contain this defect, for the reason that switch-point 2 when closed is still sufficiently remote from rail 3 for the wheel-flange to pass between them. Again, with the old switch it frequently happens that snow and ice get between the rail and the switch-point and by preventing the latter from abutting against the rail leave an opening into which the wheel-flanges may enter in traveling in the direction indicated by the arrow *a*, derailment being the obvious consequence. With my switch-point spaced some distance inward of rail 3, in conjunction with the guard-rail 5 to hold the opposite wheel-flanges snugly against rail 1, it is obvious that this serious difficulty is never encountered and that the lodgment in said opening of snow or ice will not impair the efficiency of the switch, and in this connection it should be stated that I contemplate the use of the guard-rail on switches as at present constructed in order that the flanges of the off-side wheels may be held snugly against the rail upon which said wheels run, and thereby insure the disposition of the opposite wheel-flanges inward of the switch-point should the latter not have been clamped as tightly against its contiguous rail as desirable. With a guard-rail of this type and arrangement it is believed that many serious accidents would never have occurred.

From the above description it will be apparent that I have produced a railway-switch embodying the features enumerated as desirable in the statement of invention, and while I have illustrated and described its preferred embodiment it is to be understood that I reserve the right to make all changes properly falling within its spirit and scope.

Having thus described the invention, what I claim as new, and desire to secure by Letters Patent, is—

In a railway-switch the combination of a track composed of two straight rails extending at a slight angle to each other for their full length, and closer together at one end than at the other, a guard-rail inward of and paralleling one of said rails for a suitable distance, a switch-point paralleling the same

rail and located inward of the other rail, the free end of said switch-point being disposed inward of and at a distance from said other rail slightly exceeding the thickness of the wheel-flange; the guard-rail and switch-point being relatively disposed so that the former holds against its parallel rail the flange of each wheel thereon until the flange of the opposite companion wheel has lapped the inner side of said switch-point.

In testimony whereof I affix my signature in the presence of two witnesses.

MOSES S. PITTMAN.

Witnesses:
H. C. RODGERS,
G. Y. THORPE.