(No Model.) 5 Sheets—Sheet 1.

E. S. SMITH.

CASH REGISTER AND INDICATOR.

No. 590,556. Patented Sept. 21, 1897.

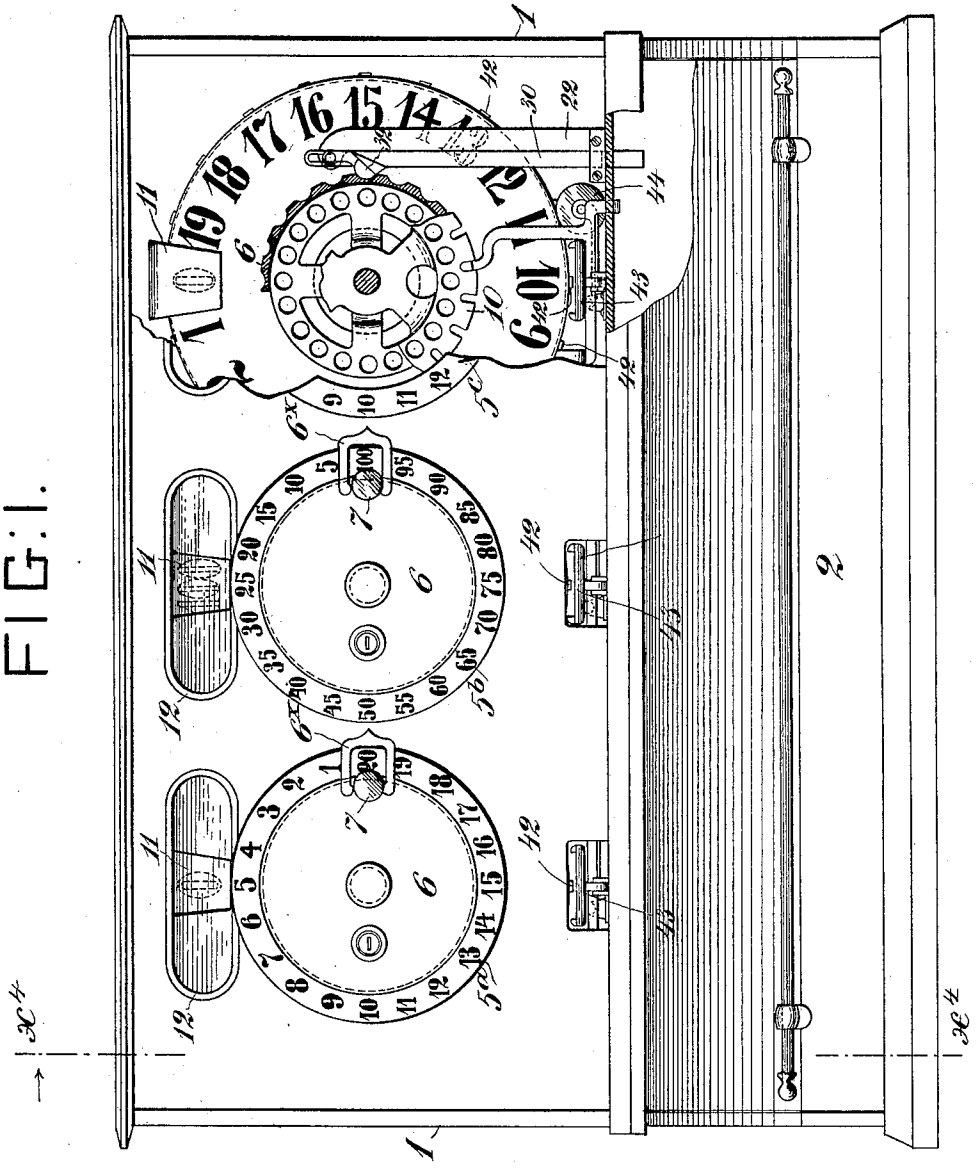

FIG: 1.

INVENTOR:
Elmer S. Smith

WITNESSES:
F. W. Wiman
John D. Savin

By Henry Connett
Attorney.

THE NORRIS PETERS CO., PHOTO-LITHO., WASHINGTON, D. C.

(No Model.) 5 Sheets—Sheet 2.

E. S. SMITH.

CASH REGISTER AND INDICATOR.

No. 590,556. Patented Sept. 21, 1897.

FIG. 2.

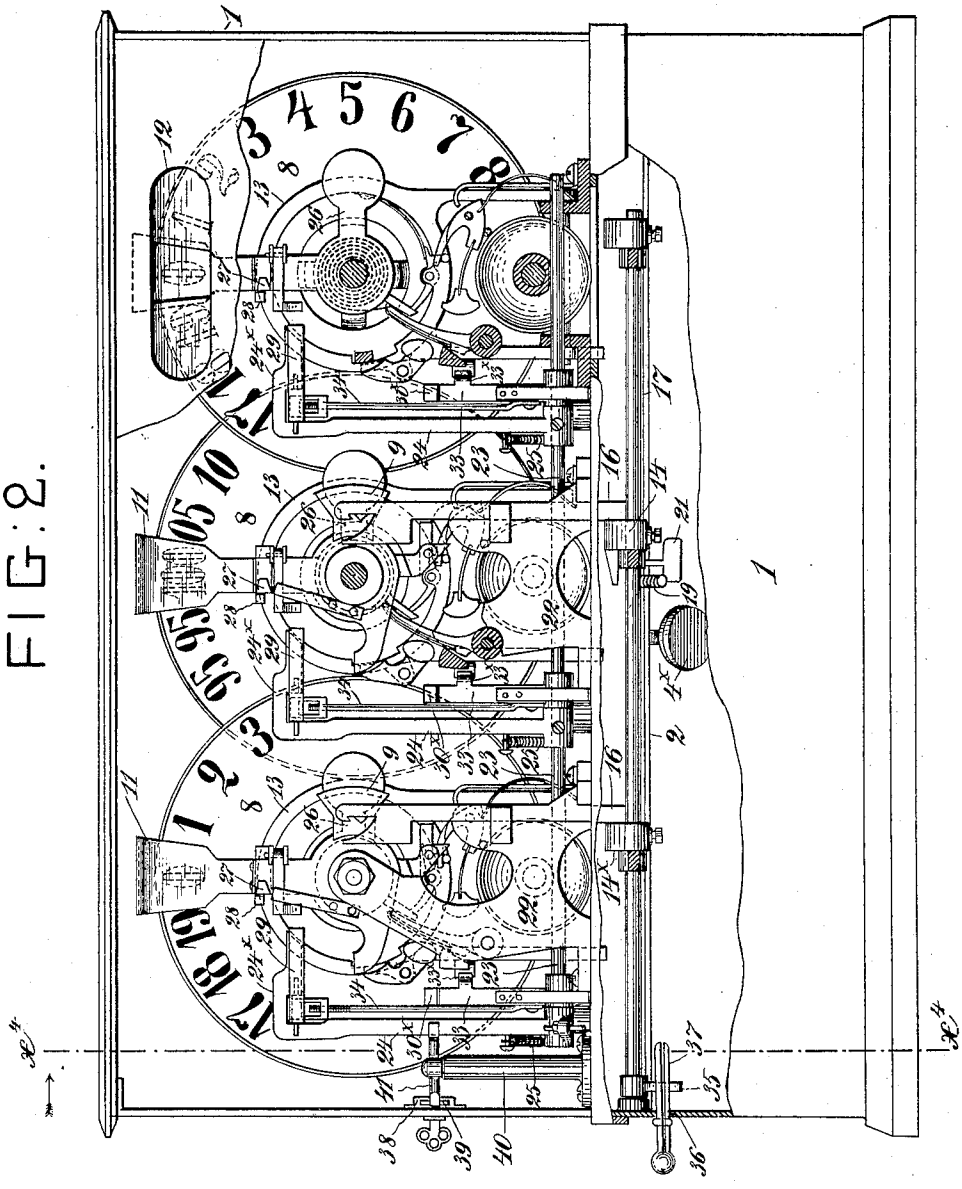

INVENTOR:

Elmer S. Smith

By Henry Connett

Attorney.

WITNESSES:

F. W. Wimer

John D. Savin

THE NORRIS PETERS CO., PHOTO-LITHO., WASHINGTON, D.C.

(No Model.)

5 Sheets—Sheet 3.

E. S. SMITH.

CASH REGISTER AND INDICATOR.

No. 590,556.

Patented Sept. 21, 1897.

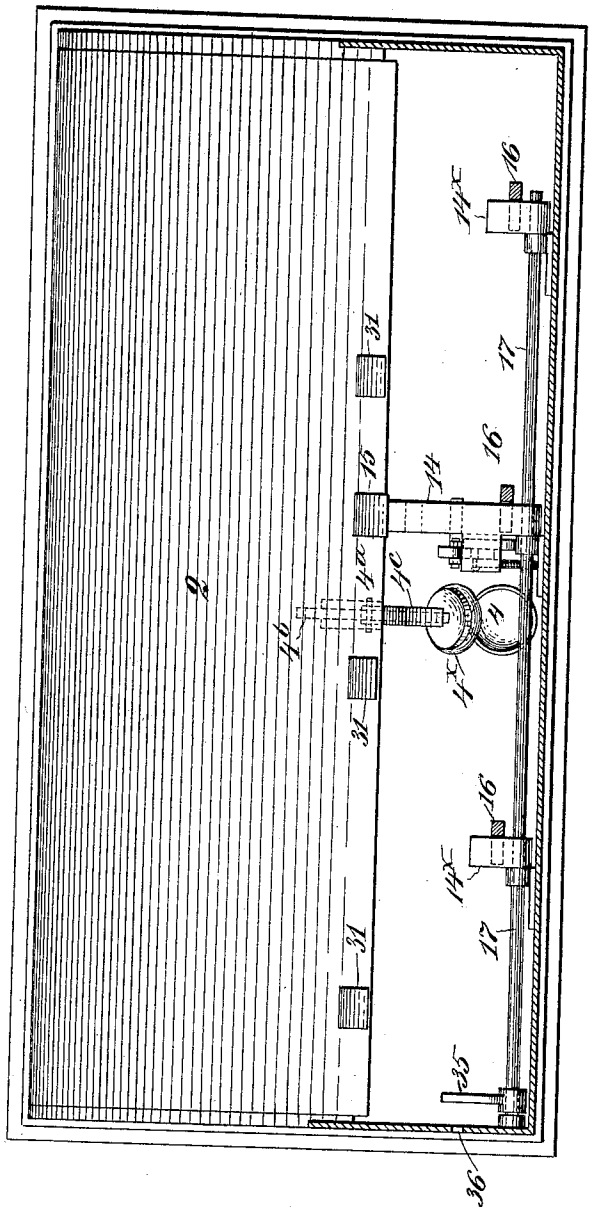

FIG: 3.

INVENTOR:

Elmer S. Smith

By Henry Connett

Attorney.

WITNESSES:

F. W. Wiman

John D. Gavin

THE NORRIS PETERS CO., PHOTO-LITHO., WASHINGTON, D. C.

(No Model.) 5 Sheets—Sheet 4.

E. S. SMITH.

CASH REGISTER AND INDICATOR.

No. 590,556. Patented Sept. 21, 1897.

FIG: 5.

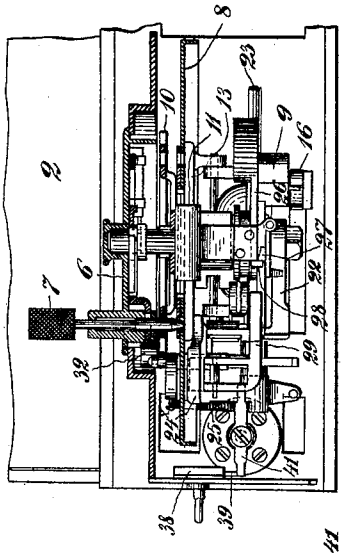

FIG: 6.

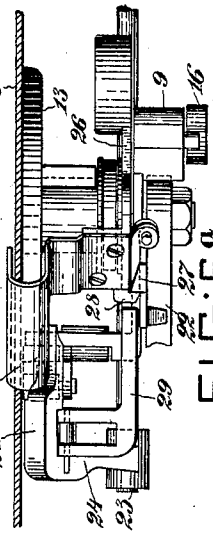

FIG: 6a.

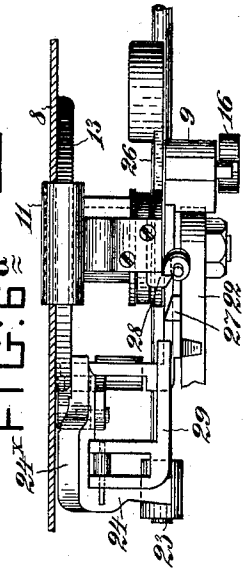

FIG: 4.

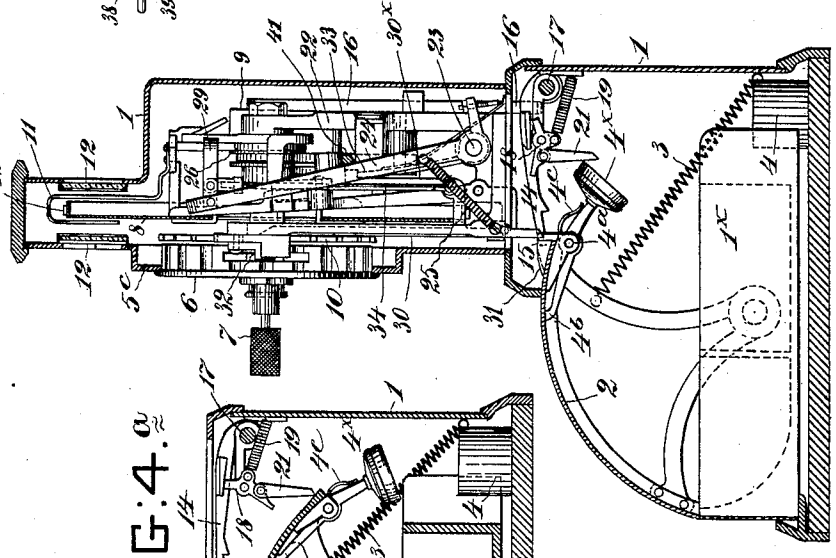

FIG: 4a.

WITNESSES:

F. W. Dimman

John D. Savin

INVENTOR:

Elmer S. Smith

By Henry Connett

Attorney.

THE NORRIS PETERS CO., PHOTO-LITHO., WASHINGTON, D. C.

(No Model.) 5 Sheets—Sheet 5.

E. S. SMITH.

CASH REGISTER AND INDICATOR.

No. 590,556. Patented Sept. 21, 1897.

FIG. 8.

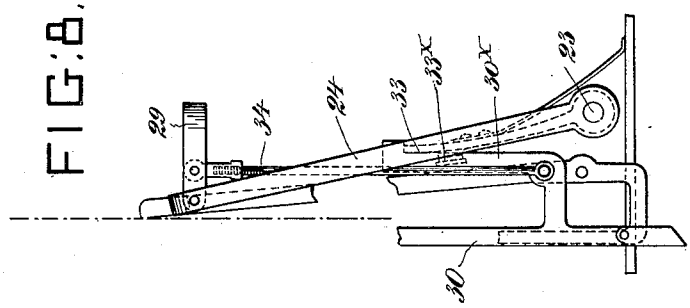

FIG. 7a.

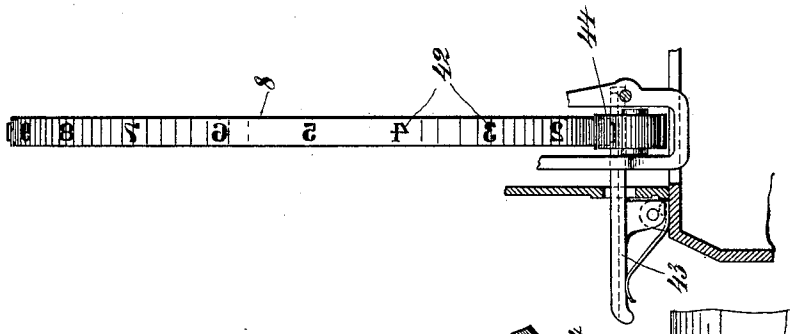

FIG. 7.

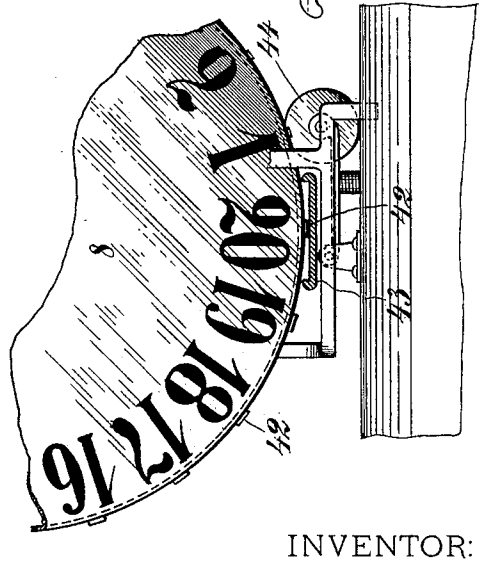

INVENTOR:

Elmer S. Smith

By Henry Connett

Attorney.

WITNESSES:

F. W. Zimmer

John D. Savin

THE NORRIS PETERS CO. PHOTO-LITHO., WASHINGTON, D. C.

UNITED STATES PATENT OFFICE.

ELMER S. SMITH, OF BOUND BROOK, NEW JERSEY, ASSIGNOR TO THE HANDY STANDARD CASH REGISTER COMPANY, OF NEWARK, NEW JERSEY.

CASH REGISTER AND INDICATOR.

SPECIFICATION forming part of Letters Patent No. 590,556, dated September 21, 1897.

Application filed August 22, 1896. Serial No. 603,581. (No model.)

To all whom it may concern:

Be it known that I, ELMER S. SMITH, a citizen of the United States, residing at Bound Brook, Somerset county, New Jersey, have invented certain new and useful Improvements in Cash Registering and Indicating Machines, of which the following is a specification.

This invention relates to cash registers and indicators of the rotating-dial pattern, of which the machines described in the United States Patent No. 500,164, granted to E. F. Spaulding June 27, 1893, and No. 538,707, granted to me May 7, 1895, are types; and the present invention consists in certain improvements in the machines described in said patents, which latter may be referred to for a fuller understanding of the parts of the machine not minutely set forth in this application.

The improvements to which this application relates are in part devices for adapting the invention to a machine with a plurality of dials and for regulating the operation of the several shutters through the medium of the till-cover; in part to means for releasing the till-cover, so that it may open independently of the operation of the indicating and registering mechanisms; in part to means for cushioning the till-cover when it flies open; in part to a device for locking against operation the entire set of indicating and registering mechanisms, and in part to a device for conveniently printing the amount of a sale on a card or ticket for the customer. Other features which have been improved will be hereinafter described. All the novel features of the invention will be carefully defined in the claims.

As the present invention does not relate to the special registering and totalizing devices, whereby the proprietor is enabled to ascertain at any time the total amount of sales, these devices are not herein shown and described. It will suffice to employ the devices for this purpose illustrated in my former patent, No. 538,707, and best seen in Fig. 4 of that patent.

It is not new in machines of this general class to mount in one casing or cabinet two sets of mechanisms, one set for registering "dollar" sales and another for registering "cent" sales. One of such machines is illustrated in my aforesaid patent, but it is desirable to couple together two or more of such mechanisms, each having a shutter which will disclose by displacement the proper numeral for indicating the sale, and to so construct them that if the till-cover be left open a sale may be indicated in dollars and cents on all of the mechanisms and stand displayed until the till-cover is closed and the next sale is indicated. In the machine which forms the subject-matter of this application any number of sets of mechanisms may be employed—as, for example, one for dollars, one for five cents and multiples thereof, and one for odd cents—and these sets are so connected mechanically that a complete sale may be indicated on the several numeral-disks and the indicating-numerals left exposed until the next sale. This construction better adapts the machine for sales where the amount exceeds one dollar. The mechanism for effecting this will be hereinafter described.

In the accompanying drawings, which illustrate an embodiment of the invention, Figure 1 is a front elevation of the machine with the front plate of the cabinet or casing broken away at the right. Fig. 2 is a rear elevation with the detachable back plate of the casing removed and part of the casing below broken away. Fig. 3 is a sectional plan, the till-cover and the mechanism actuated thereby being seen in plan. Fig. 4 is a transverse vertical section in the plane indicated by line x^1 in Figs. 1 and 2; and Fig. 4^a is a similar section of the lower part of the machine, showing the till-cover and parts in a position different from that seen in Fig. 3. Fig. 5 is a plan view of the mechanism seen at the left in Fig. 2. Figs. 6 and 6^a are detail plan views of the tumbler mechanism on a somewhat larger scale than the preceding, showing the parts in different positions. Figs. 7 and 7^a are detached fragmentary views, on a larger scale than the principal views, illustrating the mechanism for printing tickets. Fig. 8 is a detached side view of the device for elevating and supporting the bridge 29.

The indicating and registering mechanism is contained in a cabinet or casing 1, similar

in form to that illustrated in my former patent, No. 538,707. This casing has a till $1^{\times}$ in its lower part and a pivoted till-cover 2, mounted in substantially the same way as the cover in my said patent and provided with a spring 3 for throwing open the cover when it is released by the operation of the registering mechanism or otherwise. In order to cushion the opening movement of the till-cover when under the influence of the spring, I now employ a dash-pot 4, secured in the bottom of the casing at the back of the till, and a piston $4^{\times}$, carried by the till-cover at its rear edge to enter said dash-pot when the cover opens. In order to allow the piston to adapt itself to the dash-pot after it enters the same, the stem of the piston is fulcrumed at 4^{a} to the cover like a lever, and the end 4^{b} of the stem, which projects beyond the fulcrum, is kept pressed up elastically against the under surface of the cover by a spring 4^{c}. As the piston passes down into the dash-pot the spring 4^{c} yields a little to allow the piston to adjust itself to the pot.

As seen in Fig. 1, the front plate of the casing above the till has on it three ring dials 5^{a}, 5^{b}, and 5^{c}. The first is the dollar dial, graduated and numbered from "1" to "20." The second is a dial for registering and indicating cents in fives or multiples thereof. This dial is graduated and numbered "5," "10," "15," &c., up to "100." The third dial 5^{c}, partly broken away in Fig. 1, is for the odd cents, as "1," "2," "3," "4," &c., and will be divided and numbered for convenience the same as the dollar-dial 5^{a}. These several dials belong to three several indicating and registering mechanisms which I will now describe, premising that as much of the mechanism is in substance the same as that illustrated in the before-mentioned patents, Nos. 500,164 and 538,707, and operates in the same manner only a brief description of these parts will be required. Each mechanism has an operating-disk 6 and pin 7 and the registering or adding mechanisms are behind the respective disks 6. In operating the mechanism for registering a sale the till-cover must first be closed to unlock the pin 7. The pin is now drawn out so as to free the numeral-disk 8 and the tumbler 9 and be free from the units-wheel 10. As soon as the disk 8 is freed its spring returns it to its stop or normal position and the shutter 11 is returned by the tumbler to its normal position, where it hides the numeral which would otherwise appear at the sight-aperture 12. The operator now turns the operating-disk 6 until the index-loop $6^{\times}$ thereon indicates or includes the desired numeral on the dial, and then pushes in the pin 7, which passes through coinciding holes in the units-wheel 10 and numeral-disk 8 and presses back the tilting locking-frame 13. The pin being pushed in as far as it will go, the operating-disk, units-wheel, and numeral-disk are rotated to the right by means of the pin 7 to the locking or normal point, where said pin is seen in Fig. 1. Just before reaching this point the pin encounters a projection on the tumbler 9, rocking the latter to the right. This tumbler controls the shutter 11 and moves it to the right, so as to uncover and disclose the proper numeral on the numeral-disk 8. At the moment the pin reaches the normal point its tip or inserted end reaches and enters a locking-recess in the locking-frame 13 and the latter is instantly thrown forward again by its spring. This device of the locking-recess in the frame 13 opposite the normal point is clearly shown in Figs. 8 and 9 of the Spaulding patent, No. 500,164, and will not require illustration here. The inserted pin now holds the tumbler in its rocked position, and so long as the tumbler controls the shutter the latter will remain displaced and the indicating-numeral will remain displayed at the sight-aperture 12, as seen in Fig. 1. In the meantime the till-cover has remained locked, shut by a locking-arm 14, the front end of which takes behind a shoulder 15 on the till-cover, but when the tumbler 9 is rocked a lug on the counterweight of the tumbler engages a shoulder on an upright gravity-bolt 16, which extends down and hooks under the arm 14 and lifts said arm, thus releasing the till-cover, which is instantly thrown open by its spring. This escapement device, comprising the lug on the counterweight and the shoulder on the gravity-bolt, is illustrated in Fig. 4 of the Spaulding patent, No. 500,164.

So far as above described the mechanism is in substance the same as that in the before-mentioned patents. I will now describe certain new features, including the connecting devices between the several mechanisms, and explain their functions.

Extending lengthwise of the casing is a rock-shaft 17, on which is fixed the locking-arm 14, before described, which is engaged by the hooked lower end of the bolt 16 of the mechanism seen at the center in Fig. 2. On this rock-shaft are also fixed two shorter arms $14^{\times}$, engaged by the bolts 16 of the other mechanisms, so that whichever mechanism is operated the locking-arm will be raised and the till-cover freed, so that it may open. It is not material by which of the several mechanisms the locking-arm 14 is operated.

In order that when the escapement on the tumbler 9 lifts and lets fall the bolt 16, and with the latter the locking-arm 14, the said arm may not fall back and catch the till-cover before the latter has an opportunity to open, a support is provided for the elevated arm 14, which keeps it elevated until the cover is again closed. This device is illustrated in Figs. 2, 3, 4, and 4^{a}. Arranged under the arm 14 is a rocker 18, pivoted on a bracket on the casing, and this rocker is provided with a spring 19, which when the arm 14 is lifted instantly turns the rocker 18 to the supporting position seen in Fig. 4^{a}. As the till-cover flies open the elevated margin

of its rear edge wipes past a pendent hinged trip 21 on the rocker and displaces it, but when the till-cover is closed the edge of the cover will engage the trip 21, lifting it and swinging it forward, and thereby the rocker 18 is rocked and the arm 14 allowed to fall. The weight of the arm holds the rocker in this position, (seen in Fig. 3,) as the spring 19 is relatively weak and acts with a short leverage.

In the base of the frame 22, in which the internal mechanisms are mounted, is a rock-shaft 23, on which are secured three arms 24, each of which has at its upper end a lateral branch $24^{\times}$, which takes behind and bears on a locking-frame 13 of one of the several mechanisms, so that whichever mechanism may be operated the shaft 23 will be rocked by the tilting frame 13 and all of the arms 24 moved back. A suitable spring 25 keeps the arms 24 pressed up to the respective locking-frames. The purpose of these arms will now be explained with especial reference to Figs. 6 and 6^{a}.

The shutter 11 is not mounted directly on the tumbler 9, as in my former patent, but on an auxiliary tumbler 26, adjacent thereto, and the two tumblers are coupled together by a spring-latch 27 on tumbler 9 engaging a latch-shoulder 28 on the auxiliary tumbler 26, thus normally coupling them together in order that when the tumbler 9 is rocked so as to displace the shutter 11 the tumbler 26 will move with it. To the upper end of the arm 24 is hinged on a horizontal axis a bridge 29, which when turned up to its operative horizontal position bridges the space between the branch $24^{\times}$ and the free end of the latch 27, so that under these conditions, if either of the arms 24 be pressed back by a locking-frame 13, the bridge 29 will press back the free end of the spring-latch and set free the auxiliary tumbler 26, when the counterweight on said tumbler will rock the same back to its normal position and close the shutter 11, thus permitting the shutter to act without the necessity of operating the mechanism with which that particular shutter is connected; but this can only occur after the till-cover is closed, for reasons that I will now explain.

In my former patent, No. 538,707, is shown a device for unlocking the operating-pin (so that it may be drawn out) by the closing of the till-cover. This device comprises in the present application a vertically-arranged gravity-bolt 30, the upper end of which has a cam surface or bevel which, when the bolt is pressed upward by a cam 31 on the till-cover at the moment of closing the latter, acts on a hinged dog 32 on the frame 22 and presses this dog in, so as to displace the bar which locks the operating-pin. This unlocking device being clearly shown and described in my former patent will require no further description here. In the present case this bolt 30 has an upright $30^{\times}$, which has on it a shoulder under which takes the upper end of a spring-dog 33 whenever the bolt 30 is lifted, said dog thus supporting the bolt in its elevated position. The dog has a lateral branch $33^{\times}$, which extends behind the locking-frame 13, so that when this frame is pressed back by the pin 7 the dog 33 will be disengaged from the shoulder on the upright $30^{\times}$ and the bolt 30 allowed to fall, thus permitting the dog 32 to fall away and allow the lock-bar at the back of the operating-disk to lock the pin 7. A supporting device somewhat similar to this is also illustrated in my former patent.

From the base of the bolt 30 a rod 34 extends up to and is coupled to the bridge 29, so that when the bolt 30 is elevated by the cam on the till-cover in closing the latter the bridge 29 will be elevated to its operative position and supported in that position, as well as the bolt 30, by the dog 33, so whichever mechanism may be operated while the till-cover is closed all of the shutters will be released and allowed to return to their normal numeral-obscuring position; but so long as the till-cover remains open any shutter displaced by operating a mechanism will remain displaced when the other mechanisms are operated. For example, in the machine as illustrated, if the salesman wishes to register a sale, say eight dollars and seventy-eight cents, and he finds a previous sale of, say, fifty cents is registered on the dial, he will, for example, register on the mechanism corresponding to the dollar-dial 5^{a} the numeral "8." The effect of this operation will be to obliterate the indication of "50" on the central mechanism and release the till-cover, so that it may open. The salesman next registers "70" on the central mechanism, the numeral "8" remaining visible, as the bridge 29 on the mechanism previously operated has been dropped. Then he completes the registration of the sale by registering "8" on the mechanism at the right. The indicator now shows "8 70 8" and the till-cover is open. The closing of said cover in order to unlock the pins 7 elevates and resets the bridges 29, so that when the next registering operation is begun the auxiliary tumblers 26 will be freed and the shutters instantly returned to their normal erect positions, thus obliterating the indication of the last operation.

It is sometimes desirable to open the till without a registering operation, and this I provide for by securing an arm 35 on the rock-shaft 17, which carries the locking-arm 14, adjacent to one end of the cabinet or casing, (see Figs. 2 and 3,) and by providing a key-hole 36 in this end of the casing to receive a suitable pin or key 37. By inserting this key, as seen in Fig. 2, and prying up the arm 35 the arm 14 may be lifted and the till-cover opened.

In order to lock the mechanisms so that they cannot be operated by means of the pins 7, I employ the mechanism best seen in Fig. 2. This device comprises an ordinary lock 38,

secured to the inner face of the end of the casing and provided with a bolt 39. This may be a common form of Yale lock. On an upright 40 is fulcrumed a lever 41, one arm of which is in the path of the bolt 39 and the other arranged to take behind the arm 24, which is next that end of the casing. The lever 41 is so placed with respect to the bolt 39 and arm 24 that when the bolt is protruded by the key of the lock it impinges on the arm of the lever and turns the latter until the other arm thereof applies itself close to the arm 24. Consequently any attempt to press back either of the locking-frames 13 is resisted by the lock-bolt 39 through the lever 41 and arms 24, which latter are all connected so that they must move back together. Thus one lock serves to prevent the operation of all of the indicating and registering mechanisms, however many there may be.

The device for printing on a ticket or card numerals corresponding to the amount of a sale registered is best illustrated in Figs. 7 and 7^a, the former being a face view and the latter an edge or side view.

On the edge of the numeral-disk 8 are types 42, one type opposite to or corresponding with each indicating-numeral marked on the face of said disk, and these types are capable of printing, when inked, the corresponding numerals on a card or sheet of paper. Directly under the center of each disk 8 is mounted a rocking card-holder or platen 43, in which a card may be inserted from the front of the machine and be pressed up into contact with the type on the disk 8 at this point by pressing down upon the outer projecting end of the rocking platen. The platen has elevated side margins and an inner end margin to form a recess in its upper face (see Fig. 7) to properly receive and register the card, and there is an opening in the front of the register-casing just above the inserted platen at which to insert the card. There may be a spring under the outer end of the platen, or the latter may be made sufficiently heavy at its inner end to fall away by gravity from the type after the pressure is removed.

As the numeral corresponding to the sale is at the top of the disk 8 and exhibited at the sight-aperture 12 and the corresponding type must be at the bottom of the disk, it follows that the respective arrangements of indicating-numerals on the face of the disk and printing-types on the edge thereof will be reversed—that is, when the indicating-numeral "8" is at the sight-aperture the type "8" will be in position to print on a card supported by the platen.

The types will be inked by a roller 44, of suitable material, mounted on the frame, substantially as shown.

To accommodate the printing of dollars and cents on the same card, the rocking platen may be set relatively to the disk 8, so that the dollars will be printed at the left center of the card, the five cents or multiples thereof will be printed at the center, and the odd cents will be printed at the right center, thus placing the printed numerals on the card in the order "8 70 8."

I have not described the mechanism for ringing a gong at each operation; for locking the operating-disk on its spindle, so that it can rotate thereon, but not be pulled off; for exhibiting index-numerals at the back as well as the front of the casing; for registering the sales, &c., as all of these features, while employed in my present machine, are fully shown and described in my former patent.

The construction herein described may be changed to some extent without departing materially from my invention. For example, I show the cam 31 on the till-cover, the bolt 30, the upright $30^\times$, and the dog 33 for supporting the bolt 30 as doing also the duty of elevating and supporting the bridge 29 through an operating-rod 34; but it will be obvious to any skilled mechanic that the bridge might be elevated and supported by independent mechanism of the same character as that above described.

The device for supporting the locking-arm 14 in its elevated inert position until the till-cover is closed is not essential to the operation of the machine, but is rather in the nature of a precautionary device to prevent the locking-arm from dropping back after a registering operation and locking the cover closed should the operator hold the till-cover against opening inadvertently or purposely.

Having thus described my invention, I claim—

1. In a cash register and indicator of the type herein shown, the combination with a plurality of substantially like indicating and registering mechanisms set in a single casing and having a till and till-cover in common, of the said till-cover provided with a locking-shoulder and a spring to throw it open, a rock-shaft 17, provided with a locking-arm 14 and operating-arms $14^\times$, pendent bolts 16, engaging the several arms, means for lifting said bolts at each operation of the mechanisms, whereby the till-cover is unlocked by either of the several mechanisms in the casing, and means, comprising an arm 35 on said rock-shaft and a key adapted to be inserted through a keyhole in the register-casing, for operating said arm and releasing the till-cover independently of the indicating and registering mechanisms.

2. In a cash register and indicator of the type herein shown, the combination with the till-cover provided with a locking-shoulder, the hinged locking-arm 14, adapted to engage said shoulder when the till is closed, and lifters for lifting and dropping said arms at each operation of the machine, of an automatically-operated support for said arm which holds it elevated until the till-cover is closed, said support being tripped by the cover in closing, as set forth.

3. In a cash register and indicator of the

type herein shown, the combination with the till-cover provided with a locking-shoulder, the hinged locking-arm 14, adapted to engage said shoulder when the till is closed, and lifters for lifting and dropping said arms at each operation of the machine, of an automatically-operated support for said arm which holds it elevated until the till-cover is closed, said supporting device comprising a rocker 18, adapted to take under the locking-arm, the spring 19, which automatically sets the rocker in the supporting position when the arm is lifted, and the pendent trip, 21, on the rocker adapted to engage the till-cover when the latter is closed and rotate the rocker back to its normal position.

4. In a cash register and indicator of the type herein shown, the combination with the casing, the till therein, the till-cover pivotally mounted therein, and the operating-spring of said cover, of the dash-pot 4, mounted in the casing back of the till, the piston $4^{\times}$, provided with a stem 4^{a}, fulcrumed on the till-cover, the end 4^{b} of said stem being held up to the cover by a spring 4^{c}, and the said spring, whereby the piston, when it enters the dash-pot, is adapted to adjust itself thereto.

5. In a cash register and indicator of the type herein shown, having a plurality of substantially like indicating and registering mechanisms, each having a tilting, locking-frame, 13, a tumbler 9, an auxiliary tumbler 26, a shutter 11, carried by said auxiliary tumbler, and a latch connecting the tumblers 9 and 26 of each mechanism, of a rock-shaft 23, extending through all of the mechanisms, arms 24 on said shaft, each arm having a part which takes behind one of the tilting frames 13, a bridge 29, hinged to each arm 24, and adapted when elevated to bridge the space between said arm and the tumbler-latch, whereby said bridge frees the auxiliary tumbler when the frame 13 is pressed back, means for elevating and supporting said bridges when the till-cover is closed, and means for releasing said bridges and allowing them to fall when the frames 13 are pressed back.

6. In a cash register and indicator of the type herein shown having a plurality of indicating and registering mechanisms in a common casing, each of which has a tilting frame 13, of means for locking all of said mechanisms against operation by a single lock, said means comprising a rock-shaft 23, arms 24 on said shaft which bear on the rear faces of the respective frames 13, a lock 38, on the casing, having a bolt 39, and a lever 41, between said bolt and one of the arms 24, one of the arms of said lever taking behind the arm 24, and the other being arranged in the path of the bolt 39, in such relation that when said bolt is protruded it resists the backward movement of the frame 13.

7. The combination with the casing having a keyhole 36, of a spring-actuated till-cover in the casing, a rock-shaft 17, a locking-arm 14, on said shaft, adapted to lock the till-cover when closed, an arm 35 on the shaft 17 adjacent to the keyhole, and a key adapted to act on said arm 35 and rock the shaft 17.

In witness whereof I have hereunto signed my name in the presence of two subscribing witnesses.

ELMER S. SMITH.

Witnesses:
HENRY CONNETT,
A. BELL MALCOMSON.