Dec. 27, 1949 M. F. ROYSTON 2,492,186

REPRODUCER FOR HILL AND DALE AND LATERAL CUT PHONOGRAPH RECORDS

Filed July 23, 1946 2 Sheets-Sheet 1

FIG. 1

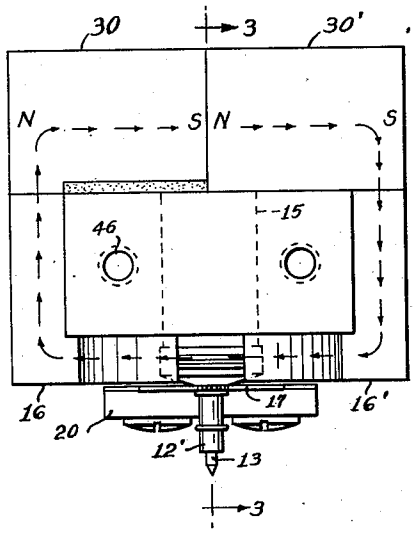

FIG. 2

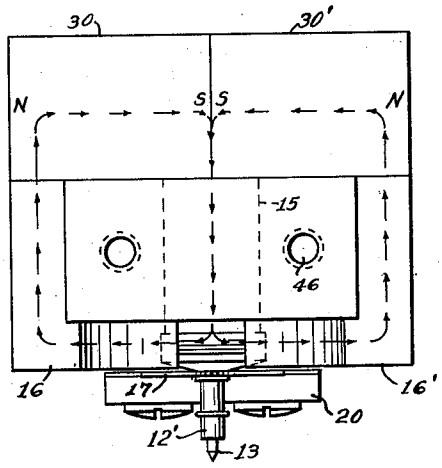

FIG. 3

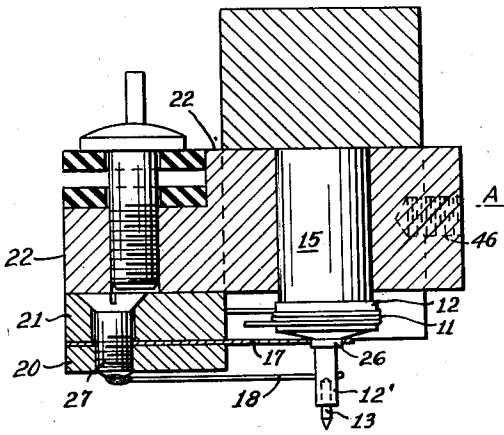

FIG. 4

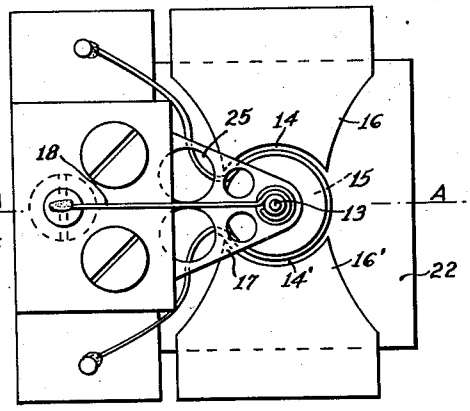

FIG. 5

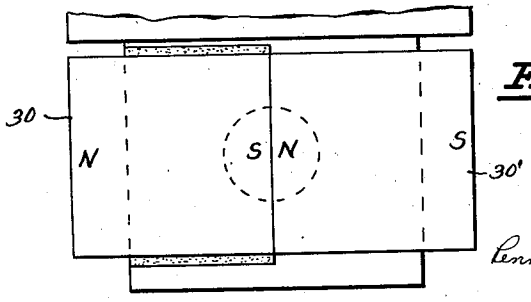

INVENTOR
Marvin F. Royston
BY
Lennie, Edmonds, Morton and Barrows
ATTORNEYS

Fig. 6

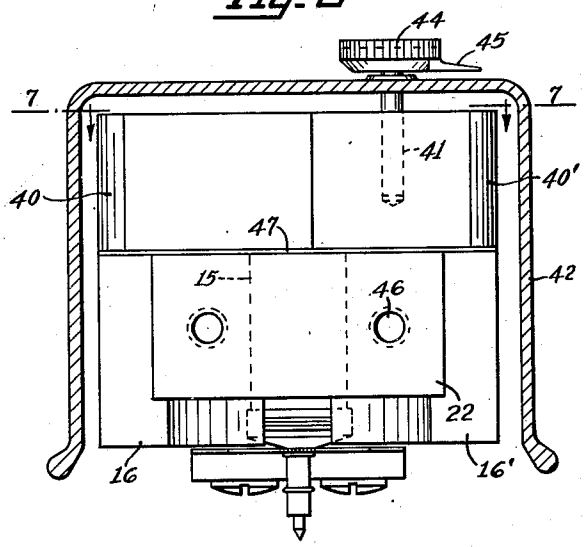

Fig. 9

Fig. 7

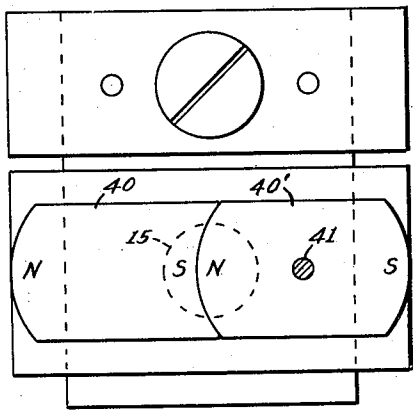

Fig. 8

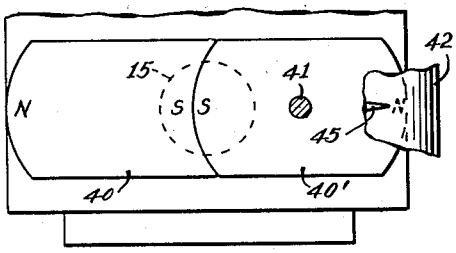

INVENTOR
Marvin F. Royston
BY
Lennie, Edmonds, Morton and Barrows
ATTORNEYS

Patented Dec. 27, 1949 2,492,186

UNITED STATES PATENT OFFICE

2,492,186

REPRODUCER FOR HILL AND DALE AND LATERAL CUT PHONOGRAPH RECORDS

Marvin F. Royston, Poughkeepsie, N. Y., assignor to American Type Founders, Incorporated, Elizabeth, N. J., a corporation of New Jersey

Application July 23, 1946, Serial No. 685,593

5 Claims. (Cl. 179—100.41)

1

This invention relates to electromagnetic reproducers for phonograph and like records comprising mechanically produced sound tracks and it refers, more particularly, to convertible reproducers which may be conditioned for use with either vertically or laterally cut sound tracks.

It is an object of the invention to provide a reproducer which may be readily arranged to play either vertical or lateral recordings and which has an improved frequency response characteristic in both arrangements thereof, due, respectively, to the low mass of its moving system and the low moment of inertia thereof about the effective axis of torsional vibration.

Another object is to provide a reproducer which is convertible for use with either vertical or lateral recordings by an adjustment of the magnetic circuit thereof.

Another object is to provide a convertible reproducer for playing both lateral and vertical recordings which has a moving system of no greater mass or moment of inertia than is required in a similar moving system of a reproducer for playing either type of recording alone.

A further object is to provide a method of converting an electromagnetic reproducer, excited by permanent magnet means, from an arrangement suitable for playing vertically cut records to one suitable for playing laterally cut records, and vice versa, which involves a rearrangement of said permanent magnet means only, without switching of the electrical circuits of the reproducer.

Two general types of convertible reproducers have been proposed and used heretofore, one of which employs a pair of laterally spaced coils respectively moving in spaced magnetic fields, and the other of which employs a pair of coaxial coils moving in the same magnetic field. In both types conversion from one use to the other is effected by switching the connections to the two coils to cause the respective voltages induced therein to be in aiding relationship for the particular condition under which the reproducer is used.

The arrangement of the present invention obviates the need for dual coils and switching connections thereto and thereby permits a reduction in the mass and moment of inertia of the moving system of the reproducer. This is accomplished by provision for altering or adjusting the magnetic circuit of the reproducer for conversion purposes, whereby the voltages developed in different portions of a single coil may be caused to be in aiding relation responsive either

2

to linear vibration along the axis of the coil, when vertically cut records are played, or to oscillation about an axis normal to the coil axis, when laterally cut records are played.

Lowered moving mass and moment of inertia resulting from the single coil moving system of the invention in comparison with the dual coil systems of prior art permit higher compliances, both linear and torsional, to be employed and an improved high frequency response to be attained thereby. Wear of the sound groove and stylus are also reduced.

The moving system, and resilient support therefor, employed in the reproducer of the present invention, as illustrated herein, may be similar to that disclosed in my copending application Serial No. 674,456, filed June 5, 1946.

The invention will be better understood from consideration of the following detailed description, with reference to the appended drawings in which:

Fig. 1 is an enlarged side elevational view of one embodiment of the convertible reproducer of the invention, showing the arrangement thereof for playing lateral recordings;

Fig. 2 is a similar elevational view showing the arrangement of the reproducer of Fig. 1 for playing vertical recordings;

Fig. 3 is a section along the line 3—3 of Fig. 1;

Fig. 4 is a bottom plan view and

Fig. 5 is a partial top plan view of the reproducer of Fig. 1;

Fig. 6 is an enlarged side elevational view of a modification of the reproducer of Fig. 1, assembled in a housing shown in section;

Fig. 7 is a section along the line 7—7 of Fig. 6, showing the reproducer permanent magnets arranged for playing lateral recordings;

Fig. 8 is a fractional view generally similar to Fig. 7, showing the arrangement of the permanent magnets for playing vertical recordings and showing an index adjacent the reproducer housing; and

Fig. 9 is an elevational view of the coil support of the reproducer, shown approximately full size.

In Figs. 1 to 5, representing one embodiment of the convertible reproducer of the invention, all of which figures are greatly enlarged for clearness of illustration, a moving system and suspension therefor are shown similar to that disclosed in copending application Serial No. 674,456, referred to above. The single pick-up coil 11 comprising, for example, 30 or 40 turns of No. 44 B. & S. gauge enameled copper wire is supported on a cup-shaped portion of a light coil support

12, preferably of aluminum, having a cylindrical extension 12′ along the coil axis which carries the reproducing stylus 13. Fig. 9 shows coil support 12 approximately full size, from which an idea of the size of the other parts and of the assembly of the reproducer may be gained.

Coil 11 is disposed principally within annular air gaps 14, 14′ formed between a central cylindrical core 15 and the tips of pole pieces 16, 16′, respectively. Both core and pole pieces are of material having good magnetic permeability, such as soft iron.

The suspension for coil support 12 is constituted by a pair of substantially parallel cantilever springs 17 and 18 spaced apart in the direction of the axis of support 12 and coil 11 thereon. Upper spring 17 is a leaf spring, for example, of .003 inch steel, clamped at one end between clamping plate 20 and spacer 21 fixed to supporting member 22 of non-magnetic material, such as grass, which is pressed over core 15 and extends laterally beyond pole pieces 16, 16′ in both directions. Spring 17 is preferably of triangular form in the free portion thereof and has holes 25 formed therein to decrease the mass and adjust the compliances thereof. At its free end, spring 17 is attached to extension 12′ of coil support 12 by being pressed over a shoulder 26 on the coil support, the spring having a hole suitable for this purpose. The edge of shoulder 26 is then spun or peened over to effect a firm attachment.

Spring 18 may be constituted by a piece of steel music wire, for example, .004 inch in diameter, which is fixed to stationary means, as by soldering to the end of a screw 27 projecting beyond clamping plate 20, with clearance between the wire and plate. At its free end spring 18 is attached to coil support extension 12′ by being closely coiled thereabout.

The principal axes of springs 17 and 18, respectively, are substantially parallel to the axis of symmetry of air gaps 14, 14′ and intersect the axis of coil 11 substantially normally thereto. The compliance of spring 18 for linear displacements in all directions except along the principal axis thereof is relatively high, as is also the torsional compliance. The compliance of spring 17 is relatively high for linear displacements along the coil axis but relatively low for other linear displacements. Due to the low lateral compliance of spring 17, when stylus 13 is oscillated transversely of the principal axis of this spring, as in following the sound track of a laterally cut record, coil 11 is oscillated substantially about the principal axis of spring 17, which thus becomes the effective axis of torsional vibration of the moving system. Spring 18 serves chiefly to hold the coil axis vertical by resisting the drag of the sound groove on the stylus.

For exciting magnetic flux in air gaps 14, 14′ there is provided a pair of permanent magnets 30, 30′ of high coercive force material, such as "Alnico V." Magnet 30 extends between core 15 and pole piece 16 and may be cemented to support 22. Magnet 30′ extends between core 15 and pole piece 16′ and is preferably held in place only by magnetic attraction. The polarity of the permanent magnets is indicated in the figures.

In the arrangement of the reproducer for playing laterally cut records, illustrated in Fig. 1, adjacent ends of magnets 30, 30′ are of unlike polarity and the flux path is as indicated by the arrows. In this arrangement little or no flux

passes through core 15 and the flux supplied to gaps 14, 14′ is in the same direction in both gaps. When, therefore, coil 11 is oscillated about the principal axis of spring 17 by the lateral vibration of stylus 13 in the playing of a record, the axial components of the displacements of the two portions of the coil in gaps 14, 14′, respectively, have opposite directions. The voltages respectively generated in these coil portions are therefore additive around the coil. Any voltages due to axial displacement of the stylus are in opposition in the two coil portions referred to and so cancel one another.

By reversing the position or polarity of magnet 30′ so that adjacent ends of the two permanent magnets are of like polarity, as shown in Fig. 2, the flux follows parallel paths, indicated by the arrows. The flux in this case is in opposite directions in gaps 14, 14′. This is the arrangement for playing vertically cut records. Up and down or axial vibration of stylus 13 by contact with the sound groove of a record of this type causes the portions of coil 11 disposed in gaps 14, 14′, respectively, to move in the same axial direction and therefore the voltages respectively generated therein are again in aiding relation around the coil. Voltages due to lateral variation of the sound groove which cause twisting of coil 11 about the axes of spring 17 are in opposition in the coil portions respectively disposed in the two gaps, and so cancel out.

The modification of the invention shown in Figs. 6–8 provides means for readily effecting the reversal of one of the exciting permanent magnets of the reproducer. In this modification magnet 40′, corresponding to magnet 30′ of the previously described arrangement, is centrally pivoted by attachment to a shaft 41 journaled on the reproducer housing 42, which may be a part of the tone or reproducer arm of a phonograph. Magnet 40′ may then be reversed in position and thereby reversed in polarity relative to magnet 40, corresponding to previously referred to magnet 30, by rotation of shaft 41. For this purpose shaft 41 carries a knob 44 with a pointer 45 to indicate the condition of the reproducer.

The two ends of magnet 40′ and the end of magnet 40 adjacent thereto are preferably cylindrical surfaces coaxial with shaft 41 so that the gap between adjacent ends of the magnets may be reduced to a minimum. To reduce friction in the rotation of magnet 40′ a thin shim 47 of dissimilar material, preferably non-magnetic, may be introduced between core 15, pole pieces 16, 16′ and the magnets, or one or both of the rubbing surfaces may be plated, as with chromium. Tapped holes 46 may be provided in support 22 in order to secure the reproducer in a housing or to attach it to other supporting means.

The magnetic circuit and the variations thereof are the same in the modification of Figs. 6–8 as in the modification of Figs. 1–5 and may readily be traced by the arrows in Figs. 1 and 2.

There has been disclosed herein a convertible electromagnetic reproducer adaptable to play either vertically cut or laterally cut records. The conversion from one use to the other is effected by a change of path of the exciting magnetic flux, the single moving coil being unchanged in either its mechanical or electrical aspects.

It will be understood that various modifications of the invention not shown or described herein may be made within the spirit of the invention

and that, therefore, the scope of the invention is limited only by the appended claims.

I claim:

1. In an electromagnetic reproducer for phonograph and like records, a pick-up coil, a suspension for said coil permitting both linear vibration thereof along the coil axis and torsional vibration thereof about an axis perpendicular to the coil axis, a stylus operatively connected to said coil, said stylus being adapted to actuate the coil according to said linear and torsional modes of vibration while following vertically cut and laterally cut sound tracks, respectively, and a pair of permanent magnets and associated magnetic circuit means for producing substantially constant magnetic flux intersecting portions of said coil oppositely disposed relative to said axis of torsional vibration, the relative polarity of said two magnets being adjustable to control the relative directions of the flux intersecting said two coil portions.

2. In a convertible electromagnetic phonograph reproducer, a pick-up coil, suspension means for said coil having a linear mode of vibration along the coil axis and a torsional mode of vibration about an axis adjacent the coil and intersecting the coil axis normally thereto, and a pair of permanent magnets and associated magnetic circuit for creating a substantially constant magnetic field intersecting portions of said coil respectively oppositely disposed relative to said axis of torsional vibration in a direction normal to both said longitudinal and pivotal coil axes, the relative polarity of said two magnets being reversible to reverse the sense of said field at the intersection thereof with one, only, of said opposite coil portions.

3. In a convertible electromagnetic phonograph reproducer, a pick-up coil, a resilient suspension adapting said coil for axial and torsional vibration, the effective axis of torsional vibration being adjacent the coil and intersecting the longitudinal axis of the coil normally thereto, and magnetic circuit means for producing flux cutting said coil comprising a central core, a pair of pole pieces having end portions thereof respectively spaced from said core to form therewith a pair of annular air gaps in which said coil is located, said two gaps being symmetrical about an axis parallel said torsional axis of vibration, a pair of permanent magnets for creating a magnetic field in said air gaps, said magnets respectively connecting said core and said pole pieces at the ends thereof remote from said gaps, and means for reversing the position of one of said magnets relative to said core and pole pieces to reverse the direction of the magnetic field in one of said gaps.

4. In a convertible electromagnetic phonograph reproducer, a pick-up coil, a stylus, support means connecting said coil and stylus, a resilient suspension for said coil and stylus adapted and arranged to cause axial and torsional vibration of said coil upon vibration of said stylus along and transverse the coil axis, respectively, said torsional vibration occurring about an axis perpendicular to the coil axis, a magnetic structure supplying flux for coaction with said coil comprising a central core, pole pieces oppositely laterally spaced therefrom, corresponding terminal portions of said core and pole pieces forming a pair of gaps in which said coil is disposed, and a pair of permanent magnets respectively joining terminal portions of said core and pole pieces opposite said gaps each having poles of opposite polarity respectively adjacent said members joined thereby, and means for rotating one of said magnets about an axis intermediate said opposite poles thereof to reverse the polarity of said one magnet relative to said other magnet and thereby reverse the flux in one of said gaps.

5. In a convertible electromagnetic phonograph reproducer, a supporting block of non-magnetic material, a pair of pole pieces extending from the top of said block downwardly along the vertical lateral sides thereof and having pole tips extending inwardly along the bottom surface thereof, a central cylindrical magnetically permeable core secured vertically in said block and extending from the top thereof downwardly between said pole tips to provide a pair of annular air gaps, a pickup coil, a stylus, a support connecting said coil and stylus, a resilient suspension for said support attached to said block and disposing said coil around said core in said annular air gaps, said resilient supension comprising an upper leaf spring and a lower wire spring adapted and arranged to allow axial and torsional vibration of said coil upon vibration of said stylus along and transverse the coil axis, respectively, said torsional vibration occurring about an axis perpendicular to the coil axis, and a pair of permanent magnets on top of said supporting block joining respective pole pieces and said central core, one of said magnets being affixed to said block, and means for reversing the position of the other magnet to reverse the direction of the magnetic field in one of said gaps.

MARVIN F. ROYSTON.

REFERENCES CITED

The following references are of record in the file of this patent:

UNITED STATES PATENTS

Number	Name	Date
2,027,169	Harrison	Jan. 7, 1936
2,347,347	Yenzer	Apr. 25, 1944