Dec. 19, 1950 G. E. FRANCK 2,534,510

UNITARY FLARING TOOL

Filed Aug. 10, 1948

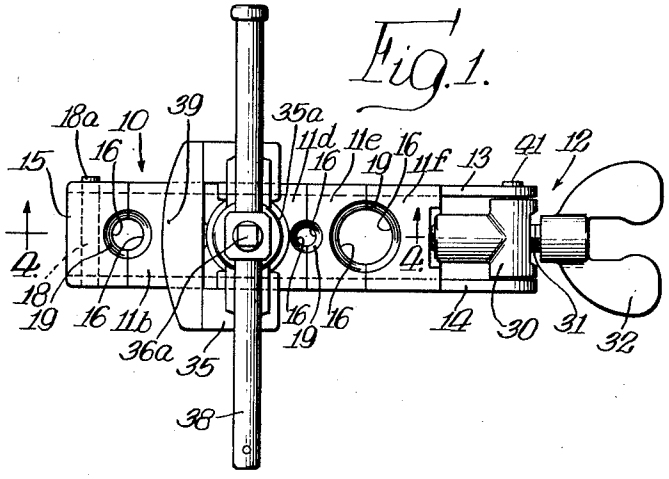

Fig. 1.

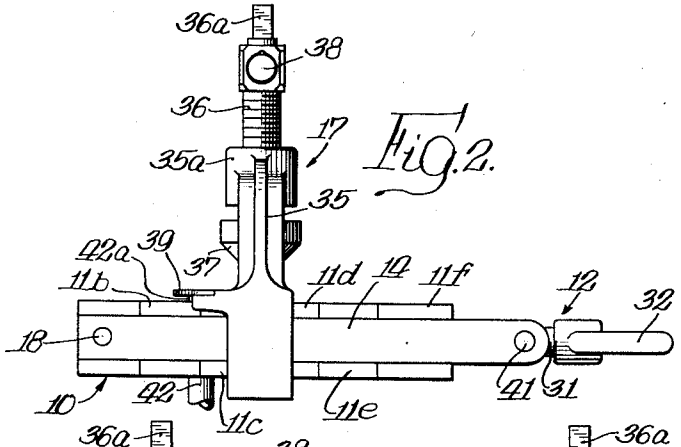

Fig. 2.

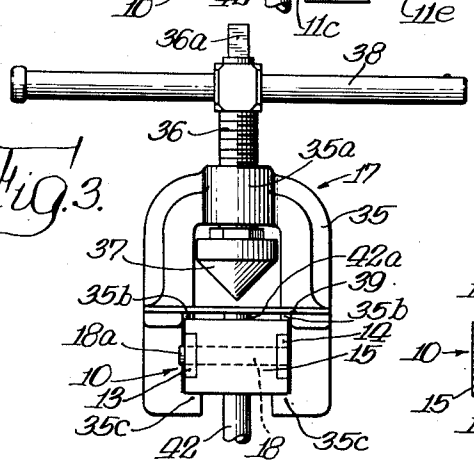

Fig. 3.

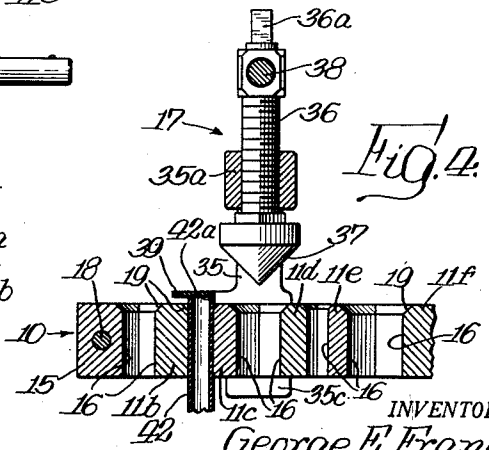

Fig. 4.

INVENTOR.
George E. Franck,
BY
Christton, Schroeder, Merriam & Hofgren
his Attys.

Patented Dec. 19, 1950 2,534,510

UNITED STATES PATENT OFFICE

2,534,510

UNITARY FLARING TOOL

George E. Franck, Riverside, Ill., assignor to The Imperial Brass Manufacturing Company, Chicago, Ill., a corporation of Illinois

Application August 10, 1948, Serial No. 43,506

2 Claims. (Cl. 153—79)

1

This invention relates to a flaring tool, and more particularly to a unitary flaring tool having clamping means and a pressure member for flaring the end of a tube.

Flaring tools as a rule are carried in a kit together with many other tools, and it is desirable that the tool be of unitary construction in the sense that all parts of the tool are joined together in such manner that they will not become separated as the user, who is usually an installation man or repair man, travels from place to place. Furthermore, it is desirable that the workman be able to reach into his kit and bring out the entire tool and not have to search in his kit for various parts of the complete tool.

It is, therefore, a general object of the invention to provide a new and improved unitary flaring tool in which the pressure member which comprises the flaring means is carried on the means for clamping the tube and may not be inadvertently separated therefrom.

If tubes having ends which are flared by means of flaring tools such as are described herein are to form a fluid-tight connection with a fitting or coupling and if the flares are to conform to the standards set up by the Society of Automotive Engineers, the flares given the tube must have certain dimensions which, of course, vary with the diameter of the tube being flared. To obtain a flare of proper dimensions, the tube must bear a certain relationship to the means in which it is clamped. Some users of a flaring tool through ignorance, and many more through carelessness, do not clamp the tube in the proper relationship to the clamping means and a flare of improper dimensions results.

While gauges have heretofore been provided for determining the proper relationship of the tube and clamping means, the use of the gauges has slowed down the flaring operation since such gauges are independent of the flaring means and it has been necessary to move the gauge into and out of operative position independently of and without reference to the positioning of the flaring means, thereby increasing the number of operations in flaring a tube.

It is a further object of this invention to provide a unitary flaring tool wherein a gauge for determining the position of the tube to be flared in the clamping means is movable with the pressure member.

A more particular object of the invention is to provide a unitary flaring tool wherein a yoke which is slidable on the clamping means carries both the pressure member for forming the flare

2

and a gauge for determining the position of the tube to be flared in the clamping means, and wherein the tool is provided with stop means for limiting the sliding movement of the yoke on the clamping means and for preventing separation of the yoke from the clamping means.

Other objects and advantages will become apparent from the following detailed description taken in connection with the accompanying drawings in which:

Fig. 1 is a top plan view of my improved unitary flaring tool;

Fig. 2 is a side elevational view of the flaring tool with the gauge shown properly positioning a tube inserted in the clamping means;

Fig. 3 is an end view looking from the left of Fig. 2; and

Fig. 4 is a fragmentary section through the tool along the line 4—4 of Fig. 1.

While the invention is susceptible of various modifications and alternative constructions, it is shown in the drawings and will hereinafter be described in a preferred embodiment. It is not intended, however, that the invention is to be limited thereby to the specific disclosures made. On the contrary, it is intended to cover all modifications and alternative constructions falling within the spirit and scope of the invention as defined in the appended claims.

As shown in the drawings for purposes of disclosure, the tool comprises generally a carrier 10 of elongated form to permit "in line" arrangement of tube receiving bores or recesses; the actual tube clamping or gripping means which comprise a plurality of blocks 11b–11f; means designated generally at 12 for applying a longitudinal force, herein a thrust, for causing the blocks to perform their tube clamping function; and means generally designated at 17 for positioning and flaring the tube, including a slide member on which the flaring and positioning devices are carried.

In the embodiment illustrated the carrier or support 10 takes the form of a narrow, very elongated U having a pair of legs 13 and 14 which are held in spaced parallel relationship by a spacing block 15 forming the closed end of the U and to which the legs are affixed by a pin 18. Inasmuch as the carrier 10 is subjected to a longitudinal force during the clamping of a tube, the strips composing the legs may be of relatively small cross sectional area and still provide the necessary strength to withstand any stress to which the carrier normally is subjected. The length of the carrier 10 is determined primarily

by considerations of convenience in handling by the workman, the necessity normally to provide clamping means for a given number of sizes of tubes, and similar considerations.

The actual clamping of the tubes in the clamping means is effected not by the legs 13 and 14 but by the blocks 11b–11f and the spacer block 15. The fact that six blocks are shown is of course merely an arbitrary choice and the number of blocks might be increased or decreased if desired. Each block is generally rectangular in transverse section and is at each end formed with a channel for the reception therein of legs 13 and 14. The blocks 11 are thus slidable longitudinally of the carrier 10 and the width of the channel is preferably so dimensioned as to provide a sliding but close fit on the edge faces of the legs 13 and 14. The depth of the channel, however, is preferably made somewhat greater than necessary so as to provide a degree of play between the blocks 11 and the legs 13 and 14 to permit longitudinal shifting of the blocks and some degree of angular play or displacement of the blocks so that the blocks are self-centering or self-aligning when a tube is clamped. Furthermore, such construction facilitates the manufacture of the apparatus since the tolerances are not so close as would otherwise be required.

Not only are the blocks 11 all preferably of the same dimension transversely of the carrier, but they are also preferably all of the same dimension longitudinally of the carrier which dimension will herein be termed the width of the blocks. As fully disclosed in my co-pending application for "Tube Clamping Means" filed May 4, 1946, as Serial No. 667,386, issued April 25, 1950, as Patent No. 2,505,665, this uniformity in width is made possible despite the variation in size of the bores in which various sized tubes are clamped by the position and relative placement of the different diameter bores in the blocks. These bores for receiving the various sized tools are composed of complementary generally semi-cylindrical recesses 16 formed in abutting faces of adjacent blocks. While these recesses are referred to as being generally semi-cylindrical, they are actually preferably very slightly out of round with the transverse diametric dimensions of the resulting bore a few thousandths of an inch larger than the longitudinal dimension. This prevents scoring of the tube at the lines of juncture of the two complementary recesses.

With the exception of the end blocks 15 and 11f which, of course, each have only one recess 16 formed therein, each of the intermediate blocks has a recess formed in each side face in order that the number of blocks required may be a minimum for the number of bores provided, this being made possible by an association of the recesses in inverse order to their relative sizes. Thus the second block from the right as seen in Fig. 1 has formed in one face the largest recess (which is complementary with the recess in the end block 11f to form the largest bore), and in the other face the smallest recess; the third block has formed therein the remaining smallest recess and one of the second largest recesses; the fourth block has the remaining second largest recess and one of the second smallest recesses. This arrangement is continued regardless of the number of blocks, and as seen in Figs. 1 and 4 the recesses in abutting faces of the blocks form, when in abutting relationship, a plurality of bores which are generally cylindrical in shape with the exception of a countersunk portion 19 at one end of each bore, so that it may be said that each bore has a countersunk portion and a generally cylindrical portion. As may be seen in Fig. 4 the countersunk portions 19 extend into the respective bores a depth which varies directly with the diameter of each bore. For example, the countersunk portion of the largest bore at the right hand end of the clamping tool as seen in Fig. 4 is of greater depth than the countersunk portion in any of the other bores, and this depth varies directly with the diameter of the respective bores, being shallowest in the smallest bore.

The clamping force generating means 12 for exerting a longitudinal force causing the blocks to grip a tube inserted therebetween in one of the bores comprises a screw device pivotally mounted to be swung to an operating position longitudinally of the carrier 10 as illustrated or to a position transversely of the carrier to permit separation of the blocks for the reception or withdrawal of a tube. The screw device is illustrated as comprising a T-shaped body member 30 having reduced portions at the ends of the cross bar of the T forming trunnions which are received in apertures near the ends of the legs 13 and 14. The stem portion of the T-shaped body member is tubular and is internally threaded to receive a bolt 31 having rigid therewith at its outer end a wing nut 32. The inner end of the bolt is preferably rounded as shown in Fig. 1, and the block 11f engaged by the end of the bolt is recessed to receive the bolt and may have a detent therein for engagement by the end of the bolt.

The means 17 include a yoke 35 formed with a channel for engaging the clamping means 10 as shown in Fig. 3, the yoke being slidable longitudinally of the carrier and blocks. The upper body portion 35a has a threaded aperture therethrough for carrying a pressure member adapted to exert force axially of the bores for flaring the end of the tube. In the structure illustrated the pressure member comprises a stud 36 threaded into the aperture through the body portion 35a of the yoke, and carrying at its lower end a conical operating head 37 for flaring the end of the tube. The upper end of the stud 36 is preferably formed of square cross section as shown at 36a and is fitted with a handle 38.

While the tube clamping means 10 and the flaring means above described are each, when considered alone, generally old, an important feature of my invention resides in a novel arrangement combining the clamping means and the flaring means to provide a unitary flaring tool and to provide means for properly positioning a tube to be flared in the clamping means. In order to achieve these ends the yoke 35 is so mounted that it is directly in engagement with the clamping blocks and is slidable therealong longitudinally of the clamping means but it not subject to "play" or angular movement having any rotational component with respect to the clamping means, but maintains a predetermined relationship to the upper surface of the clamping blocks for a purpose to be hereafter described. A close sliding fit between the yoke 35 and the clamping blocks is insured by making the channel only slightly larger than the horizontal transverse dimension of the blocks as shown in Fig. 3 and by providing upper and lower shoulders 35b and 35c, respectively, which define the vertical dimension of said channel, these shoulders being spaced so that they en-

gage the upper and lower surfaces of the blocks and insure that there is no play or angular movement having any rotational component between the yoke and the blocks, the yoke maintaining accurately a predetermined position relative to the plane of the upper surface of the blocks.

In order to prevent the yoke **35** from being inadvertently removed from the flaring tool I provide stop means for limiting the longitudinal movement of the yoke. This stop means comprises members projecting transversely from the carrier adjacent opposite ends thereof. In the apparatus illustrated a projecting member **18***a* is shown near one end of the carrier while a projecting member **41** is shown adjacent the pivotal mounting of the longitudinal force exerting means **12**. In the apparatus illustrated the member **18***a* comprises an extension of the pin **18** and the member **41** comprises an extension of the trunnion which mounts the member **30**.

A flare gauge **39** is carried on the yoke **35** and extends across the top of the blocks **11**, being spaced a short distance therefrom as shown in Figs. 2, 3 and 4. This gauge is similar in function to the gauge disclosed in my co-pending application entitled "Clamping Means for Flaring Tools or the Like," filed November 18, 1946 as Serial No. 710,706, issued April 25, 1950, as Patent No. 2,505,666, but in the improved tool disclosed herein the gauge is movable with the flaring means and is preferably integral with the yoke **35**. The flare gauge acts as a stop for a tube inserted in one of the bores, the gauge being movable longitudinally of the carrier so that it is selectively positionable over any of the bores, and when positioned over a bore the gauge determines the extent to which a tube may be inserted in the clamping means in order to obtain a flare comforming to SAE standards. Since the yoke is mounted for sliding movement without play and since the gauge is integral with the yoke, the distance from the upper surface of the blocks **11** to the yoke is always the same and a tube to be flared may be accurately and properly positioned before it is clamped in one of the bores. The distance from the cylindrical portions of the bores to the bottom surface of the gauge in order to obtain a proper flare varies, of course, with the size of the tube. This variance is taken into account by the various sizes of the countersunk portions **19**, the distance from the flare gauge to the top of the cylindrical portion of the bores varying for each bore of different diameter.

In the operation of the device the wing nut **32** is turned to release the block and the entire apparatus **12** may if desired be pivoted on its trunnions to permit separation of the blocks **11** and a tube of the proper size is inserted in one of the bores, in the apparatus illustrated a tube **42** being inserted in the second smallest bore between the blocks **11***b* and **11***c*. The yoke **35** is then moved longitudinally of the carrier until the flare gauge **39** is immediately over the end **42***a* of the tube and the tube is inserted until its end **42***a* strikes the flare gauge **39**. With the apparatus in this position the means **12** are swung to the position shown in Fig. 1 and the wing nut **32** is turned to exert a force on the blocks and clamp the tube in the bore. The yoke **35** may then be slid longitudinally of the carrier until the conical operating head **37** is over the tube, and by turning the handle **38** the end of the tube may be flared. The operation which places the gauge in position also moves the pressure member to a position adjacent the tube to be flared, and the operation which places the pressure member in operating position also moves the gauge out of the way. The gauge **39** in cooperation with the particular depth of the countersunk portion of the chosen bore insures that the tube will be properly positioned to produce a flare in accordance with SAE specifications. After the tool is used and is returned to a kit or tool bag it is impossible for the yoke to slide off of the carrier since the stop members **40** and **41** limit the longitudinal movement of the yoke with respect to the carrier, and the unitary structure of the apparatus is thus retained. It may be desirable in some instances to provide a structure in which the handle **38** is removable from the stud **36** so that the handle may be used as a wrench with other tools.

I claim:

1. In a tube working tool, an elongated tube clamping means having a plurality of bores arranged in a line, each bore having a different diameter and each bore having a generally cylindrical portion and a conical counter-sunk portion extending from one face of said clamping means into the bore a depth directly proportional to the diameter of the bore, a slide member mounted on said clamping means, said member having a channel engaging the clamping means in a manner permitting sliding movement of said member along the clamping means in the line of the bores at all times, a clamping force generating means operating independently of said member to generate a force along the line of the bores for clamping a tube in a bore, a flaring device threadably mounted on said member for movement relative thereto axially of said bores, and a gauge on said member for indicating the proper degree of insertion of a tube into each bore of the clamping means, said gauge comprising a plate rigidly fixed to said member and positioned out of the line of movement of the flaring device, said plate extending from said member along the line of the bores, at right angles to the axes of the bores and spaced a predetermined distance from said one face of said clamping means, and said force generating means being operable firmly to clamp a tube in a bore after it has been positioned by the gauge with said member being slidable along said clamping means to bring the flaring device axially in line with a firmly clamped tube.

2. In a tube working tool, an elongated tube clamping means having a plurality of bores arranged in a line, each bore having a different diameter and each bore having a generally cylindrical portion and a conical counter-sunk portion extending from one face of said clamping means into the bore a depth directly proportional to the diameter of the bore, a slide member mounted on said clamping means, said member having a channel engaging the clamping means in a manner permitting sliding movement of said member along the clamping means in the line of the bores, a flaring device threadably mounted on said member for movement relative thereto axially of said bores, a gauge on said member for indicating the proper degree of insertion of a tube into each bore of the clamping means, said gauge comprising a plate rigidly fixed to said member and positioned out of the line of movement of the flaring device, said plate extending from said member along the line of the bores, at right angles to the axes of the bores and spaced a predetermined distance from said one face of

said clamping means, and a clamping force generating means operating independently of said member to generate a force firmly to clamp a tube in a bore, with said member being slidable along said clamping means to bring the flaring device axially in line with a firmly clamped tube.

GEORGE E. FRANCK.

REFERENCES CITED

The following references are of record in the file of this patent:

UNITED STATES PATENTS

Number	Name	Date
136,399	Wilmot	Mar. 4, 1873
838,705	Fuller	Dec. 18, 1906
1,784,544	Russell	Dec. 9, 1930
1,950,154	Rosenberg	Mar. 6, 1934
2,089,133	Parker	Aug. 3, 1937
2,090,660	Arndt	Aug. 24, 1937
2,120,029	Lilleberg	June 7, 1938
2,132,947	Gagne	Oct. 11, 1938
2,242,831	McIntosh	May 20, 1941
2,277,410	Neukirch	Mar. 24, 1942
2,415,520	Obecny	Feb. 11, 1947