United States Patent [19]

Hill

[11] **3,710,312**

[45] **Jan. 9, 1973**

[54] METHOD AND APPARATUS FOR CONTROLLING TRAFFIC FLOW IN ACCORDANCE WITH TRAFFIC PRESENCE

[75] Inventor: **Frank W. Hill,** Moline, Ill.

[73] Assignee: **Gulf & Western Industries, Inc.,** New York, N.Y.

[22] Filed: **March 15, 1971**

[21] Appl. No.: **124,599**

Related U.S. Application Data

[60] Division of Ser. No. 870,449, Oct. 23, 1969, Pat. No. 3,602,882, which is a continuation of Ser. No. 563,143, June 6, 1966, abandoned.

[52] **U.S. Cl.** ..... **340/31 R**

[51] **Int. Cl.** **G08g 1/01**

[58] **Field of Search** ..... 340/31 R, 38 L, 37

[56] **References Cited**

FOREIGN PATENTS OR APPLICATIONS

1,076,926 7/1967 Great Britain 340/37

OTHER PUBLICATIONS

Manual on Uniform Traffic Control Devices for Streets and Highways, pp. 320–1 U.S. Dept of Commerce, Bureau of Public Roads, Washington, D.C. June 1961

Primary Examiner—WIlliam O. Cooper

Attorney—James H. Tilberry, ALfred C. Body and Robert V. Vickers

[57] **ABSTRACT**

The presence of traffic in at least one of the intersecting passageways is monitored by developing a presence signal so long as a vehicle is present in a predetermined area and the presence signal is utilized to control the energization of a traffic signal light so as to initiate termination of a go signal display for traffic in the passageway which previously had right-of-way. Traffic presence detectors are provided also within the intersection itself to prevent yielding right-of-way to traffic in an intersecting passageway until the vehicle has left the intersection.

17 Claims, 7 Drawing Figures

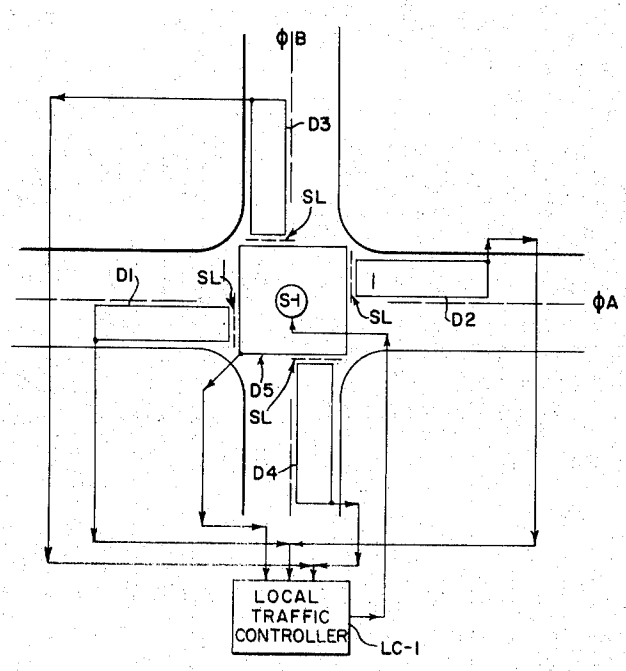

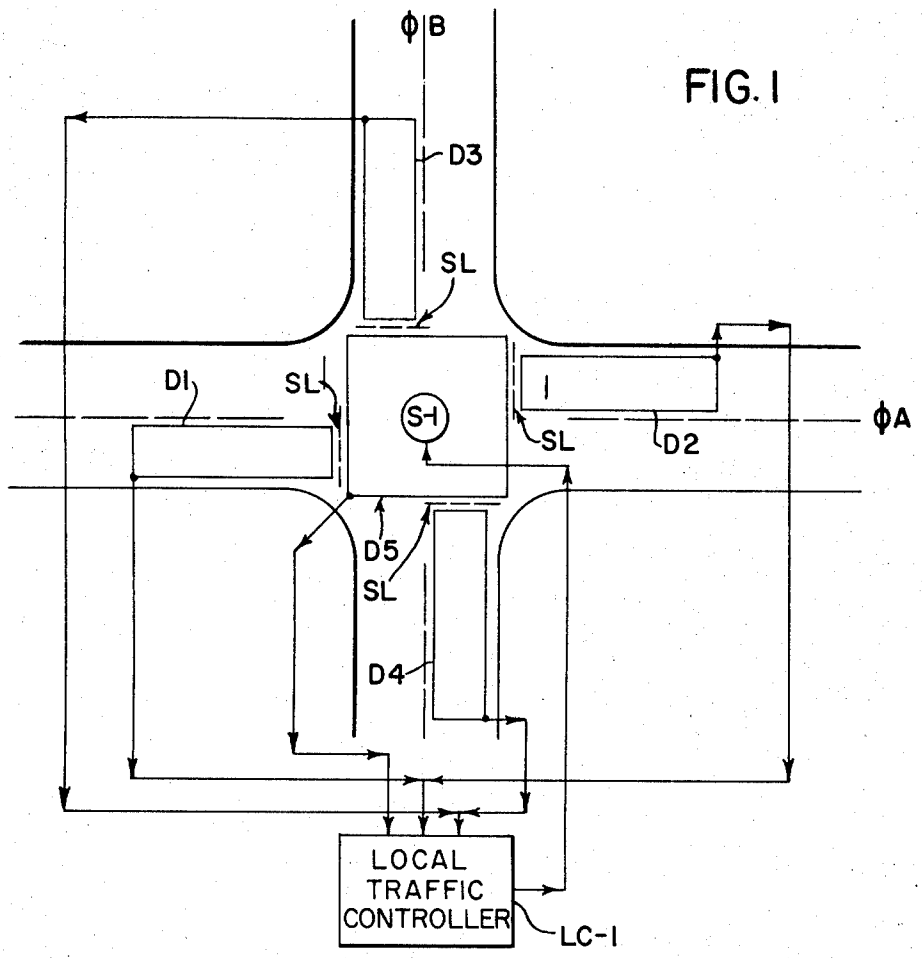
φB
D3
SL
D1
SL
S-1
SL
D2
φA
D5
SL
D4
LOCAL
TRAFFIC
CONTROLLER
LC-1

FIG. 1

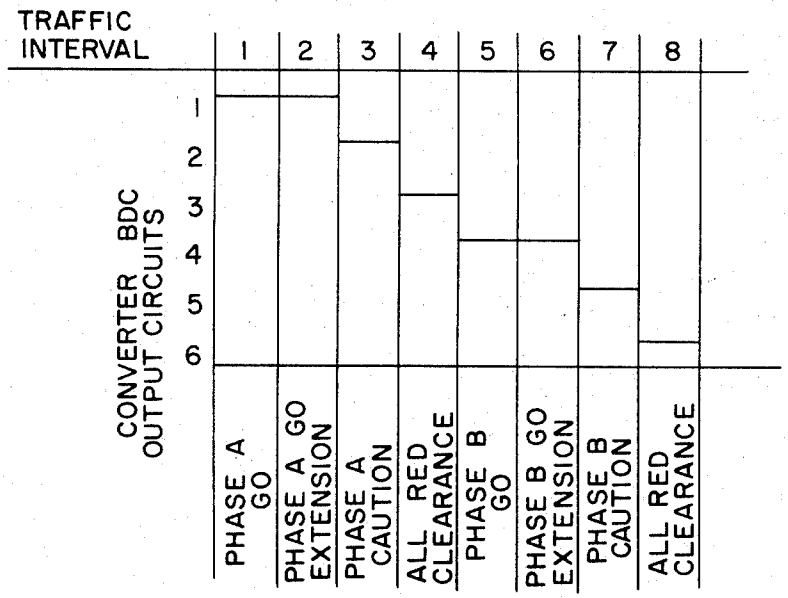
TRAFFIC INTERVAL
1
2
3
4
5
6
7
8
CONVERTER BDC OUTPUT CIRCUITS
1
2
3
4
5
6
PHASE A GO
PHASE A GO EXTENSION
PHASE A CAUTION
ALL RED CLEARANCE
PHASE B GO
PHASE B GO EXTENSION
PHASE B CAUTION
ALL RED CLEARANCE

FIG. 7

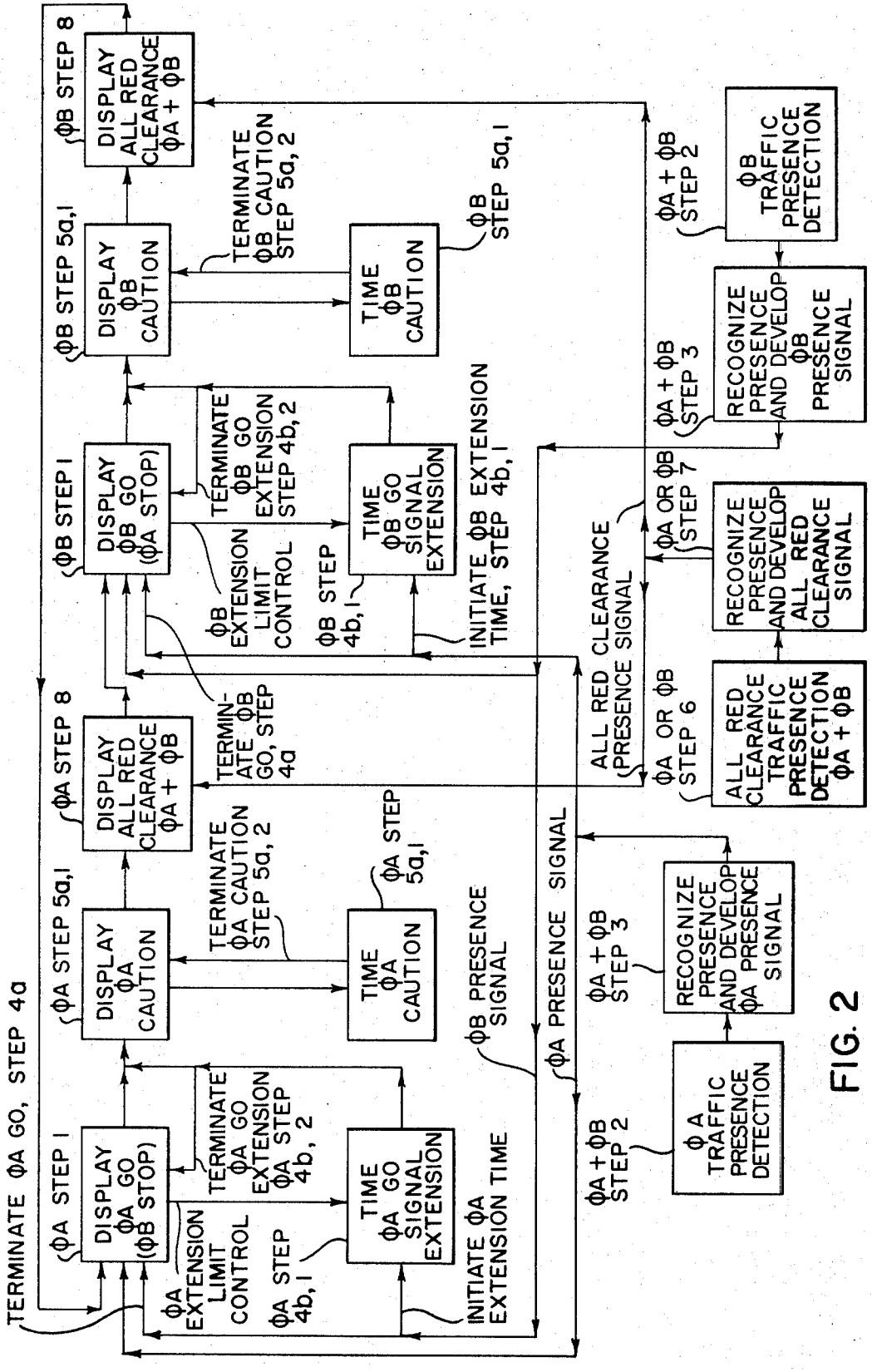
TERMINATE ΦA GO, STEP 4a
ΦA STEP 1
DISPLAY ΦA GO (ΦB STOP)
ΦA EXTENSION LIMIT CONTROL
ΦA STEP 4b, 1
TERMINATE ΦA GO EXTENSION ΦA STEP 4b, 2
TIME ΦA GO SIGNAL EXTENSION
INITIATE ΦA EXTENSION TIME
ΦA STEP 5a, 1
DISPLAY ΦA CAUTION
TERMINATE ΦA CAUTION STEP 5a, 2
TIME ΦA CAUTION
ΦA STEP 5a, 1
ΦA STEP 8
DISPLAY ALL RED CLEARANCE ΦA + ΦB
TERMIN-ATE ΦB GO, STEP 4a
ΦB PRESENCE SIGNAL
ΦA PRESENCE SIGNAL
ΦA + ΦB STEP 3
RECOGNIZE PRESENCE AND DEVELOP ΦA PRESENCE SIGNAL
ΦA + ΦB STEP 2
ΦA TRAFFIC PRESENCE DETECTION
ΦB STEP 1
DISPLAY ΦB GO (ΦA STOP)
ΦB EXTENSION LIMIT CONTROL
ΦB STEP 4b, 1
TERMINATE ΦB GO EXTENSION STEP 4b, 2
TIME ΦB GO SIGNAL EXTENSION
INITIATE ΦB EXTENSION TIME, STEP 4b, 1
ΦB STEP 5a, 1
DISPLAY ΦB CAUTION
TERMINATE ΦB CAUTION STEP 5a, 2
TIME ΦB CAUTION
ΦB STEP 5a, 1
ΦB STEP 8
DISPLAY ALL RED CLEARANCE ΦA + ΦB
ALL RED CLEARANCE (PRESENCE SIGNAL
ΦA OR ΦB STEP 6
ALL RED CLEARANCE TRAFFIC PRESENCE DETECTION ΦA + ΦB
ΦA OR ΦB (STEP 7
RECOGNIZE PRESENCE AND DEVELOP ALL RED CLEARANCE SIGNAL
ΦA + ΦB STEP 3
RECOGNIZE PRESENCE AND DEVELOP ΦB PRESENCE SIGNAL
ΦA + ΦB STEP 2
ΦB TRAFFIC PRESENCE DETECTION

FIG. 2

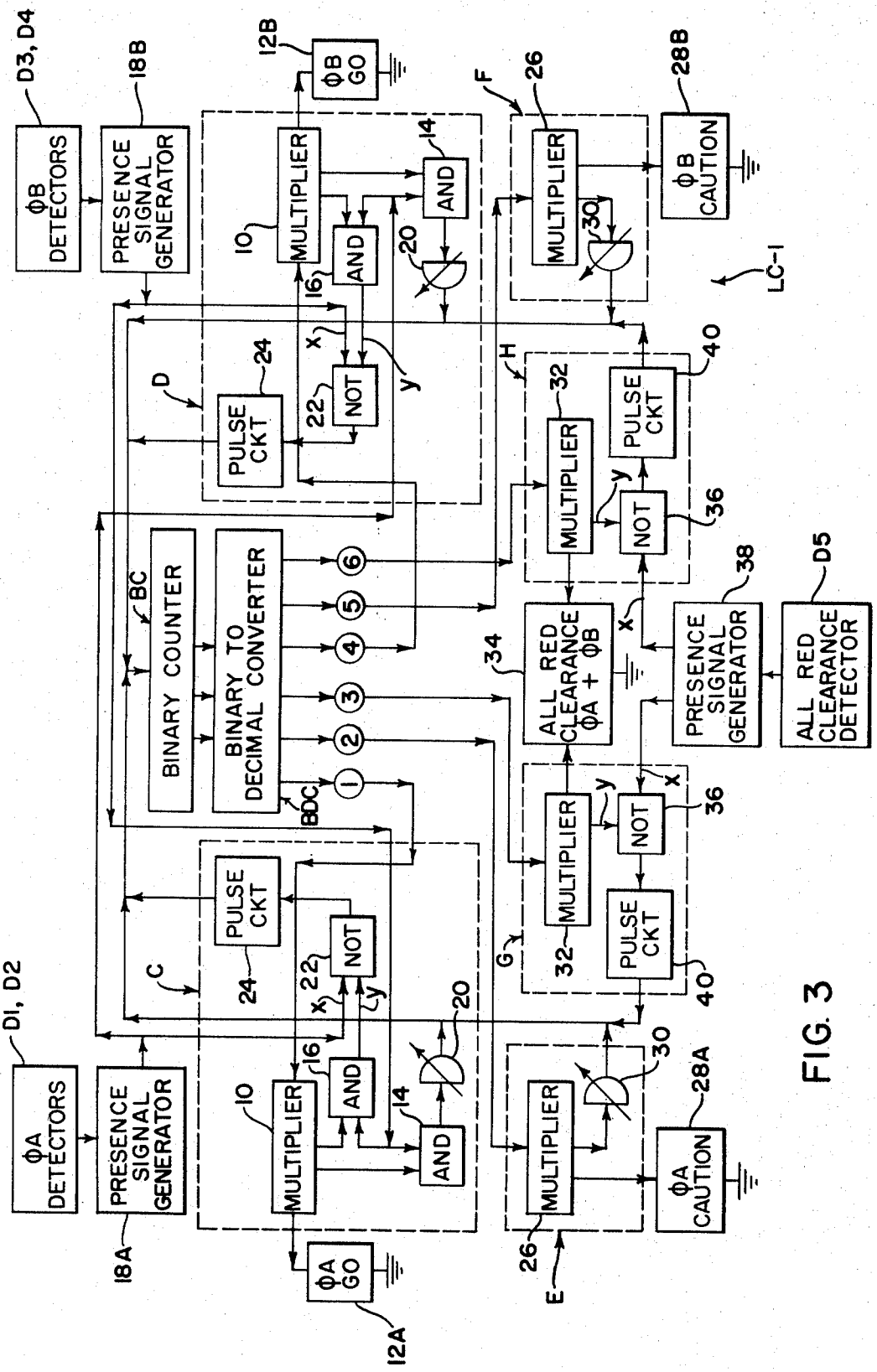
D3, D4
φB DETECTORS
18B
PRESENCE SIGNAL GENERATOR
12B
φB GO
10
MULTIPLIER
16
AND
14
AND
20
F
26
MULTIPLIER
30
28B
φB CAUTION
LC-1
D
PULSE CKT
24
22
NOT
x
y
H
32
MULTIPLIER
PULSE CKT
40
NOT
36
BC
BINARY COUNTER
BINARY TO DECIMAL CONVERTER
6
5
4
3
2
1
BDC
34
ALL RED CLEARANCE φA + φB
38
PRESENCE SIGNAL GENERATOR
D5
ALL RED CLEARANCE DETECTOR
C
G
D1, D2
φA DETECTORS
18A
PRESENCE SIGNAL GENERATOR
12A
φA GO
E
28A
φA CAUTION

FIG. 3

FIG. 4

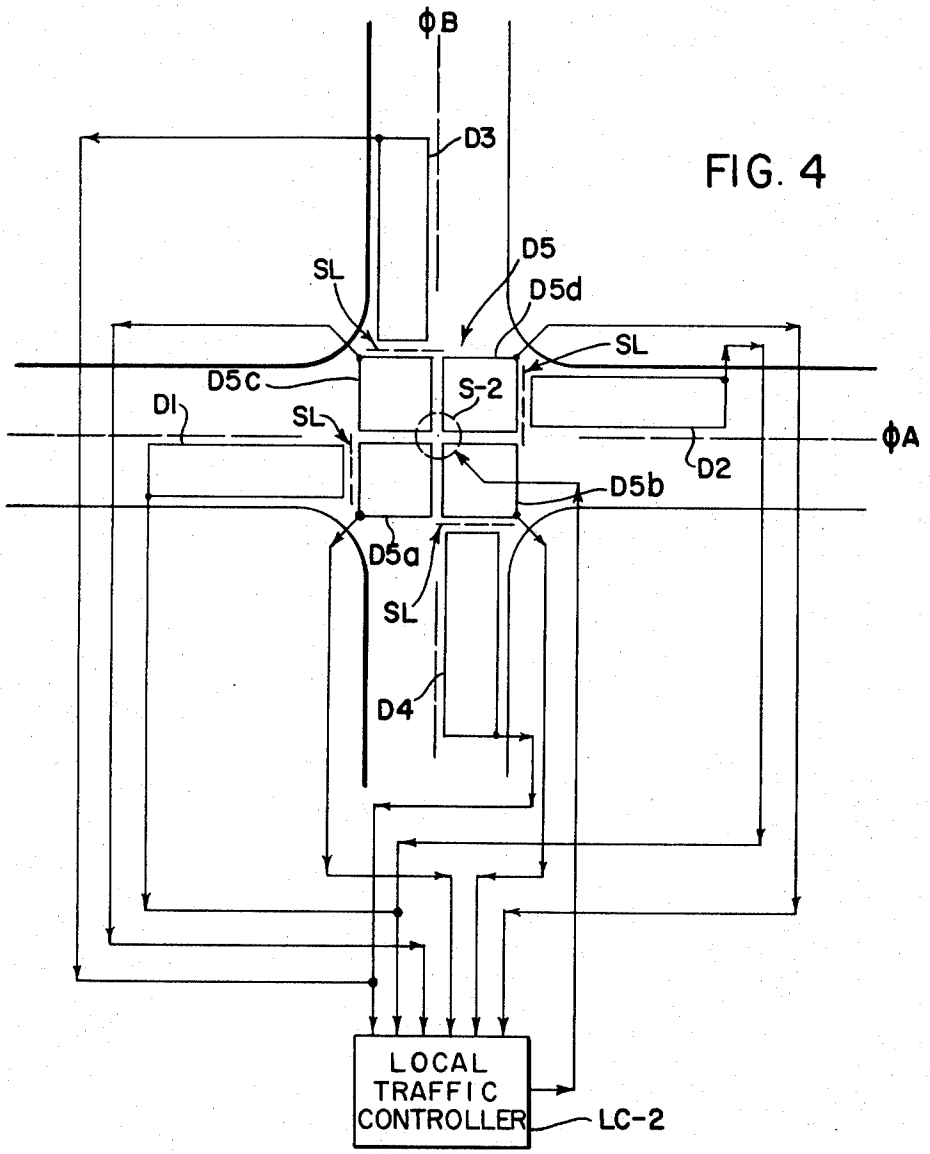
φB
D3
SL
D5
D5d
SL
D5c
S-2
D1
SL
φA
D2
D5b
D5a
SL
D4
LOCAL
TRAFFIC
CONTROLLER
LC-2

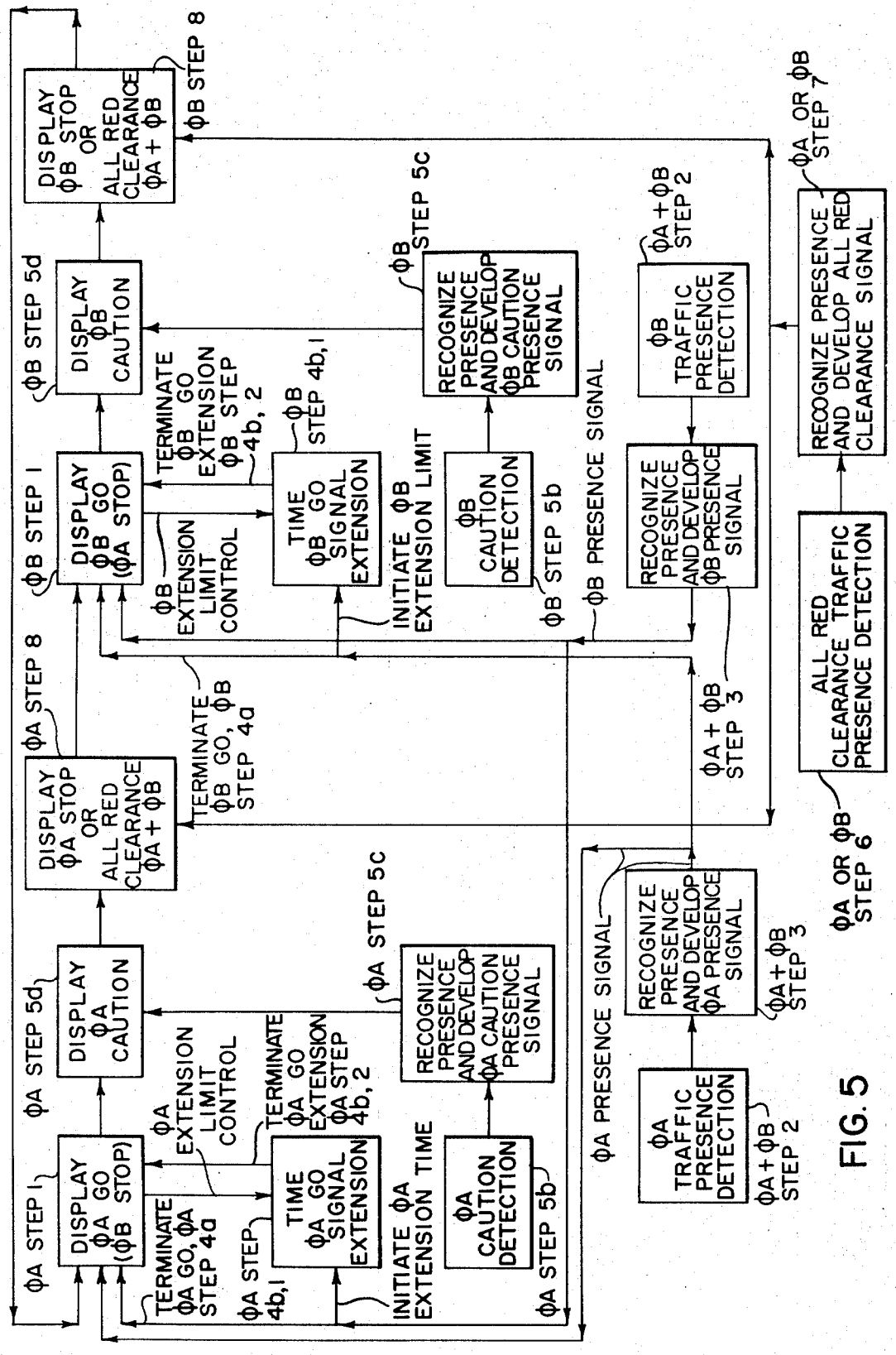
DISPLAY φA GO (φB STOP)
φA STEP 1
φA EXTENSION LIMIT CONTROL
TERMINATE φA GO, φA STEP 4a
φA STEP 4b, 1
TIME φA GO SIGNAL EXTENSION
TERMINATE φA GO EXTENSION φA STEP 4b, 2
INITIATE φA EXTENSION TIME
φA CAUTION DETECTION
φA STEP 5b
DISPLAY φA CAUTION
φA STEP 5d
RECOGNIZE PRESENCE AND DEVELOP φA CAUTION PRESENCE SIGNAL
φA STEP 5c
DISPLAY φA STOP OR ALL RED CLEARANCE φA + φB
φA STEP 8
TERMINATE φB GO, φB STEP 4a
DISPLAY φB GO (φA STOP)
φB STEP 1
φB EXTENSION LIMIT CONTROL
TIME φB GO SIGNAL EXTENSION
TERMINATE φB GO EXTENSION φB STEP 4b, 2
φB STEP 4b, 1
INITIATE φB EXTENSION LIMIT
φB CAUTION DETECTION
φB STEP 5b
RECOGNIZE PRESENCE AND DEVELOP φB CAUTION PRESENCE SIGNAL
φB STEP 5c
DISPLAY φB CAUTION
φB STEP 5d
DISPLAY φB STOP OR ALL RED CLEARANCE φA + φB
φB STEP 8
φA PRESENCE SIGNAL
φA TRAFFIC PRESENCE DETECTION
φA + φB STEP 2
RECOGNIZE PRESENCE AND DEVELOP φA PRESENCE SIGNAL
φA + φB STEP 3
φB PRESENCE SIGNAL
φB TRAFFIC PRESENCE DETECTION
φA + φB STEP 2
RECOGNIZE PRESENCE AND DEVELOP φB PRESENCE SIGNAL
φA + φB STEP 3
ALL RED CLEARANCE TRAFFIC PRESENCE DETECTION
φA OR φB STEP 6
RECOGNIZE PRESENCE AND DEVELOP ALL RED CLEARANCE SIGNAL
φA OR φB STEP 7

FIG. 5

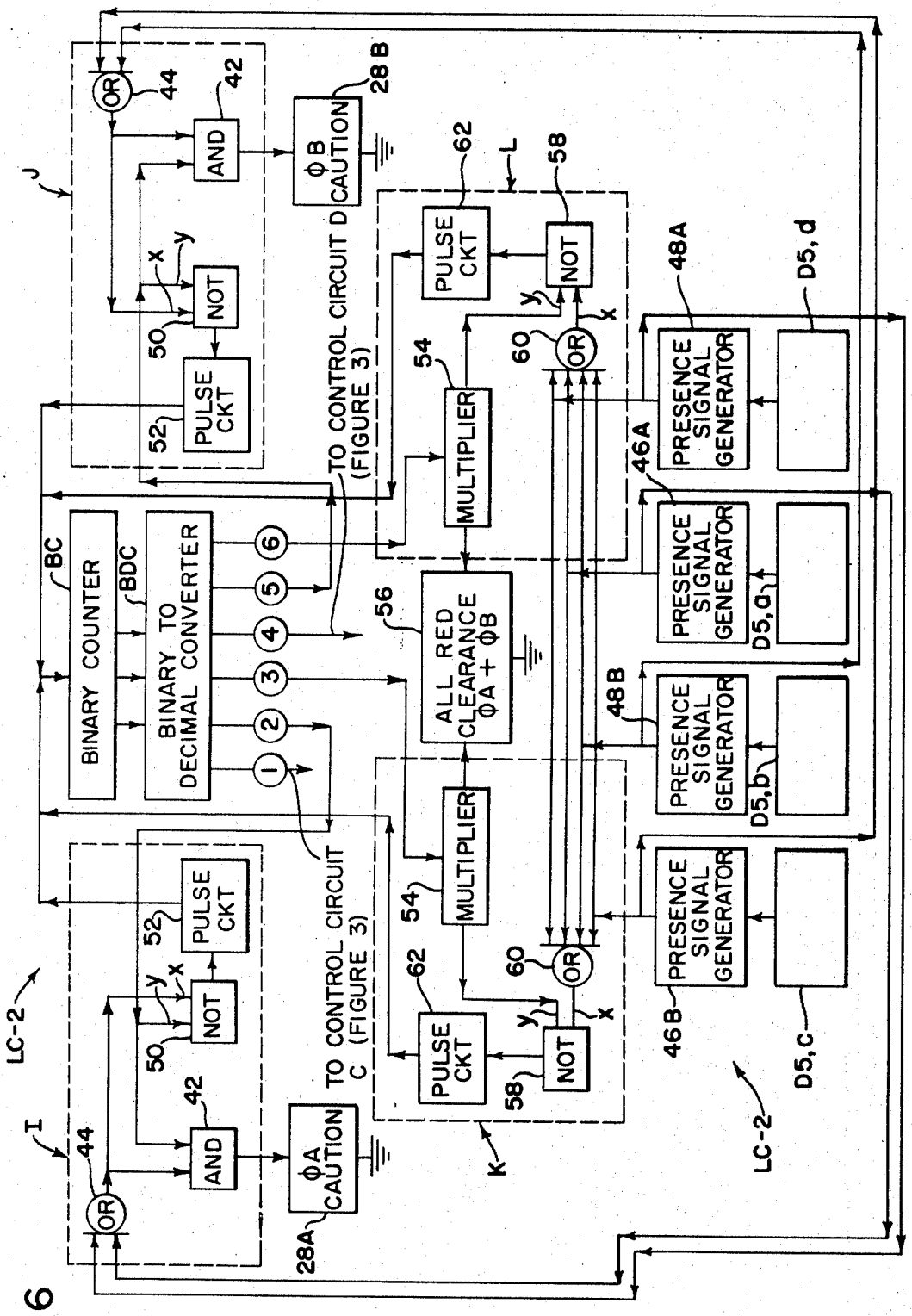
BINARY COUNTER
BC
BINARY TO DECIMAL CONVERTER
BDC
ALL RED CLEARANCE ΦA + ΦB
56
MULTIPLIER
54
PULSE CKT
52
NOT
50
AND
42
OR
44
ΦA CAUTION
28A
ΦB CAUTION
28 B
PRESENCE SIGNAL GENERATOR
46A
46B
48A
48 B
D5, a
D5, b
D5, c
D5, d
TO CONTROL CIRCUIT C (FIGURE 3)
TO CONTROL CIRCUIT D (FIGURE 3)
LC-2
I
J
K
L

FIG. 6

METHOD AND APPARATUS FOR CONTROLLING TRAFFIC FLOW IN ACCORDANCE WITH TRAFFIC PRESENCE

This application is a division of co-pending application, Ser. No. 870,449, filed Oct. 23, 1969, now U.S. Pat. No. 3,602,882, which is, in turn, a continuation of application Ser. No. 563,143 filed June 6, 1966 now abandoned.

This invention relates to the art of traffic control and, more particularly, to method and apparatus for controlling traffic flow through an intersection of at least two traffic phases in accordance with the presence of traffic in the phases.

Traffic control methods known heretofore for controlling traffic flow through an intersection of at least two traffic phases based on traffic demand, as opposed to a pretimed basis, require for practice the use of an actuated controller designed around spot detectors, such as the familiar treadle pad located on a roadbed. In such a control method, a vehicle approaching an intersection, through which it is denied right-of-way by a stop signal displayed by a traffic signal light, must pass over and momentarily actuate a spot detector in order to register its demand for right-of-way movement with an actuated intersection controller controlling the signal displays of the traffic signal light. The actuated controller, such as a semi-actuated or full-actuated controller, must include memory circuitry for remembering the momentary actuation of the spot detector until the controller actually allocates a right-of-way signal to the vehicle demanding right-of-way movement. However, at the instant in time at the controller actually commences allocation of a right-of-way signal to the vehicle, the vehicle may have "disappeared" and no longer requires right-of-way movement through the intersection. That is, for example, a single vehicle might pass over and actuate a cross street spot detector and then park before reaching the stop line at the intersection of the cross street and a main street, or enter a gasoline station before reaching the stop line, or the vehicle may have entered the intersection and turned right on the main street, as is permitted in some states (such as California, where many intersections have posted signs reading RIGHT TURN PERMITTED ON RED AFTER STOP). Accordingly, an allocation of a cross street right-of-way signal to the "disappeared" vehicle constitutes an unnecessary waste of right-of-way time, which must be taken away from the main street traffic flow.

A further problem with such previous traffic control methods is that of the "appearing vehicle". That is, for example, a vehicle may enter a cross street from a gasoline station, or parking lot, between a cross street spot detector and the stop line at the intersection of the cross street and a main street. Since the cross street spot detector has not been actuated, the vehicle is denied right-of-way movement until the vehicle is backed up to actuate the spot detector to register its demand for right-of-way movement through the intersection with the intersection controller.

A still further problem with such a traffic control method is that of "slow vehicle start". That is, for example, when a roadway pavement ices over during severe winter conditions, vehicles normally require a longer period of time to start moving and clear an intersection. This period of time may be referred to as the

vehicle initial or minimum period of time, and is normally a fixed period of time controlled by the local intersection controller for permitting a given number of vehicles to commence movement through an intersection, and is not sufficient to permit that given number of vehicles to clear the intersection during adverse winter conditions when the pavement ices over. This problem is partially solved on a temporary basis during such adverse winter conditions by maintenance men going to the intersection controller and resetting the vehicle initial time so that it times a longer period of time. The vehicle initial period is only one of many time periods that are timed by an intersection controller during each traffic signal cycle and, accordingly, by increasing this time period there results an inefficiency in the operation of the controller for the remaining periods of time to be timed during each traffic signal cycle.

In addition to the foregoing problems, traffic actuated controllers known heretofore for practicing such previous traffic control methods are, of necessity, quite complex. More particularly, whereas the vehicle initial time period discussed above is frequently a fixed, manually adjusted interval of time set on an intersection controller, many controllers allocate a variable initial period of time. A variable initial period of time, for example, is dependent on the number of vehicles which have actuated a spot detector. Accordingly, an intersection controller for allocating a variable initial period of time must include circuitry for counting the number of vehicles which actuated a spot detector and converting the count to a time period which is variable in accordance with the number of registered vehicle actuations. Many controllers also include circuitry for allocating vehicle extension periods in accordance with vehicle actuations of a spot detector. Still further, many controllers are further complicated by the inclusion of circuitry for placing a recall signal when a maximum vehicle interval has been timed out before all of the spot detected vehicles had a theoretical opportunity to enter the intersection so that they may be allocated a right-of-way interval during the next traffic signal cycle.

Further, many municipalities require that an all red clearance interval be allocated to all traffic phases, or movements, at an intersection controlled by a traffic controller each time one of the phases is giving up right-of-way movement and another phase is about to be given right-of-way movement. One reason for an all red clearance interval is to insure that an intersection is clear before a traffic phase is given right-of-way movement, thereby avoiding accidents due to vehicles "-jumping the light." Traffic controllers known heretofore for practicing methods of traffic control for allocating an all red clearance interval, allocate a fixed time interval for the all red clearance based on traffic studies, as opposed to the actual conditions prevailing at the controlled intersection. Thus, in the event that no vehicles are present in the controlled intersection, the time allotted for the all red clearance interval is wasted time during the traffic signal cycle.

Most municipalities require that a yellow clearance signal be displayed to a traffic movement between the go signal and the stop signal displayed to that movement. The yellow clearance signal is displayed while

the other movements controlled by the intersection controller are denied right-of-way movement by a stop signal. Thus, the yellow clearance signal serves as a safety interval to allow vehicles arriving late in the intersection to clear the intersection before the next movement receives a go signal. The yellow signal is allocated by the intersection controller on a fixed timed basis, as opposed to the actual traffic conditions prevailing at the controlled intersection. Thus, if no vehicles are present at the intersection, the time allocated to the yellow clearance signal is wasted time during the traffic signal cycle.

The present invention is directed toward a new method and apparatus for its practice of controlling traffic flow through an intersection of at least two traffic phases based on whether a vehicle is actually present within a particular area in at least one of the movements approaching an intersection and/or within the intersection itself, whereby the noted disadvantages, and others, of previous traffic control methods and apparatuses for their practice are overcome.

In accordance with the invention, the new traffic control method and apparatus for its practice provide for monitoring a predetermined area in the path of at least one traffic phase for the presence of traffic; developing a presence signal so long as a vehicle is present in the predetermined area; and, utilizing the presence signal to control the energization of a traffic signal light so as to initiate termination of a go signal display to the phase having right-of-way.

In accordance with another aspect of the present invention, the presence signal is utilized to energize a timing means for timing a predetermined period of time and then developing a termination a termination signal, which is utilized for energizing the traffic signal means in such a manner to terminate a go display to the movement having right-of-way and commence display of a caution signal to that movement.

In accordance with a still further aspect of the present invention, a predetermined area located at the intersection of the movements is monitored for the presence of traffic, and a caution signal is developed so long as a vehicle is present in the intersection area with the caution signal being utilized to control the time duration that the traffic signal means displays a caution signal to the movement previously having right-of-way.

In accordance with a still further aspect of the present invention, an all red clearance signal is developed so long as a vehicle is present in the intersection area, with the all red clearance signal being utilized to control the time duration that the traffic signal means displays a stop signal to all of the traffic movements.

The primary object of the present invention is to provide method, and apparatus for its practice, for efficiently controlling traffic flow based on whether vehicles are actually present in the approaches to an intersection.

Another object of the present invention is to provide a method of traffic control wherein the problem of the disappearing vehicle is solved.

A still further object of the present invention is to provide a method of traffic control wherein the problem of an appearing vehicle is solved.

In accordance with a still further object of the present invention, a method of traffic control is provided wherein the problem of "slow vehicle start" is solved.

A still further object of the present invention is to provide a method wherein the apparatus for its practice need not include memory circuitry.

A still further object of the present invention is to provide a method of traffic control wherein apparatus for its practice need not include variable initial interval circuitry.

A still further object of the present invention is to provide a method of traffic control wherein the apparatus for its practice need not include circuitry for allocating vehicle extensions in accordance with traffic actuations registered with a spot detector.

In accordance with a still further object of the present invention, a method of traffic control is provided wherein the apparatus for its practice need not include circuitry for placing a recall signal when a maximum interval has timed out before all of the registered vehicles have had an opportunity to clear the intersection.

In accordance with a still further object of the present invention, there is provided a method and apparatus for its practice for controlling the time duration of a caution signal displayed by an intersection traffic signal light in accordance with whether vehicles are actually present in the intersection.

In accordance with a still further object of the present invention, method and apparatus for its practice are provided for controlling the time duration of an all red clearance signal displayed by an intersection traffic signal light in accordance with whether vehicles are actually present in the intersection.

The method of traffic control, in accordance with the invention, may incorporate various procedural steps of which the preferred procedures will be described in detail in the specification and illustrated in the accompanying drawings, which are a part hereof. Further, the invention may be practiced with various substantially different apparatuses of which two will be described in detail in the specification and illustrated in the accompanying drawings, which are a part hereof and wherein:

FIG. 1 is a plan view illustrating a typical intersection of two traffic phases to which the present invention may be applied;

FIG. 2 is a graphical illustration of the preferred procedure for practicing a method in accordance with the present invention for controlling traffic flow through the intersection illustrated in FIG. 1;

FIG. 3 is a schematic block diagram illustration of an apparatus for practicing the method illustrated in FIG. 2;

FIG. 4 is a plan view illustrating a typical intersection of two traffic phases to which a second aspect of the method in accordance with the invention may be applied;

FIG. 5 is a graphical illustration of the procedure for practicing the second aspect of the method in accordance with the invention for controlling traffic flow through the intersection illustrated in FIG. 4;

FIG. 6 is a schematic block diagram illustration of an apparatus for practicing the method illustrated in FIG. 5; and,

FIG. 7 is a graphical illustration of traffic intervals versus operating circuits with respect to the circuits illustrated in FIGS. 3 and 6.

Referring now to the drawings wherein the showings are for the purposes of explaining the preferred method of traffic control and apparatus for its practice, and not for purposes of limiting same, there is illustrated in FIG. 1 a typical intersection of two traffic phases, or movements, phase A and phase B. Adjacent the intersection of the two phases there is schematically illustrated stop lines SL which may be located as desired by a municipal traffic engineer. At each approach to the intersection there is provided a presence detector, i.e., detectors D1 and D2 for the approaches of phase A and detectors D3 and D4 for the approaches of phase B. Detectors D1, D2, D3 and D4 are illustrated as loop detectors, which are well known in the art of traffic control, and generally comprise a closed wire loop embedded in a roadway, with the loop configuration defining an area under surveillance by the detector, which together with associated circuitry develops an output signal so long as a vehicle is present within the area under surveillance. Alternatively, detectors D1, D2, D3 and D4 may take the form of other presence detectors such as overhead mounted ultrasonic detectors which, in a manner similar to that of loop detectors, serve to monitor, or survey, a predetermined area on a roadbed for the presence of vehicles, and provide an output signal so long as a vehicle is present in the area under surveillance. As shown in FIG. 1, each loop detector extends from a point substantially adjacent the stop line SL for the associated approach, and away from the intersection for a distance sufficient to detect the presence of a number of vehicles pursuant to a traffic engineer's schedule. The width of the loop detector should be sufficient to detect the presence of vehicles on as many lanes that are approaching the intersection along that particular phase. The loop detectors for each phase are connected together to a local traffic controller LC–1, which controls the operation of an intersection traffic signal S–1 which displays go, caution and stop signals to phases A and B. In addition to loop detectors D1, D2, D3 and D4 an all red clearance loop detector D5 is illustrated in FIG. 1. Loop detector D5 has a configuration so that it serves to detect the presence of vehicles within the intersection area bordered by stop lines SL at the approaches to the intersection.

Referring now to FIG. 2, there is shown a graphical illustration of a preferred procedure of practicing a method, in accordance with the invention, for controlling traffic flow through the intersection illustrated in FIG. 1. The following description given with respect to FIG. 2 sets forth two procedural variations, Procedure I and Procedure II. Thereafter, a description of apparatus for practicing the method is given with respect to the circuit illustrated in FIG. 3.

Briefly, the method in accordance with the invention for controlling traffic flow through the intersection of phases A and B, illustrated in FIG. 1, comprises the steps of: providing a traffic signal light S–1 for displaying go, caution and stop signals to traffic phases A and B; energizing traffic signal S–1 to display a go signal to phase A and a stop signal to phase B; providing traffic monitoring means in the form of loop detectors D1 and D2 for phase A and D3 and D4 for phase B for respectively developing a phase A presence signal and a phase B presence signal so long as a vehicle is present in the areas of influence of these detectors; and, utilizing the phase B presence signal for controlling energization of traffic signal S–1 to initiate termination of the go signal display to phase A. More particularly, the procedural steps, in accordance with the invention, for controlling the traffic flow through the intersection illustrated in FIG. 1 are set forth below with respect to Procedure I and a modified version thereof, Procedure II.

PROCEDURE I

This procedure is given with respect to the graphical illustration shown in FIG. 2, wherein the steps include:

STEP 1. Energize the traffic signal S–1 to display a go signal to phase A and a stop signal to phase B.

STEP 2. Monitor phases A and B by means of loop detectors D1, D2, D3 and D4 for vehicles present within the respective areas of influence of the detectors.

STEP 3. Recognize the presence of a vehicle in the detector zones of influence for phase A and phase B, and develop a phase A presence signal so long as a vehicle is present in the area of influence of detector D1 or D2, and develop a phase B presence signal so long as a vehicle is present in the area of influence of detector D3 or D4.

STEP 4. If in STEP 3 a phase B presence signal is developed and a phase A presence signal is not developed, then

STEP 4*a*. utilize the phase B signal for energizing traffic signal S-1 to terminate the phase A go signal display.

STEP 4 (alternative). If in STEP 3 both phase A and phase B presence signals are developed, then

STEP 4*b*,1. utilize the presence signals to energize a phase A go signal extension limit timer which serves to time a predetermined period of time and then develop a phase A go termination signal.

STEP 4*b*,2. Utilize the phase A go termination signal to energize traffic signal S–1 to terminate the phase A go signal display.

STEP 5*a*,1. Energize traffic signal S-1 to display a caution signal to phase A and energize a phase A caution timer which serves to time a predetermined caution interval and then develop a phase A caution termination signal.

STEP 5*a*,2. Utilize the phase A caution termination signal to energize traffic signal S-1 to terminate the phase A caution signal display.

The method steps for the control of phase B traffic flow are identical with that with respect to STEPS 1 through 5*a*,2 just described relative to phase A traffic flow. Accordingly, these steps should be repeated for phase B traffic flow as indicated by the like character references and legend shown in FIG. 2 with respect to both phase A and phase B.

PROCEDURE II

Procedure II is a modification of Procedure I, just described, to the extent that it includes consideration as to whether vehicles are present within the intersection area of phases A and B illustrated in FIG. 1. Briefly, during this procedure, loop detector D5 is util-

ized for detecting the presence of a vehicle within the intersection area for purposes of energizing the traffic signal S–1 to display stop signals to both phases A and B, i.e., an all red clearance signal, so long as a vehicle is present. Accordingly, Procedure II includes STEPS 1 through 5*a*,2 of Procedure I together with the following steps:

STEP 6. Monitor the intersection area of phases A and B for the presence of a vehicle with the zone of influence of loop detector D5.

STEP 7. Recognize the presence of a vehicle in the zone of influence of loop detector D5, and develop an all red clearance presence signal so long as a vehicle remains in the area of influence of detector D5.

STEP 8. Utilize the all red clearance presence signal to energize traffic signal S–1 to display a stop signal to both phases A and B, i.e., an all red clearance signal, so long as the all red clearance presence signal is developed.

APPARATUS FOR PRACTICING PROCEDURES I AND II

Referring now to FIG. 3, there is schematically illustrated in block diagram form an apparatus taking the form of a two phase, full actuated, presence detector traffic controller LC-1 for practicing Procedures I and II, described hereinabove. It is contemplated that the controller be constructed so that its control and switching functions are accomplished with the use of relays; or a combination of relays and a step switch mechanism; or a combination of relays and a standard cam switching device; or a combination of relays and solid state, logic circuitry; or solid state, logic element circuitry which may include matrix systems for accomplishing various switching functions. It is also contemplated that the controller be so constructed that its timing functions are accomplished by means of thermionic tubes; or thyratron tubes; or mechanical timers, or solid state timers.

The local controller LC-1, illustrated in FIG. 3, takes the form of a solid state, logic element controller including a binary counter BC having a single input circuit, and three output circuits connected to a binary to decimal converter BDC having output circuits Nos. 1, 2, 3, 4, 5 and 6; a phase A go signal control circuit C connected with output circuit No. 1; a phase B go signal control circuit D connected with output circuit No. 4; a phase A caution signal control circuit E connected with output circuit No. 2; a phase B caution signal control circuit F connected with output circuit No. 5; a phase A all red clearance control circuit G connected with output circuit No. 3; and, a phase B all red clearance control circuit H connected with output circuit No. 6.

As will become evident from the description that follows, each control circuit C and D includes two AND circuits, a NOT circuit; a MULTIPLIER circuit, a PULSE circuit and a TIMER circuit; each control circuit E and F includes a MULTIPLIER circuit and a TIMER circuit; and, each control circuit G and H includes a NOT circuit, a MULTIPLIER circuit and a PULSE circuit. To facilitate the understanding of this invention, each of these circuits is briefly explained below.

AND circuit. This is a static element circuit having two or more input circuits and one output circuit. A positive potential output signal, known as a (1) signal, is present at its output circuit so long as all of its input circuits receive a (1) signal. If a ground potential signal, known as a (0) signal, is present at any of its input circuits a (0) signal is present at its output circuit.

TIMER circuit. This is a static element timing circuit having an input circuit and an output circuit. An (1) output signal pulse is present at its output circuit a predetermined period of time after an (1) input signal is received at its input circuit.

MULTIPLIER circuit. This is a static element circuit having an input circuit and two or more output circuits. A (1) signal is present on each of the output circuits so long as a (1) signal is present at its input circuit.

PULSE circuit. This is a static element pulse circuit having an input circuit and an output circuit. An (1) output signal pulse appears on its output circuit in response to application of an (1) input signal to its input circuit.

NOT circuit. This is a static element circuit having two input circuits *x* and *y* and an output circuit. A (1) signal is present at its output circuit so long as a (1) signal is present at its input circuit y and a (1) signal is not present at its input circuit *x*. If a (1) signal is present at its input circuit *x*, or a (0) signal is present at its input circuit *y*, a (0) signal is present at its output circuit.

Binary counter BC has a single input circuit and three output circuits, and is capable of counting to seven in response to signal pulses received at its input circuit. Counter BC may, for example, take the form of the binary counter illustrated in FIG. 5.9 of General Electric's Transistor Manual, Seventh Edition. The binary to decimal converter BDC is connected to the three binary output circuits of counter BC, and serves to route selected combinations of the binary outputs to converter output circuit Nos. 1, 2, 3, 4, 5 and 6. Converter BDC, for example, may take the form of a diode matrix, similar to that as illustrated in FIG. 3 of U.S. Pat. No. 3,435,413, granted Mar. 25, 1969 on application, Ser. No. 462,028, filed June 7, 1965, assigned to the assignee of the present invention. The output signals present at converter BDC output circuit Nos. 1 through 6 take the form of either a (1) signal or a (0) signal.

GO CONTROL CIRCUITS

The internal circuitry of phase A go control circuit C and phase B go control circuit D are substantially identical, and, accordingly, only control circuit C will be described hereinafter in detail, like components in both circuits being identified in FIG. 3 with like reference characters. Go control circuit C includes a MULTIPLIER circuit 10 having a single input circuit connected to converter BDC output circuit No. 1. MULTIPLIER circuit 10 has three output circuits respectively connected to a phase A go signal light 12A, to an input circuit of an AND circuit 14, and to an input circuit of a second AND circuit 16. AND circuits 14 and 16 each have a second input circuit connected to the output circuit of a phase B presence signal generator 18B which, in turn, has its input circuit connected to phase B loop detectors D3, D4. The output

circuit of AND circuit **14** is connected to the input circuit of a TIMER circuit **20** which, in turn, has its output circuit connected to the input circuit of binary counter BC. TIMER circuit **20** may, for example, take the form of a time adjustable unijunction transistor, RC relaxation oscillator timing circuit which upon receipt of a (1) signal at its input circuit times a predetermined period of time and then develops a (1) signal pulse for application to the input circuit of binary counter BC. AND circuit **16** has its output circuit connected to a y input circuit of a NOT circuit **22**. The *x* input circuit of NOT circuit **22** is connected to the output circuit of a phase A presence signal generator **18a** which, in turn, has its input circuit connected to phase A loop detectors D1, D2. The output circuit of NOT circuit **22** is connected to the input circuit of a PULSE circuit **24**, which, in turn, has its output circuit connected to the input circuit of binary counter BC.

CAUTION CONTROL CIRCUITS

The internal circuitry of phase A caution control circuit E and phase B caution control circuit F are substantially identical and, accordingly, only caution control circuit E will be described hereinafter in detail, like components in both circuits E and F being identified in FIG. **3** with like reference characters. Circuit E includes a MULTIPLIER circuit **26** having an input circuit connected with converter BDC output circuit No. **2**. MULTIPLIER circuit **26** also includes two output circuits respectively connected with a phase A caution signal light **28A**, and to the input circuit of a TIMER circuit **30**. TIMER circuit **30** is preferably constructed in a manner similar to that as described hereinabove with respect to TIMER circuit **20**, and includes an output circuit connected to the input circuit of binary counter BC.

ALL RED CLEARANCE CONTROL CIRCUITS

The internal circuitry of phase A all red clearance control circuit G and phase B all red clearance control circuit H are substantially identical and, accordingly, only control circuit G will be described hereinafter in detail, like components in both circuits being identified in FIG. **3** with like reference characters. Circuit G includes a MULTIPLIER circuit **32** having its input circuit connected to converter BDC output circuit No. **3**, and a first output circuit connected to an all red clearance signal light **34** for, when energized, displaying a stop signal to both phase A and phase B. MULTIPLIER circuit **32** has a second output circuit connected to input circuit y of a NOT circuit **36**. The *x* input circuit of NOT circuit **36** is connected to an output circuit of an all red clearance detector presence signal generator **38** which, in turn, has its input circuit connected to the all red clearance loop detector D5. The output circuit of NOT circuit **36** is connected to the input circuit of a PULSE circuit **40** which, in turn, has its output circuit connected to the input circuit of binary counter BC.

OPERATION

During each cycle of operation of the presence detector local controller LC-1, each binary to decimal converter BDC output circuit, Nos. **1**, **2**, **3**, **4**, **5** and **6**, is completed once, during which a (1) signal is present thereon, in response to a (1) signal pulse applied to the input circuit of binary counter BC. During the time period that one of the converter BDC output circuits is completed, the controller allocates at least one traffic interval. Thus, as shown in the chart illustrated in FIG. **7**, traffic interval Nos. **1** and **2** are successively allocated during the time period that circuit No. **1** is completed; traffic interval No. **3** is allocated during the time period that circuit No. **2** is completed; traffic interval No. **4** is allocated during the time period that circuit No. **3** is completed; traffic interval Nos. **5** and **6** are successively allocated during the time period that circuit No. **4** is completed; traffic interval No. **7** is allocated during the period that circuit No. **5** is completed; and, traffic interval No. **8** is allocated during the time period that circuit No. **6** is completed. Interval Nos. **1** and **5** are respectively the phase A go dwell interval and the phase B go dwell interval. Interval Nos. **2** and **6** are respectively the phase A go extension interval and the phase B go extension interval. Interval Nos. **3** and **7** are respectively the phase A caution interval and the phase B caution interval. Interval Nos. **4** and **8** are all red clearance intervals. It is to be understood that during phase A go interval No. **1** the local controller LC–**1** allocates a stop interval to phase B and, similarly, during the phase B go interval No. **5** the local controller LC–**1** allocates a stop interval to phase A, as is common in the art of traffic control.

A cycle of operation commences upon application of a (1) signal pulse to the input circuit of binary counter BC, advancing the local controller LC–**1** to interval No. **1**, during which a (1) signal is present on converter BDC output circuit No. **1**. This energizes the phase A go signal light **12A** of signal S–**1** (FIG. **1**), through MULTIPLIER circuit **10** and applies a (1) signal to one of the input circuits of each of the AND circuits **14** and **16**. Local controller LC–**1** dwells in interval No. **1** allocating a go signal to phase A until a vehicle enters the area of surveillance of either of phase B loop detectors D3 or D4.

If a vehicle is not present in the area of influence of phase A loop detectors D1, D2, a (1) signal is not present at the *x* input circuit of NOT circuit **22**. During this condition of NOT circuit **22**, when a vehicle is present in the area of influence of either phase B loop detectors D3 or D4, a (1) signal is applied from the output circuit of phase B presence signal generator **18B** to the second input circuit of AND circuit **16**. Thus, a (1) signal is now present on the output circuit of AND circuit **16**, which is applied to the y input circuit of NOT circuit **22**, and since there is not a (1) signal applied to the *x* input circuit, a (1) signal is now present on the output circuit of NOT circuit **22**. This (1) signal is applied to the input circuit of PULSE circuit **24** which converts the signal to a (1) signal pulse for application to the input circuit of binary counter BC. This advances controller LC–**1** to de-energize converter output circuit No. **1** and, hence, de-energize phase A go light **12A** and energize converter circuit No. **2**. It will be noted with respect to the description above, that traffic interval No. **2**, i.e., the phase A go extension interval, was skilled and the controller advanced directly from interval No. **1** to interval No. **3**.

If a vehicle is present in the area of influence of either of the phase A loop detectors D1 or D2, and either of the phase B loop detectors D3 or D4, a (1) signal is applied to both the *x* input circuit and *y* input circuit of NOT circuit 22. Accordingly, a (1) signal will not be present on the output circuit of NOT circuit 22. However, a (1) signal is now applied to both input circuits of AND circuit 14. Thus, a (1) signal is applied to the input circuit of TIMER circuit 20. This causes TIMER circuit 20 to time a predetermined period of time, which may be termed as the phase A go signal extension interval No. 2 (FIG. 7), and then develop a (1) signal pulse which appears at its output circuit. This (1b) signal pulse may be termed as a phase A go extension termination signal, and is applied to the input circuit of binary counter BC. This advances the local controller LC–1 to energize converter output circuit No. 2 and de-energize converter output circuit No. 1 and, hence, de-energize phase A go light 12A.

With converter output circuit No. 2 energized, a (1) signal is applied to MULTIPLIER circuit 26 in control circuit E to energize a phase A caution signal light 28A of traffic signal S–1 (FIG. 1). A (1) signal is applied from the output circuit of MULTIPLIER circuit 26 to the input circuit of TIMER circuit 30. This causes the TIMER circuit 30 to time a predetermined period of time which may be termed as the phase A caution interval No. 3 (FIG. 7), and then develop an (1) output signal pulse at its output circuit. This signal pulse may be termed as the phase A caution interval termination signal, and is applied to the input circuit of binary counter BC. This advances controller LC–1 to de-energize converter output circuit No. 2 and, hence, de-energize phase A caution signal light 28A, and energize converter output circuit No. 3.

With converter BDC output circuit No. 3 energized, a (1) signal is applied through MULTIPLIER circuit 32 to energize the all red clearance light 34 of traffic signal S–1 (FIG. 1), for displaying a stop signal to both phase A and phase B. A (1) signal is also applied through MULTIPLIER circuit 32 to the y input circuit of NOT circuit 36. So long as a vehicle is present in the area of influence of all red clearance detector D5 (FIG. 1) a (1) signal is applied to the *x* input circuit of NOT circuit 36 and, accordingly, a (1) signal is not present on the output circuit of NOT circuit 36. The all red clearance light 34 will remain energized until no vehicle is present in the area of influence of all red clearance detector D5. At that time, a (1) signal will not be present at the *x* input circuit of NOT circuit 36 and since a (1) signal is present on its *y* input circuit, a (1) signal appears on the output circuit of NOT circuit 36. This signal is converted to a (1) signal pulse by PULSE circuit 40 and applied to the input circuit of binary counter BC to advance controller LC–1 so that converter output circuit No. 3 is de-energized and, hence, all red clearance light 34 is de-energized, and converter output circuit No. 4 is energized.

The operation of the controller during phase B traffic interval Nos. 5, 6, 7 and 8 with respect to converter BDC output circuit Nos. 4, 5 and 6 is identical to that just described for the operation during phase A traffic interval Nos. 1, 2, 3 and 4 with respect to converter BDC output circuit Nos. 1, 2 and 3. Thus, no further description of the operation of local controller LC–1 is deemed necessary for a complete understanding of the operation of the controller.

A SECOND ASPECT OF THE INVENTION

Referring now to FIGS. 4, 5 and 6, there is illustrated method and apparatus for its practice in accordance with a second aspect of the invention. This aspect of the invention is quite similar to that as set forth with respect to FIGS. 1 through 3 and, accordingly, like character references and like legend are used in FIGS. 4, 5 and 6 for identifying like procedural steps and components. In FIG. 4 there is illustrated a typical intersection of two traffic phases, phase A and phase B. Adjacent the intersection of the two phases there is schematically illustrated stop lines SL which may be located as desired by a municipal traffic engineer. At each approach to the intersection there is provided a presence detector, i.e., detectors D1, D2 for the approaches of phase A, and detectors D3, D4 for the approaches of phase B. Detectors D1, D2, D3 and D4 are illustrated as loop detectors and may, if desired, take the form of ultrasonic detectors as previously discussed with reference to FIG. 1. The loop detectors for each phase are connected together to a traffic controller LC–2 which controls the operation of an intersection traffic signal S–2, similar to signal S–1 illustrated in FIG. 1, which displays go, caution and stop signals to phases A and B. In addition to loop detectors D1, D2, D3 and D4 there is provided an all red clearance loop detector D5 having a configuration similar to that as illustrated in FIG. 1, i.e., it serves to detect the presence of vehicles within the intersection area bordered by stop lines SL. However, in this aspect of the invention, loop detector D5 is also divided into four portions to define four loop detectors D5*a*, D5*b*, D5*c* and D5*d*, as illustrated in FIG. 4. As will be described in greater detail hereinafter with reference to FIG. 6, loop detectors D5*a*, D5*b*, D5*c* and D5*d* serve as phase A and phase B caution (yellow) signal presence detectors. In practice, it may be desirable to use separate loop detectors for detector D5 and its portions D5*a*, D5*b*, D5*c* and D5d, as is contemplated by the invention. For purposes of simplifying the explanation of the invention, the loop detectors will be described with reference to the configurations illustrated in FIG. 4.

Referring now to FIG. 5, there is shown a graphical illustration of a method, in accordance with the invention, for controlling traffic flow through the intersection illustrated in FIG. 4. The method illustrated in FIG. 5 is similar to that as illustrated in FIG. 2 and, accordingly, only the deviations therefrom will be described herein in detail. The following description given with respect to FIG. 5 sets forth Procedure III for practicing the method in accordance with the invention. Thereafter, a description of apparatus for practicing the method is given with respect to the circuit illustrated in FIG. 6.

PROCEDURE III

Briefly, the method, in accordance with the invention, for controlling traffic flow through the intersection of phases A and B illustrated in FIG. 4 comprises the steps of: providing a traffic signal light S–2 for displaying go, caution and stop signals to traffic phases A and B; energizing traffic signal S–2 to display a go

signal to phase A and a stop signal to phase B; providing traffic monitoring means in the form of loop detectors D1, D2 for phase A and D3, D4 for phase B for respectively developing a phase A presence signal and a phase B presence signal so long as a vehicle is present in the respective areas of influence of the detectors; utilizing the phase B presence signal for controlling energization of traffic signal S–2 to initiate termination of a go signal displayed to phase A; providing caution signal traffic monitoring means in the form of loop detectors D5*a* and D5*d* for phase A and loop detectors D5*c* and D5*b* for phase B for respectively developing a phase A caution presence signal and a phase B caution presence signal so long as a vehicle is present in the respective areas of influence of these detectors; and, utilizing the phase A and phase B caution signals for respectively controlling the time duration that traffic signal light S–2 displays a caution signal to phase A and phase B. More particularly, Procedure III includes Steps 1 through 4*b*,2 and Steps 6 through 8 of Procedures I and II, omitting Step 5*a*,1 and Step 5*a*,2, which steps are replaced in Procedure III with Steps 5*b*, 5*c* and 5*d*, as set forth below:

STEP 5*b*. Monitor a predetermined area of the intersection of phases A and B by means of phase A caution presence detectors D5*a* and D5*d* for the presence of a vehicle within the area of influence of either detector.

STEP 5*c*. Recognize the presence of a vehicle in the areas of influence of phase A caution detectors D5*a* or D5*d*, and develop a phase A caution presence signal so long as a vehicle is present in the area of influence of either detector.

STEP 5*d*. Utilize the phase A caution presence signal to control the time duration of a phase A caution signal display so that the signal is displayed as long as a caution presence signal is in existence, i.e., so long as a vehicle remains in the area of influence of detector D5*a* or D5*d*.

Upon the completion of Step 5*d*, i.e., when a vehicle is no longer present in the area of influence of either detector D5*a* or D5*d*, Procedure II Steps 6, 7 and 8 may be practiced in the event that it is desirable to provide an all red clearance signal to phases A and B, or if not, then upon the termination of the phase A caution signal, Steps 1 through 5*d* are repeated for controlling phase B traffic flow.

APPARATUS FOR PRACTICING PROCEDURE III

Referring now to FIG. 6, there is schematically illustrated an apparatus taking the form of a two phase, full actuated presence detector controller LC–2 for practicing Procedure III, described hereinabove. Local controller LC–2 is quite similar to controller LC–1, described with reference to FIG. 3, and includes identical circuitry; namely, binary counter BC, binary to decimal converter BDC, and phase A and phase B go signal control circuits C and D. Control circuits C and D are not illustrated in FIG. 6 for purposes of simplifying the description of the invention and, accordingly, reference should be made to FIG. 3 for these circuits. Local controller LC–2 does not include controller LC–1 control circuits E, F, G and H respectively connected to converter BDC output circuit Nos. 2, 5, 3 and 6. Instead, in accordance with this aspect of the invention, converter BDC output circuit Nos. 2 and 5 are respectively connected with a phase A presence caution signal control circuit I and a phase B presence caution signal control circuit J; and, converter BDC output circuit Nos. 3 and 6 are respectively connected with a phase A all red clearance control circuit K and a phase B all red clearance control circuit L.

As will become apparent from the description that follows, each control circuit I and J includes an OR circuit in addition to an AND circuit, a NOT circuit and a PULSE circuit, and each control circuit K and L includes an OR circuit in addition to a NOT circuit, a MULTIPLIER circuit and a PULSE circuit. Other than the OR circuit, each of these circuits has been explained hereinbefore with respect to FIG. 3 and, accordingly, for purposes of facilitating the understanding of this invention only an OR circuit is briefly explained below.

OR circuit. This is a static element circuit having two or more input circuits and one output circuit. A (1) signal is present at its output circuit so long as any one of its input circuits receives a (1) signal. A (0) signal is present at its output circuit so long as none of its input circuits receives a (1) signal.

PRESENCE CAUTION SIGNAL CONTROL CIRCUITS

The internal circuitry of phase A presence caution signal control circuit I and phase B presence caution signal control circuit J are substantially identical, and, accordingly, only control circuit I will be described hereinafter in detail, like components in both circuits being identified in FIG. 6 with like reference characters. Circuit I includes an AND circuit 42 having one of its input circuits connected to converter BDC output circuit No. 2, and its output circuit connected to phase A caution signal light 28A of traffic signal light S–2 (see FIG. 4). The other input circuit of AND circuit 42 is connected to the output circuit of an OR circuit 44 having two input circuits. One of the input circuits of OR circuit 44 is connected to an output circuit of a presence signal generator 46A having its input circuit connected to loop detector D5a. The other input circuit of OR circuit 44 is connected to the output circuit of a presence signal generator 48A having its input circuit connected to loop detector D5d. The output circuit of OR circuit 44 is also connected to the *x* input circuit of a NOT circuit 50 having its *y* input circuit connected to converter output circuit No. 2. The output circuit of NOT circuit 50 is connected to the input circuit of a pulse circuit 52 which, in turn, has its output circuit connected to the input circuit of binary counter BC.

ALL RED CLEARANCE CONTROL CIRCUITS

The internal circuitry of phase A all red clearance control circuit K and phase B all red clearance control circuit L are substantially identical and, accordingly, only control circuit K will be described hereinafter in detail, like components in both circuits being identified in FIG. 6 with like reference characters. Control circuit K includes a MULTIPLIER circuit 54 having a first output circuit connected to an all red clearance signal light 56 of traffic signal S–2, and a second output circuit connected to the *y* input circuit of a NOT circuit 58. The *x* input circuit of NOT circuit 58 is connected

to the output circuit of an OR circuit **60**. The OR circuit **60** has four input circuits, one of which is connected to the output circuit of presence signal generator **46A** which, in turn, has its input circuit connected to loop detector D5*a*. Another input circuit of OR circuit **60** is connected to the output circuit of a presence signal generator **48A** which, in turn, has its input circuit connected to loop detector D5d. A third input circuit of OR circuit **60** is connected to the output circuit of a presence signal generator **46B** which, in turn, has its input circuit connected with loop detector D5*c*. A fourth input circuit of OR circuit **60** is connected to the output circuit of a presence signal generator **48B** which, in turn, has its input circuit connected with loop detector D5*b*. The output circuit of NOT circuit **58** is connected to the input circuit of a PULSE circuit **62** which, in turn, has its output circuit connected to the input circuit of binary counter BC.

OPERATION

The operation of presence detector traffic controller LC–2 is similar to that described hereinbefore with respect to controller LC–1 illustrated in FIG. **3** and, accordingly, only the variations therefrom will be described hereinafter in detail. The variations are with respect to control circuits I and K for phase A, and control circuits J and L for phase B.

Upon the termination of phase A go extension interval No. **2**, described previously with respect to FIG. **3**, a (1) signal pulse is applied to the input circuit of binary counter BC which advances the controller LC–2 to de-energize converter output circuit No. **1** and energize converter output circuit No. **2**. Thus, a (1) signal is applied from output circuit No. **2** to one of the two input circuits of AND circuit **42**, as well as to the *y* input circuit of NOT circuit **50**. If no vehicles are present within the area of influence of phase A caution loop detector D5*a* or D5*d*, then OR circuit **44** applies a (0) signal from its output circuit to the *x* input circuit of NOT circuit **50**. Accordingly, a (1) signal is applied from the output circuit of NOT circuit **50** to the input circuit of PULSE circuit **52** which converts the signal into a (1) signal pulse for application to the input circuit of binary counter BC. This advances the controller to de-energize converter output circuit No. **2** and energize converter output circuit No. **3**. However, if a vehicle is in the area of influence of either loop detector D5*a* or D5*d*, then a (1) signal is present on the output circuit of OR circuit **44**. This prevents a (1) signal from appearing on the output circuit of NOT circuit **50** and completes the second of the two input circuits of AND circuit **42** for energizing phase A caution signal light **28A**. Signal light **28A** remains energized so long as a vehicle is present in the area of influence of loop detector D5*a* or D5*d*. If a vehicle was present and then left the area of influence of both loop detectors D5*a* and D5*d*, a (1) signal will not be present on the output circuit of OR circuit **44**. This will de-energize the phase A caution signal light **28A**. Also, since a (1) signal is not present at the *x* input circuit of NOT circuit **50**, and a (1) signal is present on the *y* input circuit, then a (1) signal is applied from the output circuit of NOT circuit **50** to the input circuit of PULSE circuit **52** which converts the signal to a (1) signal pulse for application to binary counter BC. This advances the controller to de-energize converter output circuit No. **2** and energize output circuit No. **3**.

With converter BDC output circuit **3** energized, a (1) signal is applied through MULTIPLIER circuit **54** to energize the all red clearance light **56** to display a stop signal to both phase A and phase B. Also, a (1) signal is applied through MULTIPLIER circuit **54** to the *y* input circuit of NOT circuit **58**. So long as a vehicle is present in the area of influence of loop detector **D5**, i.e., any of its sub-loop portions D5*a*, D5*b*, D5*c* or D5*d*, a (1) signal is present at the output circuit of OR circuit **60**, as well as on the *x* input circuit of NOT circuit **58**. Thus, a (1) signal is not present on the output circuit of NOT circuit **58** and, accordingly, the all red clearance light **56** remains energized. However, when no vehicle is present in the area of influence of loop detector **D5**, i.e., not present in either the area of influence of either loop detector D5*a*, D5*b*, D5*c* or D5*d*, a (1) signal is not present at the *x* input circuit of NOT circuit **58**. Thus, a (1) signal is present on the output circuit of NOT circuit **58** which is converted into a signal pulse by PULSE circuit **62** for application to binary counter BC. This advances the controller to de-energize converter BDC output circuit No. **3** and energize output circuit No. **4**.

The operation of control circuits D, J and L for phase B traffic flow is identical with that just described with respect to control circuits C, I and K and, accordingly, no further description is deemed necessary for complete understanding of the operation of local controller LC–2.

Although the invention has been shown in connection with various preferred procedures for practicing a method in accordance with the invention, as well as apparatus for its practice, it will be readily apparent to those skilled in the art that various changes in procedure, as well as in form and arrangement of parts, may be made to suit requirements without departing from the spirit and scope of the invention as defined by the appended claims.

What is claimed is:

1. In a traffic control system for controlling the operation of traffic signal means displaying at least go and caution signals to traffic in each of at least first and second intersecting traffic lanes each providing for traffic movement in a distinct direction the improvement comprising:

first and second presence detector means for respectively monitoring an area in the path of said first lane and an area in the path of said second lane, said areas being adjacent to the intersection of said lanes and providing first and second presence signals so long as traffic is present in said respective areas,

signal control means for controlling said signal means to display a go signal to traffic in said first lane so long as said second presence signal is not provided, said signal control means including circuit means for timing an extended go interval for said go signal display to traffic in said first lane upon the occurrence of said second presence signal being provided during a period in which said first presence signal is provided, said signal control means comprising a counter means for completing successive output circuits in response to successive

stepping of said counter, one of said output circuits being operatively connected for actuating a go signal, one of said output circuits being operatively connected for energizing a caution signal, said counter being stepped by said first and second presence signals from said first and second detector means, means for energizing the first lane caution circuit in response to termination of the first lane go signal, means for energizing the second lane caution signal in response to completion of the second lane go signal, each caution signal energizing means for a selected lane being arranged to render caution signals in response to the presence detector means in the traffic lane of said selected signal.

2. A method of controlling the operation of traffic signal means displaying go, caution and stop signals to traffic in each of at least first and second intersecting traffic lanes each providing for traffic movement in a distinct direction and comprising the steps of;

energizing said traffic signal means to display a go signal to traffic in said first lane and a stop signal to traffic in said second lane;

during said go signal display to traffic in said first lane, electrically sensing whether traffic is present in a predetermined area in each of said first and second lanes and providing first and second presence signals so long as traffic is present in said respective areas;

forming sequencing signals;

counting such sequencing signals;

producing traffic signal-energizing signals successively in response to such sequencing signals;

utilizing said first and second presence signals for activating said traffic signal energizing signals to control the energization of said traffic signal means so that said go signal is displayed to traffic in said first lane so long as only said first presence signal is provided, and then when said second presence signal is also provided initiating termination of said go signal display to traffic in said first lane.

3. A method as set forth in claim 2, wherein said step of initiating termination of said go signal display to traffic in said first lane includes the step of first electrically timing an extended go period during which said signal means is energized to display a go signal to traffic in said first lane and then energizing said signal means to display only a caution signal to traffic in said first lane.

4. In a traffic control system for controlling the operation of traffic signal means displaying traffic commands to traffic in at least first and second intersecting traffic lanes each providing for traffic movement in a distinct direction wherein the traffic commands displayed to traffic in each lane sequentially include at least one go interval and a caution interval, the improvement comprising:

solid state traffic interval sequencer means for receiving trigger signals providing interval signals sequentially and upon receipt of each said trigger signal allocating a different one of said intervals to one of said lanes;

first and second presence detector means for respectively monitoring an area in the path of said first lane and an area in the path of said second lane, said areas being adjacent to the intersection of said lanes and providing first and second presence signals so long as traffic is present in the respective areas;

sequencer control means for applying said trigger signals to said sequencer means, and including go signal control means for receiving said first and second presence signals to control said sequencer means to allocate a go signal interval to said first lane so long as said first presence signal is provided and said second presence signal is not provided.

5. In a traffic control system as set forth in claim 4, a combination wherein said go signal control means includes circuit means for timing an extended go interval in response to said second presence signal being provided during the period that said first presence signal is provided and then providing one of said trigger signals for application to said sequencer means to allocate said caution interval to said first lane.

6. In a traffic control system as set forth in claim 4, a combination wherein said sequencer means includes an input circuit for receiving said trigger signals and a plurality of output circuits which are selectively energized in accordance with the number of trigger pulses applied to said input circuit, said output circuits adapted to be coupled to said signal means for energizing said signal means to display traffic commands in dependence upon which of said output circuits are energized.

7. Traffic control apparatus comprising traffic signal means for indicating right-of-way to at least two intersecting traffic lanes each providing for traffic movement in a distinct direction, respective presence detector means for monitoring areas in the paths of said lanes, said areas being adjacent to the intersection of said lanes and for providing respective presence signals in response to the presence of traffic in said areas, and signal control means for causing said signal means to indicate right-of-way to traffic in any first one of said lanes and to deny right-of-way to traffic in any second one of said lanes, said signal control means including first responsive means responsive to a presence signal from said second lane in the absence of a presence signal from said first lane, and second responsive means responsive to a presence signal from said second lane in the presence of a presence signal from said first lane, so that said signal control means causes the indication given by said signal means to change substantially immediately, or after a delay, when said first or second responsive means responds, respectively.

8. A method for controlling the operation of traffic signal means for displaying alternately go and stop signals to traffic in at least first and second intersecting traffic lanes each providing for traffic movement in a distinct direction and comprising the steps of:

a. energizing said traffic signal means to display a go signal to traffic in said first lane and a stop signal to traffic in said second lane;

b. creating a first electrical signal when traffic is present in a first preselected area of said second lane, said first area being adjacent the intersection of said first and second traffic lanes;

c. creating a second electrical signal when traffic is present in a second preselected area of said first lane, said second area of said first lane being adjacent the intersection of said first and second traffic lanes;

d. providing alternative circuit means for creating, upon existence of said first signal, either a third electrical signal upon concurrent existence of said first and said second signals or a fourth electrical signal upon existence of said first signal and absence of said second signal:

e. terminating said go signal to traffic in said first lane in a first time upon creation of said fourth signal;

f. alternatively terminating said go signal to traffic in said first lane in a second time greater than said first time upon receipt of said third signal; and,

g. giving preference to said alternate termination.

9. A system for controlling the operation of traffic signal means for displaying alternately go and stop signals to traffic in at least first and second intersecting traffic lanes each providing for traffic movement in a distinct direction, said system comprising:

a. means for energizing said traffic signal means to display a go signal to traffic in said first lane for a duration and a stop signal to traffic in said second lane during said duration;

b. means for creating a first electrical signal when traffic is present in a preselected area of said second lane, said area being adjacent the intersection of said first and second traffic lanes;

c. means for creating a second electrical signal when traffic is present in a preselected area of said first lane, said area of said first lane being adjacent the intersection of said first and second traffic lanes;

d. means for extending the duration of said display of said go signal to traffic in said first traffic lane; and,

e. means responsive to the concurrent existence of said first and second signals for causing operation of said extension means.

10. A system for controlling the operation of traffic signal means for displaying alternately go and stop signals to traffic in at least first and second intersecting traffic lanes each providing for traffic movement in a distinct direction, said system comprising:

a. means for energizing said traffic signal means to display a go signal to traffic in said first lane for a duration and a stop signal to traffic in said second lane during said duration;

b. means for creating a first electrical signal when traffic is present in a preselected area of said second lane, said area being adjacent the intersection of said first and second traffic lanes;

c. means for creating a second electrical signal when traffic is present in a preselected area of said first lane, said area of said first lane being adjacent the intersection of said first and second traffic lanes;

d. means for maintaining said go signal displayed to traffic in said first lane until said first signal is created;

e. first termination means for terminating said go signal display to traffic in said first lane upon creation of said first signal;

f. means for blocking operation of said first terminating means upon concurrent existence of said first and second signal;

g. second means for terminating said go signal displayed to traffic in said first traffic lane upon concurrent existence of said first and second signals, and

h. said second termination means including a timing device for extending the time of termination of said go signal displayed to traffic in said first lane by a preselected amount.

11. A system for controlling the operation of traffic signal means for displaying alternately go and stop signals to traffic in at least first and second traffic lanes each providing for traffic movement in a distinct direction, said lanes intersecting at an intersection area including both of said lanes, said system comprising:

a. means for cycling said signal means between a first cycle portion having a first given time length and displaying a go signal to traffic in said first lane and a stop signal to traffic in said second lane and a second cycle portion having a second given time length and displaying a stop signal to traffic in said first lane and a go signal to traffic in said second lane;

b. means for creating a third cycle portion between said first and second cycle portions with a stop signal displayed to traffic in both said first and second traffic lanes;

c. a presence detector means for creating an electrical signal when a vehicle is in said intersection area;

d. means for terminating said first portion of said cycle;

e. means responsive to termination of said first portion of said cycle and responsive to said electrical signal for energizing said third cycle creating means;

f. means for maintaining said third cycle means energized for the duration of said electrical signal; and,

g. means for initiating said second cycle portion when said electrical signal ceases.

12. A traffic control device for controlling the operation of traffic signal means for displaying go and stop signals to traffic in at least first and second traffic lanes each providing for traffic movement in a distinct direction, said lanes intersecting at an intersection area including both of said lanes, said device comprising:

a. first detecting means for detecting the presence of traffic in a first preselected area, said area being adjacent said intersection area;

b. second detecting means for detecting the presence of traffic in a second preselected area, said second preselected area being adjacent said intersection area;

c. sequencing means having a first output for initiating a first cycle portion when a go signal is displayed to traffic in said first traffic lane and a stop signal is displayed to traffic in said second traffic lane, second output means for initiating a second cycle portion with a stop signal displayed to traffic in said first traffic lane and a go signal displayed to traffic in said first traffic lane and means for shifting between said first and second output means;

d. stepping means responsive to said first and second detecting means for causing said sequencing means to shift between said first and second outputs;

e. means for sensing the concurrent detection of traffic by both said first and second detecting means; and,

f. means for extending said first cycle portion in response to said sensing means and independent of said second cycle portion.

13. A device as defined in claim 12 wherein said sequencing means is a binary counter.

14. A device as defined in claim 12 including:

g. means for creating a third cycle portion between said first and second cycle portions, said third portion displaying a stop signal to traffic in both of said lanes;

h. third detecting means for detecting the presence of traffic in said intersection area;

i. means responsive to said third detecting means for initiating said third cycle creating means upon energization of said stepping means; and,

j. means independent of said first and second cycle portions for maintaining said third cycle until all traffic leaves said intersecting area.

15. In a traffic control system for controlling operation of traffic signal means displaying go and stop signals to traffic in first and second traffic lanes each providing for traffic movement in a distinct direction, said lanes intersecting at an intersection area, the improvement comprising:

a. all red clearance control means for controlling the said signal means to display simultaneously a stop signal to traffic in both of said lanes; and,

b. said all red clearance control means including first circuit means adapted to be coupled to presence detector means located in said intersection area for providing an all red presence signal so long as traffic is present in said area, and second circuit means for maintaining said stop signals displayed to both of said lanes so long as said all red presence signal is developed by said presence detector means.

16. In a traffic control system for controlling operation of traffic signal means displaying at least go, stop and caution signals to traffic in first and second traffic lanes each providing for traffic movement in a distinct direction, each lane intersecting at an intersection area, the improvement comprising:

a. caution signal control means for controlling the time duration of operation of said caution signal displayed to traffic in each phase;

b. said caution control means including a first presence detector means in the first of said lanes and in said intersection area for generating a first signal when a vehicle is in said first lane and in said intersection area and a second presence detector in said second lane and in said intersection area for generating a second signal when a vehicle is in said second lane and in said intersection area;

c. first control means responsive to said first signal for controlling the length of time said caution signal displayed to traffic in said first lane is on; and,

d. second control means responsive to said second signal for controlling the length of time said caution signal displayed to traffic in said second lane is on.

17. A system for controlling the operation of traffic signal means for displaying alternately go and stop signals to traffic in at least first and second intersecting traffic lanes each providing for traffic movement in a distinct direction, said system comprising:

a. means for energizing said traffic signal means to display a go signal to traffic in said first lane for a duration and a stop signal to traffic in said second lane during said duration;

b. means for creating a first electrical signal when traffic is present in a preselected area of said second lane, said area being adjacent the intersection of said first and second traffic lanes;

c. means for creating a second electrical signal when traffic is absent from said preselected area;

d. means for creating a third electrical signal when traffic is present in a preselected area of said first lane, said area of said first lane being adjacent the intersection of said first and second lanes;

e. means for creating a fourth electrical signal when traffic is absent from said area of said first lane;

f. means for extending the duration of the display of a go signal to traffic in said first lane;

g. first sensing means for sensing the concurrent existence of said first and third electrical signals;

h. means responsive to said first sensing means for causing operation of said duration extending means;

i. second sensing means for sensing the existence of said first and fourth electrical signals; and,

j. means responsive to said second sensing means for blocking operation of said duration extending means.

* * * * *