Jan. 11, 1927. 1,613,959

L. PROPP

PLUG SOCKET

Filed July 23, 1921

Fig. 1.

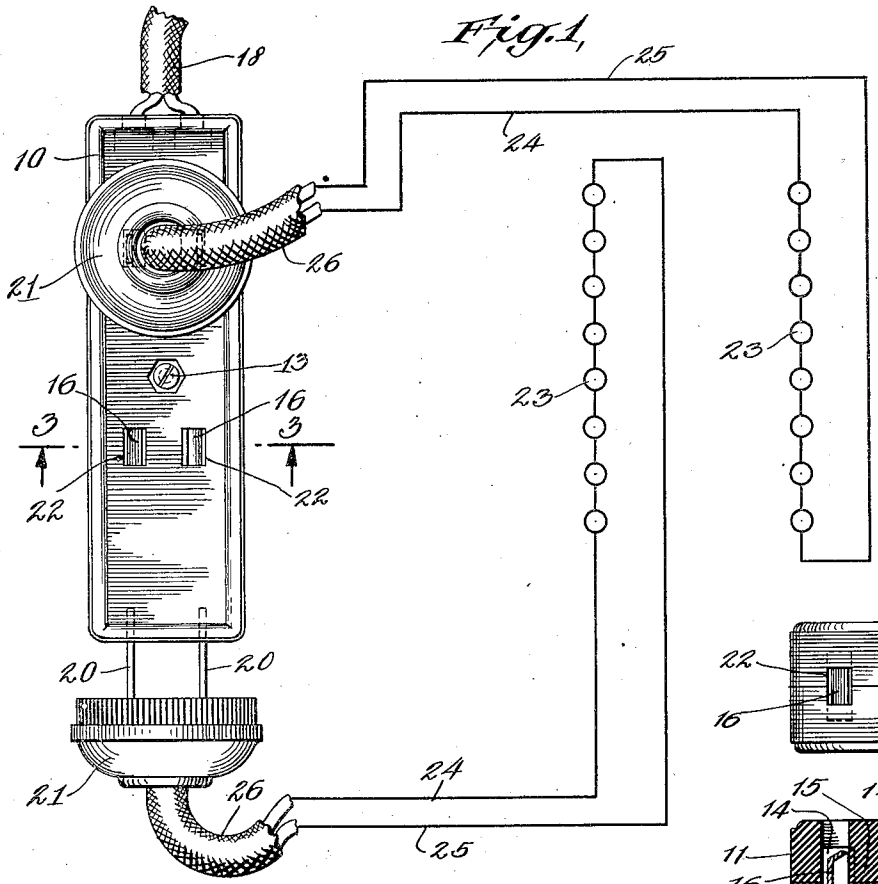

Fig. 2.

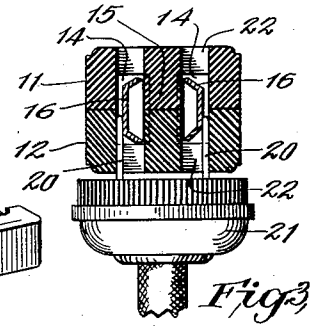

Fig. 3.

Fig. 5.

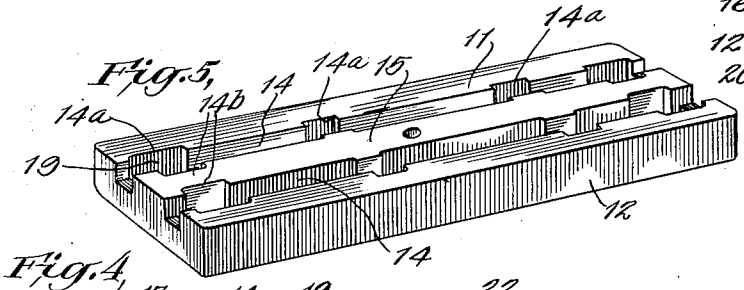

Fig. 4.

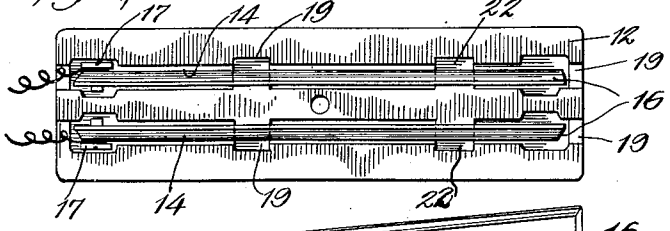

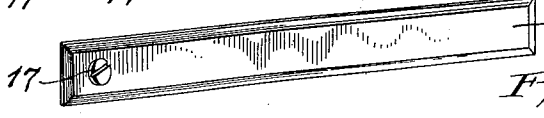

Fig. 6.

INVENTOR
LOUIS PROPP
BY
Morris Fineshriber
ATTORNEY

Patented Jan. 11, 1927. 1,613,959

UNITED STATES PATENT OFFICE.

LOUIS PROPP, OF NEW YORK, N. Y.

PLUG SOCKET.

Application filed July 23, 1921. Serial No. 487,204.

This invention relates to electrical plug sockets.

More particularly, this invention relates to plug sockets adapted for use with Christmas tree outfits or display window lighting, or the like decorative electric devices, employing festoons of electric lamps or other such appliances. One object thereof is to provide a device of this character whereby one or more festoons of lamps may be independently connected to the electric supply.

Another object is to provide in combination with a plug socket of the character described, a unit or festoon adapted to be connected thereto of such construction as to permit any number of such units to be independently connected to the source of electric supply.

A further object is to provide a practical device of the character described which shall be simple and compact in construction and cheap to manufacture.

Other objects of this invention will in part be obvious and in part hereinafter pointed out.

The invention accordingly consists in the features of construction, combinations of elements and arrangement of parts which will be exemplified in the construction hereinafter described and of which the scope of invention will be indicated in the following claims.

In the accompanying drawing, in which is shown one of various possible illustrative embodiments of this invention,

Fig. 1 is a plan view of a plug socket embodying this invention showing the same in use with several units or festoons of lamps connected thereto;

Fig. 2 is an end view of the socket;

Fig. 3 is an end cross-sectional view taken along line 3—3 of Fig. 1 of the socket with a connecting plug in place thereon;

Fig. 4 is a plan view of the plug socket with one-half of the two part casing removed to show the interior;

Fig. 5 is a perspective view showing one-half of the two-part casing of the socket; and

Fig. 6 is a perspective view of the metal conducting bar of the plug socket.

Referring in detail to the drawing, the plug socket embodying the invention there shown comprises a casing 10 of insulating material consisting of halves 11 and 12 adapted to be secured together by means such as a counter-sunk screw 13. Each of the halves is formed on the interior thereof with a pair of longitudinal channels 14 preferably of the shape shown in Fig. 5 and which are arranged in each half symmetrically with respect to a medial dividing wall 15. Enclosed within the casing is a pair of connectors 16 preferably of brass and of the shape as shown in Fig. 6, so as to fit snugly into the channels 14 when the two halves are put together. At one end of each connector is a binding post or connecting screw 17 to which are attached the lead wires from the mains as shown at 18 in Fig. 1.

The walls of the channels 14 are indented at spaced intervals as at 14^a and the medial wall 15 of the casing correspondingly indented as at 14^b so as to form between each pair of the indented walls 14^a and 14^b a socket 19 for the reception of one of the connecting members 20 of the plug 21. It will be understood of course that the indented walls 14^a and 14^b extend the complete depth of the half of the casing, thus providing on the front and rear thereof a plurality of openings 22. The current may thus be tapped from a connector 16 by inserting a plug 21 into any of the openings 22, each connecting member 20 entering into its corresponding recess 19 and frictionally engaging these plugs so as to give good electrical contact. Any number of openings 22 of the character hereinbefore described may be provided, thus making it possible to connect one or more of these plugs simultaneously to the socket for the purpose of supplying one or more independent circuits. In the embodiment of the invention shown in the drawing, the plug socket is applied to supplying festoons from miniature lamps 23 connected in series with the lead wires 24, 25 issuing from the plug socket.

The unit or festoons of lamps provided in connection with the attachment plug will now be described. This comprises a plurality of miniature lamps 23 connected in series by the leads 24 and 25 issuing from the lamp cord 26.

The free end of the unit is provided with a plug 21 having extending therefrom a pair of contact members 20 whereby the connection is made to the mains as already described.

It will be readily understood that any number of units may be used as desired by

plugging in each pair of the openings 22 on both sides and ends of the casing as shown in Fig. 1. Instead of keeping in stock festoons of lamps of different arrangement, such for example as eight in series, or a festoon having two rows of eight in series, each connected in parallel or three or four such multiple rows, a dealer may keep in stock units such as just described and separate units will be sold where a single unit of several rows of lamps arranged in multiple lines would have been necessary. Thus, a dealer does not have to run the risk of being over-stocked in the various kinds of multiple units. Furthermore, in the practical use such as in lighting a Christmas tree with units herein provided, there is the advantage that if anything goes wrong with the circuit, the bad unit may be disconnected very readily without affecting the rest of the lights of the tree. This is not possible where multiple units are used. Electrical trouble is furthermore more readily located where the single units and attachment plug provided by this invention are employed.

It will thus be seen that there is provided a device in which the several objects of this invention are achieved and which is well adapted to meet the conditions of practical use.

As various possible embodiments might be made of the above invention and as various changes might be made in the embodiment above set forth, it is to be understood that all matter herein set forth or shown in the accompanying drawings is to be interpreted as illustrative and not in a limiting sense.

Having thus described my invention, I claim as new and desire to secure by Letters Patent:—

1. In an electric plug socket, an insulating casing formed of two halves, said halves being recessed on their interiors to form, when secured together, a pair of longitudinal channels, the casing having opposed openings communicating with the channels from the outer faces thereof, a pair of flattened conductor bars within said channels, extending laterally equal distances beyond the dividing line of the casing halves, the casing and bars being of such a width as to permit simultaneous insertion of plugs in each of said openings.

2. In a unit for connecting a series of electrical appliances, an insulating casing formed of two halves, said halves being recessed interiorly to form, when secured together, a pair of longitudinal channels, the casing having opposed openings communicating with the channels from the outer faces thereof and openings communicating with the channels at the ends of the casing, conductor bars within said channels of such a width as to permit simultaneous insertion of plugs in each of said openings.

3. A multiple plug socket connector comprising a two-part casing of insulating material having spaced recesses extending longitudinally thereof to provide channels separated by a partition of insulating material, the walls of the channels being cut away at spaced intervals so as to provide opposed socket openings communicating with the exterior of the casing and adapted to receive simultaneously plug members in each of said openings, and electrical conductors located in said channels and accessible through said openings for electrical connection with said plug members with the exterior surface of said conductors.

4. A multiple plug socket, a connector comprising a two-part casing of insulating material, said parts being similar, each having spaced recesses extending longitudinally thereof so as to provide channels separated by a partition of insulating material, the walls of the channels and the end walls of the casing being cut away to form opposed socket openings extending through the sides and ends of the casing to provide spaced sockets at the sides and ends of the casing, and electrical conductors located in said channels, the casing and bars being of such a width as to permit simultaneous insertion of plugs in each of said sockets.

Signed at New York city, in the county of New York and State of New York, this 21st day of July, 1921.

LOUIS PROPP.