March 21, 1961 F. BUDRECK 2,975,497

SEPARABLE TWO-PART MAGNETIC CONNECTOR

Filed Oct. 7, 1959 2 Sheets-Sheet 1

Fig. 1

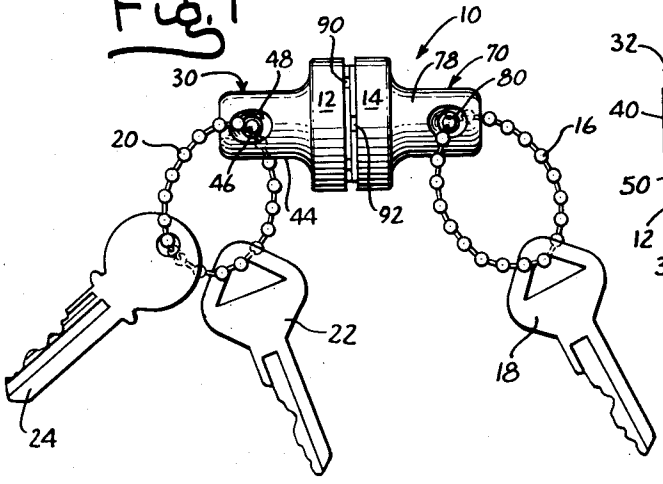

Fig. 3

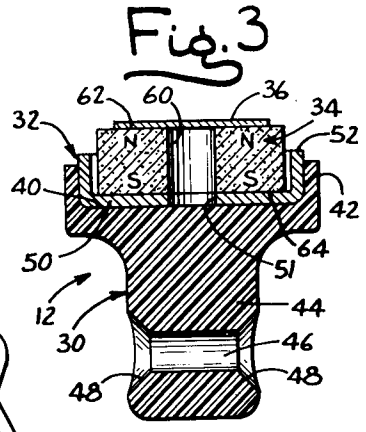

Fig. 2

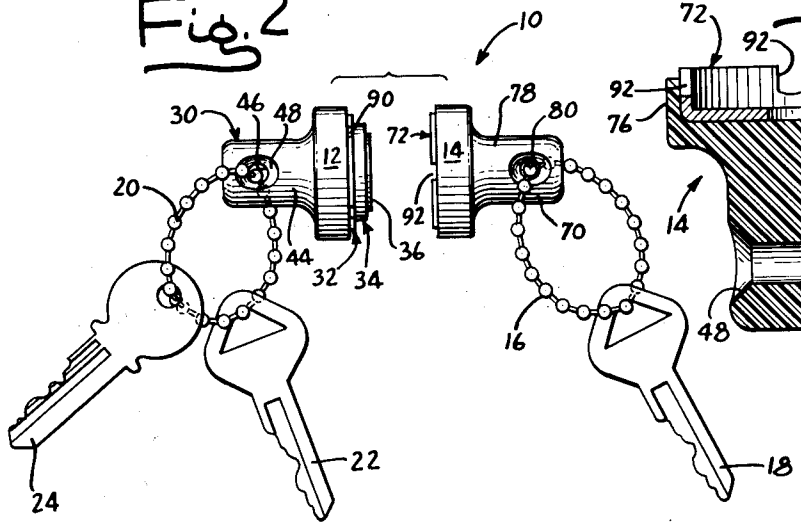

Fig. 4

INVENTOR
FRANCES BUDRECK

by: Norman P. Berlad
ATTY.

March 21, 1961 F. BUDRECK 2,975,497

SEPARABLE TWO-PART MAGNETIC CONNECTOR

Filed Oct. 7, 1959 2 Sheets-Sheet 2

Fig. 6

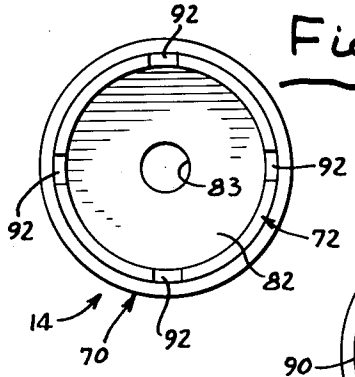

Fig. 5

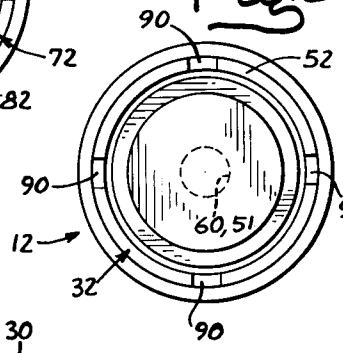

Fig. 7

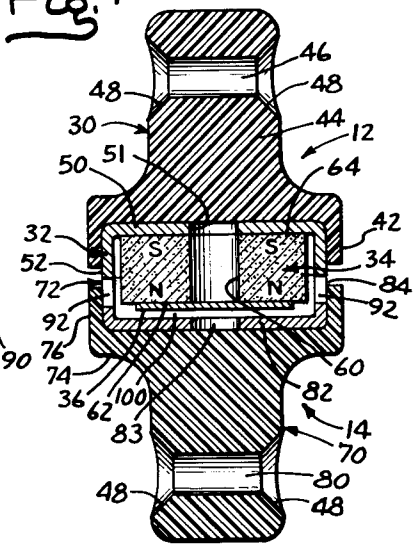

Fig. 8

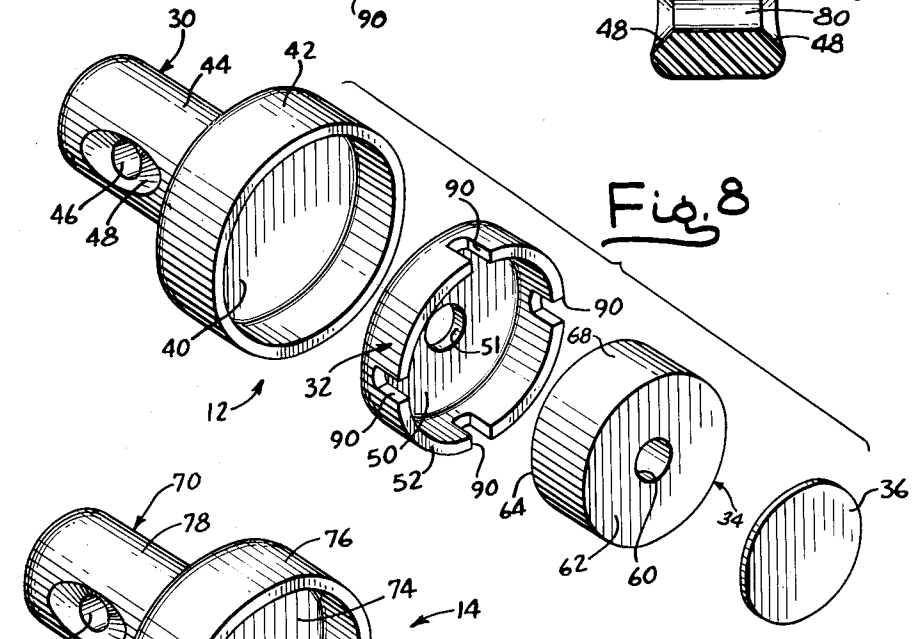

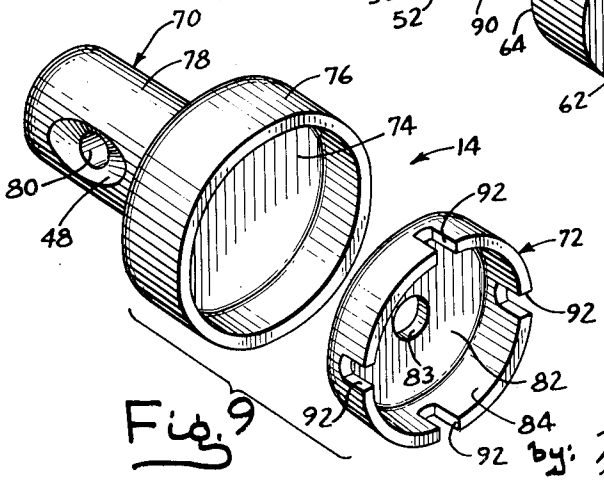

Fig. 9

INVENTOR
FRANCES BUDRECK

by: Norman Siegel

ATTY.

United States Patent Office 2,975,497
Patented Mar. 21, 1961

2,975,497

SEPARABLE TWO-PART MAGNETIC CONNECTOR

Frances Budreck, Chicago, Ill., assignor to Monarch Tool & Machinery Co., Chicago, Ill., a corporation of Illinois

Filed Oct. 7, 1959, Ser. No. 845,026

5 Claims. (Cl. 24—201)

The improved separable two-part magnetic connector comprising the present invention is versatile in its application and is capable of many uses. The connector has been illustrated and described herein as being in the form of a separable key chain connector which is designed for use in connection with the parking or storage of automobiles and other motor vehicles in public parking lots, garages and the like. Such separable key chain assemblies consist of two independent key chains, one of which is adapted to retain a single ignition key and the other of which may retain a reserve ignition key and a glove compartment and trunk key. The two chains are releasably connected together, usually by a push-pull snap connection so that upon leaving an automotive vehicle in a public parking place, the single ignition key may be left in the ignition lock for use by the attendant while the chain containing the reserve ignition key and glove compartment and trunk key may be retained by the vehicle owner. The attendant is thus precluded from access to either the glove compartment or the trunk but he is able to operate the vehicle.

The separable two-part magnetic connector of the present invention is comprised of a magnet assembly which, as a whole, constitutes one of the parts, and an armature assembly which, as a whole, constitutes the other part. When the separable connector of the present invention is employed in this manner as a detachable key chain holder, the reserve keys are preferably associated with the permanent magnet assembly while the single ignition key is associated with the armature assembly. Since the automobile owner retains the permanent magnet assembly at all times, i.e., singly when the armature assembly is left in the vehicle, and in combination with the armature assembly when both parts are in his possession, he has at all times at his disposal a small permanent magnet assembly which he may use as he sees fit to pick up small magnetic articles such as pins or nails, to test or distinguish ferrous articles or materials from non-ferrous articles or materials, to attach the reserve key chain in a concealed place, as, for example, beneath the cowl or a fender if he does not prefer to carry the assembly with, or otherwise to use the magnet in any manner in which small permanent magnet assemblies are customarily used.

The invention is, however, capable of a wide variety of other uses and permanent magnet and armature assemblies constructed in accordance with the principles of the present invention may be employed as a refrigerator, cabinet, or other door latch. Another specific use of this nature which has been contemplated is in connection with the provision of latches for trailer doors or doors on other moving vehicles where looseness which may develop in the hinges would ordinarily lead to rattling or squeaking of the door. Because, as will be set forth in detail presently, the present connector makes provision for prevention of lateral or transverse shifting of the armature relative to the magnet, any parts which are fixedly attached to the permanent magnet

connector and armature assembly respectively will be held against shifting movement relative to each other in a lateral direction or, in fact, in any direction whatsoever. This prevention of lateral shift between the permanent magnet and its armature, in a permanent magnet and armature assembly of this general character, constitutes one of the principal features or objects of the present invention and thus renders it especially useful as a door lock on moving vehicles.

It is another object of the invention to provide an assembly of the general character briefly outlined above which involves a novel disposition of the magnet, its pole piece, and the armature, these parts being designed so that the flux in the magnet-holding circuit is concentrated in a small contact area, thus making possible a high flux density and attaining increased magnet-holding power. By virtue of such increased holding power, the overall size of the assembly may be very materially reduced.

Numerous other objects and advantages of the invention not at this time enumerated, will become more readily apparent as the following description ensues.

In the accompanying two sheets of drawings forming a part of this specification, one illustrative embodiment of the invention has been shown.

In these drawings:

Fig. 1 is a perspective view of a separable key chain assembly employing the improved permanent magnet and armature assembly of the present invention;

Fig. 2 is a side elevational view of the structure shown in Fig. 1 with the two parts of the assembly slightly separated;

Fig. 3 is an enlarged sectional view taken substantially along the line 3—3 of Fig. 2;

Fig. 4 is an enlarged sectional view taken substantially along the line 4—4 of Fig. 2;

Fig. 5 is an inside end view of the structure shown in Fig. 3;

Fig. 6 is an inside end view of the structure shown in Fig. 4;

Fig. 7 is a longitudinal sectional view taken substantially centrally through the permanent magnet and armature assembly of Fig. 1;

Fig. 8 is an exploded perspective view of the magnet assembly; and

Fig. 9 is an exploded perspective view of the armature assembly.

Referring now to the drawings in detail, and in particular to Figs. 1 and 2, the separable key chain assembly illustrated herein for exemplary purposes has been designated in its entirety at **10**. The assembly involves in its general organization a permanent magnet assembly **12** and an armature assembly **14**. The armature assembly has associated therewith a conventional ball and link key chain carrying an automobile ignition key **18**, while the permanent magnet assembly has associated therewith a similar key chain **20** carrying a reserve ignition key **22** and a trunk lock key **24**. As will be described in greater detail presently, the magnet assembly **12** and armature assembly **14**, when disposed in approximate longitudinal alignment and position of close proximity, are attracted to each other so that the two key chains **16** and **20** are held together as a unit, but the same may be separated from each other merely by manually pulling the magnet assembly and the armature assembly apart so that the armature associated with the latter assembly moves out of the field of the magnet associated with the former assembly.

The key chains **16** and **20** and the various keys illustrated herein are conventional and no claim is made to any novelty associated therewith. Neither is any novelty predicated upon the attachability of the two key chains

inasmuch as separable key chains designed for the same purpose and embodying mechanical spring detent means for their separation are well known in the art. The invention consists rather in the novel construction, combination, and arrangement of parts of the permanent magnet assembly 12 and its associated armature assembly 14, these parts having utility in connection with structures other than key chain holders.

Referring now specifically to Figs. 3, 5 and 7, the permanent magnet assembly may assume various external configurations, but in the embodiment illustrated herein, it is of circular cross sectional shape throughout. The assembly includes four principal parts including an outer generally cup-shaped shell or holder 30, an inner cup-shaped pole piece and magnet retainer 32, a permanent magnet 34, and a second pole piece 36. The holder or shell 30 is preferably formed of a non-magnetic material such as a suitable thermoplastic or thermosetting resin. The two pole pieces 32 and 36 are formed of magnetic material such as mild steel. The magnet proper 34 is a ceramic magnet of the mixed ferrite type, such magnets being a comparatively recent development in the field of permanent magnet construction and possessing greatly improved magnetic properties over permanent magnets which are constructed of metallic alloys.

One such magnetic material capable of being employed in connection with the present invention for construction of the magnet 34 is the material known as "Indox," a development of the Indiana Steel Products Company of Valparaiso, Indiana. This barium-ferrite material is characterized by the fact that it is electrically non-conductive. The material is extremely resistant to demagnetizing influences and evidences very low eddy current losses. Indox is a magnetic material which exhibits extremely high coercive force, a low remanence and high permeability. Because of these characteristics of this permanent magnet material, the magnetic length thereof need be but a fraction of that required for the ferrous alloys in attaining the same magnetic pull for a given magnet size. Where barium-ferrite ceramic materials are concerned, magnetic stability is pronounced and permanent magnets of this character maintain their magnetic strength despite weakening influences such as contact with extraneous magnetic fields and frequent removal and replacement of the magnetic armatures. Additionally, Indox and like ceramic materials are relatively light as compared to the magnetic alloys.

As a magnetic material for holding purposes, the shape characteristics and small sizes which Indox and similar materials may assume for any given attractive power leave little to be desired. For example, such magnetic materials satisfy the requirements of releasable holding devices for refrigerator doors and the like where space is at a premium, where high holding power is required, and where frequent armature attraction and release is encountered. Ceramic magnets of this type are extremely effective even when they are of thin wafer-like design and, accordingly, the magnet 34 illustrated herein is of relatively thin, flat construction and its association in the assembly will be described in greater detail presently.

The outer shell 30 includes a shallow flat cup portion having a flat bottom wall 40 and an upstanding cylindrical side wall 42. The medial region of the bottom wall 40 is provided with a stem 44 having with a diametrically extending hole 46 therethrough near the distal end thereof, the marginal regions of the hole being flared as at 48 for key chain clearance purposes.

The combined pole piece and magnet retainer 32 (which hereafter will be referred to as a pole cup) includes a circular bottom wall 50 and an upstanding cylindrical side wall 52. The pole cup 32 is nested within the cup portion of the shell 30 with a close fit as clearly shown in Fig. 3 and, if desired, it may be cemented within the shell.

The ceramic magnet 34 is in the form of a relatively thin disk which is preferably, but not necessarily, provided with a central opening or bore 60 therethrough. The magnet is magnetized as shown in Fig. 3 to provide poles of opposite polarity on the upper and lower magnet faces 62 and 64, respectively. The lower magnet face 64 is cemented to the bottom wall 50 of the pole cup 32.

The magnetic pole piece 36 is in the form of a flat circular disk which is centered coaxially on the upper face 62 of the magnet and is cemented thereto. In the assembly, this pole piece serves as a protective shield for the face 62 of the magnet.

Referring now to Fig. 4, the armature assembly 14 comprises two parts, namely, an outer shell 70 and an inner armature 72. The shell 70 is substantially identical with the shell 30 of the assembly 12 and it includes a bottom wall 74, an upstanding cylindrical side wall 76, and a stem portion 78 having a key chain receiving opening 80 therethrough. The armature 72 is in the form of a mild steel cup-shaped member substantially identical with the pole cup 32 of the assembly 12 and it includes a circular bottom wall 82 and an upstanding cylindrical continuous side wall 84. The two parts 70 and 72 are nested together in a manner similar to the nesting of the parts 30 and 32 and the inner part is cemented to the outer part in the same manner.

It is to be noted at this point that the pole cup 32 is provided in the circular rim portion of the side wall 52 with a series of four equally spaced notches 90 while the circular rim portion of the side wall 84 of the armature 72 is similarly provided with a series of four equally spaced notches 92.

Referring now to Fig. 7, it will be seen that when the parts are magnetically coupled, the circular rim region of the cylindrical wall 84 of the armature encompasses the outer region of the magnet 34 with very little clearance between the parts so that lateral shifting of the armature and magnet relative to each other is precluded. Prevention of lateral shifting of the armature with respect to the magnet when the armature and magnet are in their magnetically coupled relation is directly attributable to the fact that the over-all width or diameter of the rim or cylindrical side surface 68 of the magnet 34 is but slightly less than the internal diameter of the armature side wall 84. The extreme rim portions of the two cup-shaped members 32 and 72 make circular line contact with each other and are held together by magnetic attraction. The extent of magnetic attraction between the two rim portions is materially enhanced by virtue of the fact that the thin rim of the pole cup 32 effectively concentrates the flux in a narrow band. Such magnetic attraction is further enhanced due to the fact that the meeting rims of the pole cup 32 and armature 72 lie in a plane which is parallel to and substantially midway between the planes of the magnet pole faces 62 and 64 respectively where flux concentration is at a maximum. With the parts thus magnetically coupled, a small clearance exists at 100 between the outer face of the pole piece 36 and the bottom wall 82 of the armature and across which clearance space there exists a strong magnetic pull.

The high degree of magnetic pull which the two assemblies 12 and 14 are capable of exerting each upon the other is to a large extent predicated upon the fact that high flux concentration is effected in the rim of the cylindrical wall 52 of the pole cup 32 so that the flux path is through the two cylindrical walls 52 and 84 and through bottom wall 82 of the armature across the narrow air gap created by virtue of the clearance region 100. This air gap 100 is effective over a wide circular area where the opposed faces of the pole piece 36 and bottom wall 82 respectively approach each other but do not actually meet.

The invention is not to be limited to the exact arrangement of parts shown in the accompanying drawings or

described in this specification as various changes in the details of construction may be resorted to without departing from the spirit of the invention. Only insofar as the invention has particularly been pointed out in the accompanying claims is the same to be limited.

Having thus described the invention what I claim as new and desire to secure by Letters Patent is:

1. A separable two-part magnetic connector comprising in combination, a magnet assembly and a cooperating armature, said magnet assembly comprising a permanent magnet of the barium-ferrite type and in the form of a flat disk presenting oppositely facing pole faces of opposite polarity and a narrow outer rim, and a pole cup of magnetic material and having a bottom wall and a cylindrical side wall, the magnet being nested within said pole cup and having one pole face thereof bonded to said bottom wall, the longitudinal extent of said cylindrical side wall being slightly less than the thickness of the disk whereby the portion of the magnet embodying the other pole face projects outwardly beyond the rim of said cylindrical side wall, said armature comprising a cup-shaped member formed of magnetic material and having a bottom wall and a cylindrical side wall, the longitudinal extent of the armature side wall being slightly greater than the longitudinal extent of the disk less the longitudinal extent of the side wall of the pole cup, the diameter of the two side walls being substantially equal, and said rim of the disk having an overall width slightly less than the diameter of the armature side wall, so that when the magnet and armature are magnetically coupled to the fullest extent of which they are capable, the pole cup will be telescopically received over the outwardly projecting portion of the magnet, the bottom wall of the armature will be slightly spaced from said other pole face of the magnet and lie within the magnetic field thereof, the rim portions of both cylindrical side walls will be in substantially coextensive physical contact and alignment, and the projecting portion of the magnet will be in close proximity to the rim portion of the side wall of the pole cup and prevent shifting of the armature relative to the magnet in a direction to cause misalignment of said rim portions.

2. A separable two-part magnetic connector comprising in combination, a magnet assembly and a cooperating cup-shaped armature of magnetic material, said magnet assembly comprising a permanent magnet of the ceramic type and in the form of a flat circular disk presenting oppositely facing pole faces of opposite polarity and a cylindrical side face, and in addition a pole cup formed of magnetic material and having a bottom wall and a cylindrical side wall, the magnet being nested within said pole cup and having one pole face thereof seated on said bottom wall, the height of said cylindrical side wall being less than the thickness of the magnet whereby the portion of the magnet embodying the other pole face projects outwardly beyond the rim of said cylindrical side wall, said armature having a bottom wall and a cylindrical side wall, the magnet normally having its outwardly projecting portion telescopically nested within the armature with the bottom wall of the armature attracted to said other pole face by its close proximity thereto, the height of the side wall of the armature being less than the thickness of the magnet, the combined height of both side walls being at least equal to the thickness of the magnet and the diameter of the two side walls being approximately equal whereby the rims of said side walls normally meet in substantially coextensive edge-to-edge relationship and alignment at a medial region substantially midway between the planes of said pole faces, the diameter of the magnet being slightly less than the internal diameter of the armature side wall whereby lateral shifting of the armature relative to the pole cup and consequent misalignment of said rims is prevented.

3. As a new article of manufacture, a quickly and readily separable two-part magnetic connector comprising a magnet assembly and a cooperating armature, said magnetic assembly embodying a permanent magnet of the ceramic type and in the form of a flat disk presenting oppositely facing pole faces of opposite polarity and an outer rim, and in addition a pole cup formed of magnetic material and consisting of a bottom wall and a cylindrical side wall, the magnet being nested within said pole cup and having one pole face thereof seated on said bottom wall, the longitudinal extent of said cylindrical side wall of the pole cup being less than the thickness of the magnet whereby the portion of the magnet embodying the other pole face projects outwardly beyond the rim of said cylindrical side wall, said armature comprising a cup-shaped member formed of magnetic material, consisting of a bottom wall and a cylindrical side wall, and adapted telescopically to receive the outwardly projecting portion of the magnet, the armature side wall having its mean diameter substantially equal to that of the pole cup side wall and being adapted when the magnet and armature are magnetically coupled to their fullest extent to have its rim abut directly against the rim of the pole cup side wall, the rim of the magnet having an over-all width or diameter but slightly less than the internal diameter of the armature side wall in order that when said magnet and armature are magnetically coupled to their said fullest extent the armature is prevented from shifting with respect to the magnet in a direction to cause misalignment of the rims of said armature and pole cup side walls, the longitudinal extent of the armature side wall being slightly greater than the thickness of the magnet less the longitudinal extent of the side wall of the pole cup in order that when the magnet and armature are magnetically coupled to their fullest extent the bottom wall of the armature is slightly spaced from said other pole face of the magnet but lies within the magnetic field thereof.

4. A separable two-part magnetic connector as set forth in claim 3 and wherein the side walls of the pole cup and armature are the same in longitudinal extent and are of such combined longitudinal extent that when the magnet and armature are fully magnetically coupled the abutting rims thereof lie in a plane which is disposed substantially midway between the pole faces of the magnet.

5. As a new article of manufacture, a quickly and readily separable two-part magnetic connector comprising a magnet assembly and a cooperating armature, said magnet assembly consisting of a disk-like ceramic magnet structure having end parts with oppositely facing pole faces of opposite polarity and in addition an outer cylindrical rim, said assembly also embodying a pole cup formed of magnetic material and consisting of a flat bottom wall and a cylindrical side wall, the magnet structure being nested within, and fixedly connected to, said pole cup and having one end part thereof seated against said bottom wall of the pole cup, the longitudinal extent of the side wall of the pole cup being less than the thickness of the magnet structure whereby the other end part of said structure projects outwardly beyond the rim of said cylindrical side wall, said armature comprising a cup-shaped member formed of magnetic material, consisting of a flat bottom wall and a cylindrical side wall, and adapted telescopically to receive the outwardly projecting other end part of the magnet structure, the armature side wall having its mean diameter substantially equal to that of the pole cup side wall and being adapted when the magnet structure and armature are magnetically coupled to their fullest extent to have its rim abut directly against the rim of the pole cup side wall, the rim of the magnet structure having its diameter but slightly less than the internal diameter of the armature side wall in order that when said magnet structure and armature are magnetically coupled to their said fullest extent the armature is prevented from shifting with respect to the magnet struc-

ture in a direction to cause misalignment of the rims of the armature and pole cup side wall, the longitudinal extent of the armature side wall being slightly greater than the thickness of said outwardly projecting other end part of the magnet structure in order that when the magnet and armature are magnetically coupled to their said fullest extent the bottom wall of the armature is slightly spaced from the other pole face of the magnet but lies within the magnetic field thereof.

References Cited in the file of this patent

UNITED STATES PATENTS

2,483,031	Avedon	Sept. 27, 1949
2,623,256	Feibelman	Dec. 30, 1952
2,637,552	Watson	May 5, 1953
2,678,228	Gerhardt	May 11, 1954
2,855,242	Holmes	Oct. 7, 1958