C. HALVERSON.

DEVICE FOR BABBITTING PULLEYS.

APPLICATION FILED OCT. 23, 1919.

1,343,128. Patented June 8, 1920.

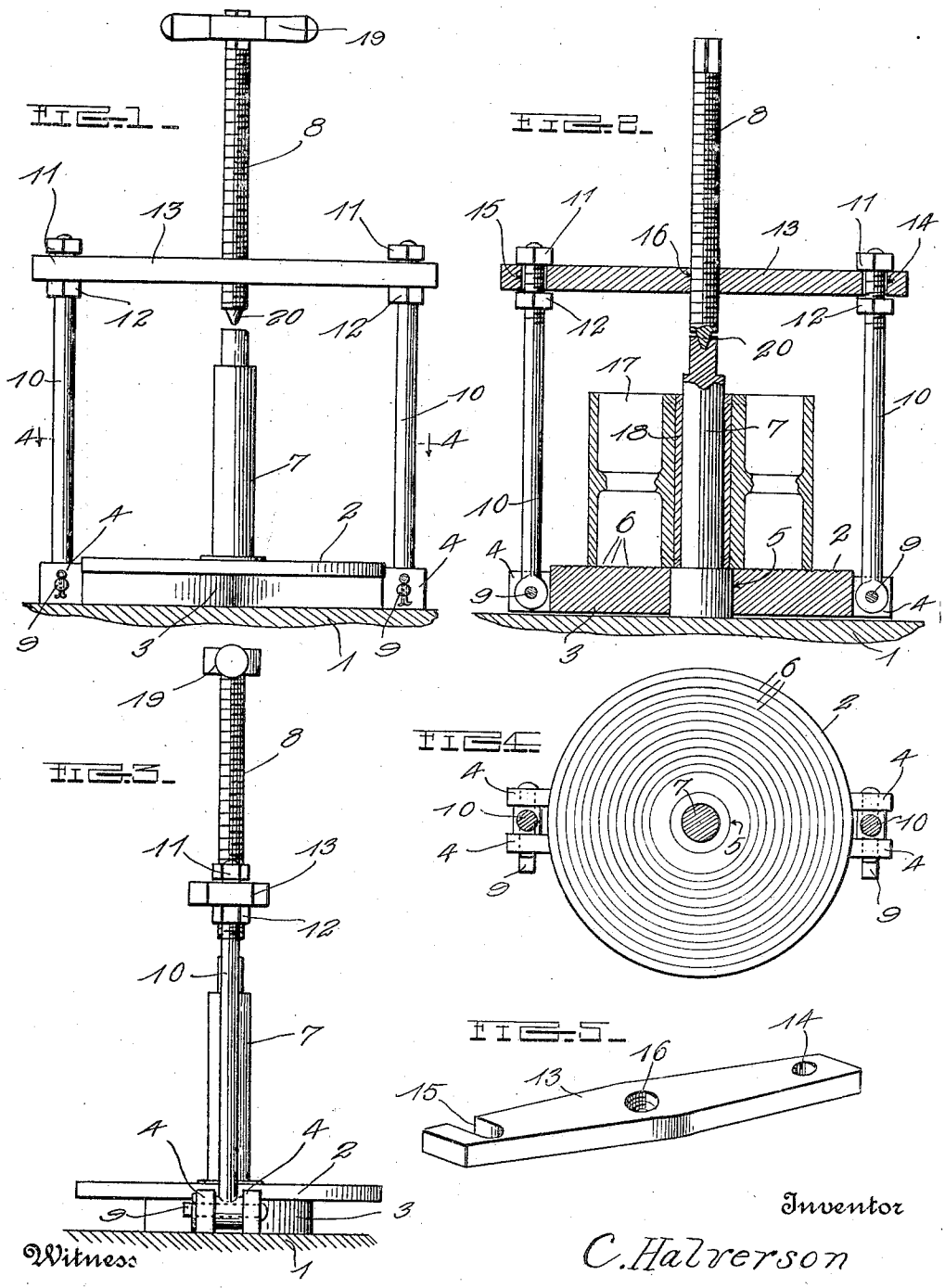

Witness

George W. Giovannetti

Inventor

C. Halverson

By H. B. Willson & Co.

Attorneys

UNITED STATES PATENT OFFICE.

CHRISTIAN HALVERSON, OF SEATTLE, WASHINGTON.

DEVICE FOR BABBITTING PULLEYS.

1,343,128. Specification of Letters Patent. Patented June 8, 1920.

Application filed October 23, 1919. Serial No. 332,725.

To all whom it may concern:

Be it known that I, CHRISTIAN HALVERSON, a citizen of the United States, residing at Seattle, in the county of King and State of Washington, have invented certain new and useful Improvements in Devices for Babbitting Pulleys; and I do declare the following to be a full, clear, and exact description of the invention, such as will enable others skilled in the art to which it appertains to make and use the same.

This invention relates to devices for babbitting pulleys.

One object of this invention is to provide an improved babbitting device which is exceedingly simple of construction and operation, and may be manufactured at a comparatively low cost, being formed of few and simple parts, and which can be quickly and easily collapsed into small space for storage and transportation by disconnecting its component members.

Another object of the invention is to provide a device of this character which insures a direct axial thrust of the mandrel, in spite of ignorance or misuse on the part of the operator when forcing the mandrel out of the hardened babbitt of a pulley.

Other objects and advantages may become apparent to persons who read the following details of description in connection with the accompanying drawings in which:—

Figure 1 is a side elevation of the device assembled and ready for use.

Fig. 2 is a central vertical sectional view illustrating the device holding a pulley in which the babbitting has been completed, but prior to forcing the mandrel from the babbitt or pulley lining.

Fig. 3 is an end elevation of the device as shown in Fig. 1.

Fig. 4 is a horizontal section being taken along the line 4—4 of Fig. 1.

Fig. 5 is a perspective view of the cross bar or yoke which carries the mandrel-ejecting screw.

Referring to these drawings in detail, in which similar reference characters correspond with similar parts throughout the several views, and in which the numeral 1 represents a fragment of a table or bench on which the device is seated,—

The device comprises a base plate 2 which preferably includes a thickened middle portion 3 and lateral extensions or apertured ears 4, this plate being formed with a central opening 5. The plate 2 is further provided with fine annular grooves or circles 6 which serve as a means to aid in positioning a pulley concentrically around a mandrel 7 which is fitted in the opening 5. The lower portion of this mandrel is at least as large as its main portion, so that the mandrel may be passed longitudinally through the opening 5. The mandrel shown in the drawings has its main portion considerably smaller than the opening 5, and it should be understood that mandrels of different sizes are to be interchanged in the opening 5, so that bushings or linings of different internal diameters may be formed by this device. It should also be understood in this connection, that the aperture 5 and lower end of the mandrel may be made larger than indicated by the present drawings, and that the interchangeable mandrels may have their main portions or working surfaces of an infinite number of diameters varying from that of the screw 8 to that of the opening 5.

The two ears 4 have their apertures disposed equidistantly from the center of the opening 5 and on opposite sides thereof, and removable pivots 9 extend through these apertures, and through a pair or rods or links 10 which may have their upper ends screw threaded so as to carry nuts 11 and 12. The cross bar 13, shown separately in Fig. 5 is provided with an aperture 14 through which one of the rods 10 extends, and two of the nuts 11 and 12 are disposed on the upper and lower sides of the bar 13 so as to support the latter and removably secure it to the base plate. At the other end of the bar 13 is provided a notch 15 which engages with the other rod or link 10 between the nuts 11 and 12 of the latter, and the bar 13 is further provided with a screw threaded aperture 16 at its middle portion or between and equidistant from the centers of the aperture 14 and notch 15. The screw 8 is seated in the aperture or bearing 16 and is movable up and down for engagement with and disengagement from the mandrel 7. Therefore, when the screw 8 is disengaged from the mandrel 7 as shown in Figs. 1 and 3, the yoke and bar 13 may be swung about the link which extends through the opening 14 so that its notch 15 is disengaged from the other link 10, and a pulley may be placed around the mandrel 7 on the base plate 2.

In order that the operation and advantages of this construction may be thor-

oughly understood, a pulley is indicated at 17 on the base plate 2, babbitt 18 being shown as forming a lining in the pulley around the mandrel 7.

The operation of babbitting a pulley is as follows:

Having centered the pulley around the mandrel 7, the screw 8 is moved downward by means of its handle 19 until its centering position 20 has entered a central depression in the upper end of the mandrel and has started to raise the base plate from the bench 1, thereby indicating that the weight of the device and pulley rests upon the mandrel 7. However, Fig. 2 of the drawing shows the space between the shelf 1 and base plate 2 exaggerated for the sake of clearness; but in practice, the base plate should also touch or very nearly touch the shelf 1, and the shelf should be perfectly level so that the mandrel 7 is perfectly vertical and at right angles to the upper surface of the base plate. Having thus prepared the pulley with relation to the babbitting device, and having made sure that no leakage may occur through the lower end of the pulley, the melted babbitt is poured into the annular recess in the hub of the pulley, around the mandrel, and when this annular recess is full, the babbitt is given a sufficient time to harden. Of course, the mandrel becomes heated by the babbitt, and expands both longitudinally and laterally, while the links 10 remain cool and do not expand. Therefore, the aperture 5 must be slightly larger than the inserted end of the mandrel, so that it will not bind sufficiently to prevent the easy removal of the mandrel from the aperture 5. It is very important, therefore, that the links 10 and bar 13 shall permit the screw to be controlled by the mandrel rather than that the mandrel shall be controlled or moved laterally by the screw 8 and its supporting members, and so the nuts 11 and 12 of each rod 10 should be spaced a greater distance than the thickness of the bar 13, the recesses 14 and 15 also being of greater diameter than that of the links 10; for it should be understood that where the screw 8 has its axis fixed with relation to the base plate, (as is the case in a previously known device of this character), this screw tends to move the mandrel out of its perfectly vertical relation to the base plate, and this results in the improper babbitting of the pulley. Moreover, where the mandrel-engaging screw is carried by an arm which is engaged with only one side of the base plate (as in a previously known babbitting device, in which the mandrel is fixed to the base plate by a set screw), the longitudinal expansion of the mandrel distorts the arm which holds the mandrel-engaging screw, and this distortion of the arm deflects the mandrel laterally. Moreover, the set screw which holds the mandrel fixed to the base plate, at the same time holds it eccentric with the opening in the base plate provided that the proper difference is made between the size of the mandrel and the size of the hole in which the mandrel fits to permit expansion of the mandrel without causing it to bind in the base plate. In contradistinction to the said previously known device, the present device automatically adjusts itself upon bringing the screw 8 into engagement with the mandrel 7, and if the device is thus not perfectly adjusted, (as when an inexperienced person raises the base plate too high above the shelf 1 while babbitting a pulley which is not well balanced), the mandrel 7 has its lower end expanded by the heat from the babbitt before the babbitt hardens, in fact, before the annular recess is completely filled with melted babbitt, and this expansion within the aperture 5 causes the mandrel to fit snugly within this aperture and automatically adjusts the mandrel to its vertical position.

It will be seen, therefore, that a pulley can be quickly, easily and correctly babbitted or lined with a device of this character, and that this device cannot be made inaccurate by hard usage; and moreover, that the members 2, 7, 8, 9, 10, 11, 13 and 19 may be quickly and easily separated from one another; that is, the device may be quickly and easily "knocked down" and packed in small space for storage or transportation, together with a number of mandrels (to be interchanged with the one shown) for forming linings of different internal diameters. Moreover, it should be understood that as soon as the babbitting has sufficiently hardened, the mandrel 7 may be forced therethrough and through the base plate 2 by means of the screw 8, and in thus forcing the mandrel 7, the thrust of the screw 8 is in exact alinement with the axis of the opening 5, so that there is no uneven friction and consequent wear at different sides of the joint between the mandrel and the base plate; and therefore, this device is exceedingly durable.

Although I have described this embodiment of my invention very specifically, it is not intended to limit this invention to these exact details of construction and arrangement, but changes may be made within the scope of the inventive ideas as implied and claimed.

What I claim as my invention is:

1. In a device for babbitting pulleys, a base plate having an opening therethrough, a mandrel fitted in said opening and movable axially therethrough, a screw having its axis alinable with that of said mandrel and being operatable to move said mandrel axially, a pair of links pivotally connected to

said base plate at opposite sides of said opening, and a bar having a threaded aperture therethrough in which said screw is seated, said bar being loosely engaged with said links at opposite sides of its threaded aperture.

2. In a device for babbitting pulleys, a base plate having an opening therethrough, a mandrel fitted in said opening and movable axially therethrough, a screw having its axis alinable with that of said mandrel and being operatable to move said mandrel axially, a pair of links pivotally connected to said base plate at opposite sides of said opening, and a bar having a threaded aperture therethrough in which said screw is seated, said bar being loosely engaged with said links at opposite sides of its threaded aperture, said links being quickly and easily detachable from said base plate and bar, whereby the device may be quickly, easily and compactly collapsed as specified.

3. In a device for babbitting pulleys, a base plate having an opening therethrough, a mandrel fitted in said opening and movable axially therethrough, a screw having its axis alinable with that of said mandrel and being operatable to move said mandrel axially, a pair of links pivotally connected to said base plate at opposite sides of said opening, and a bar having a threaded aperture therethrough in which said screw is seated, said bar being loosely engaged with said links at opposite sides of its threaded aperture, said plate being provided with means to aid in positioning a pulley concentrically around said mandrel.

In testimony whereof I have hereunto set my hand.

CHRISTIAN HALVERSON.