United States Patent [19]

Martini

[11] **3,809,371**

[45] **May 7, 1974**

[54] **TENSION BAND**

[75] Inventor: **Leo J. Martini**, South Gate, Calif.

[73] Assignee: **Master Fence Fittings, Inc.**, La Habra, Calif.

[22] Filed: **June 29, 1973**

[21] Appl. No.: **375,118**

[52] **U.S. Cl.** ..... **256/47**, 24/73 B, 24/255 SL, 24/259 R

[51] **Int. Cl.** **E04h 17/04**

[58] **Field of Search** ..... 24/73 B, 73 BP, 73 FA, 24/73 SA, 73 AP, 73 PB, 73 SM, 73 TL, 81 CC, 248 E, 248 B, 248 SL, 248 CR, 248 SB, 248 L, 259 R, 259 B, 249 WL, 249 SL, 249 LL, 260, 255 SL, 251; 256/32, 34, 47; 16/86.1, 86.2

[56] **References Cited**

UNITED STATES PATENTS

2,996,285	8/1961	Johnson	256/47
2,968,470	1/1961	Pellerito et al.	256/47
2,884,214	4/1959	Wrobel	24/73 PB

FOREIGN PATENTS OR APPLICATIONS

1,022,820	3/1966	Great Britain	24/73 PB

Primary Examiner—Bobby R. Gay
Assistant Examiner—Kenneth J. Dorner
Attorney, Agent, or Firm—Fowler, Knobbe & Martens

[57] **ABSTRACT**

A tension band for retaining a chain link fabric stretcher bar to a support post for maintaining fence fabric under tension. The tension band comprises a loop portion for engaging the support post and two leg portions extending therefrom. Interlocking means are provided on the two leg portions and these interlocking means are forced into engagement by the resilient camming action of biasing means when the leg portions of the tension band are squeezed together.

12 Claims, 8 Drawing Figures

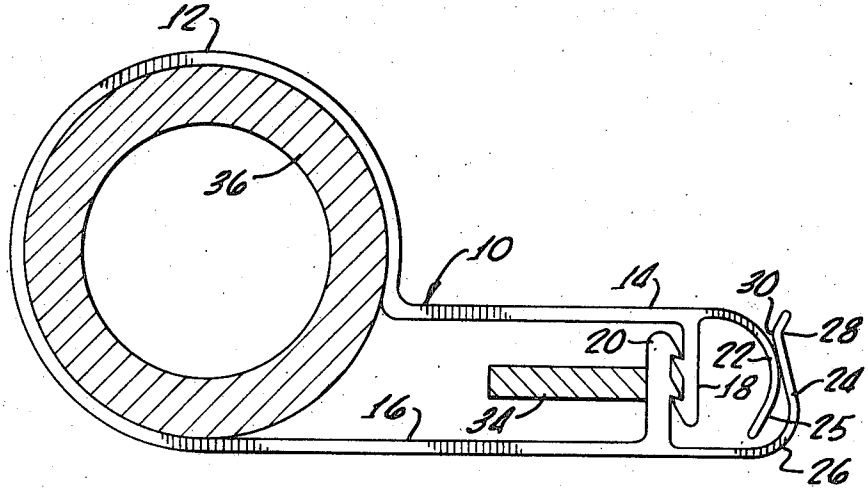

FIG. 1.

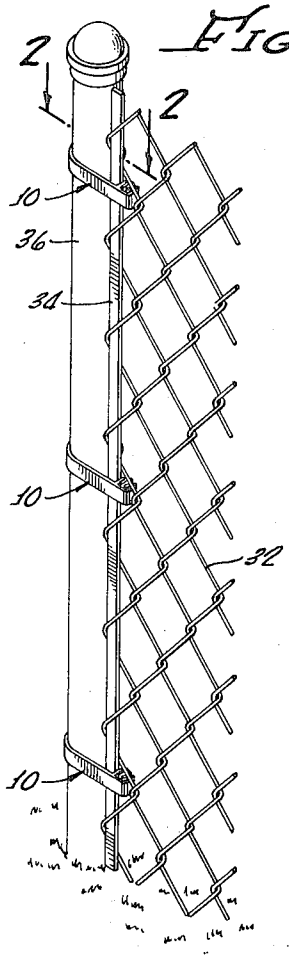

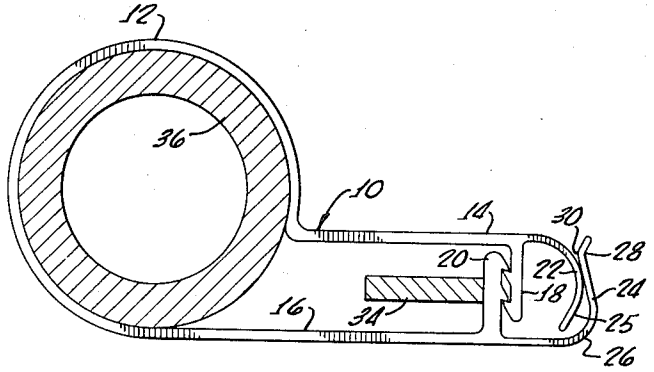

FIG. 2.

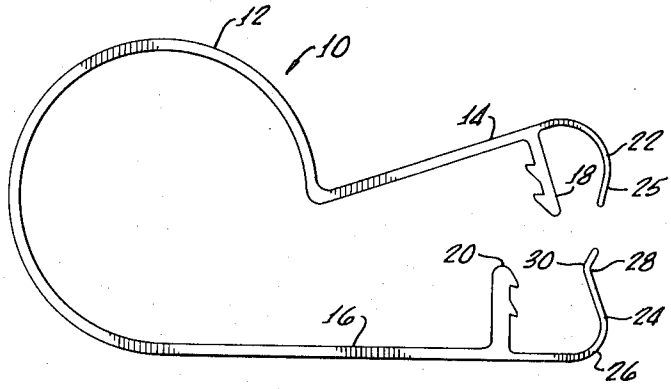

FIG. 3.

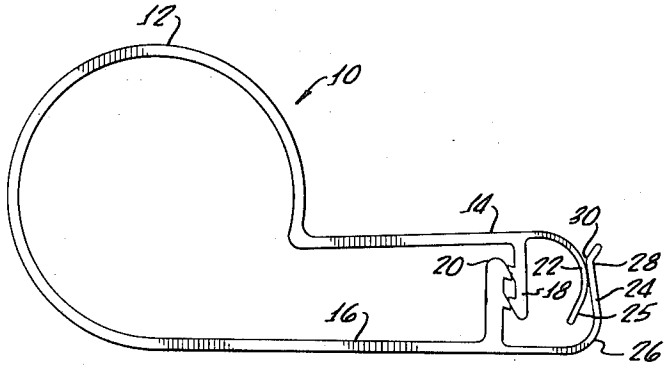

FIG. 4.

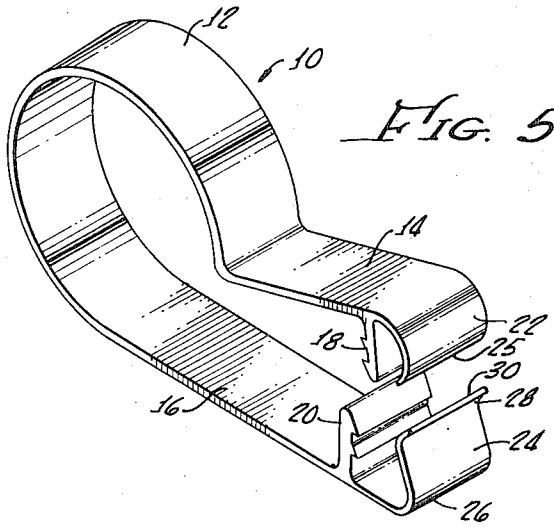

FIG. 5.

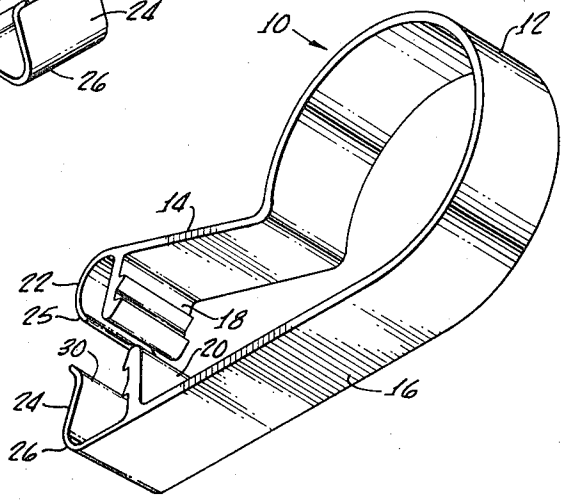

FIG. 6.

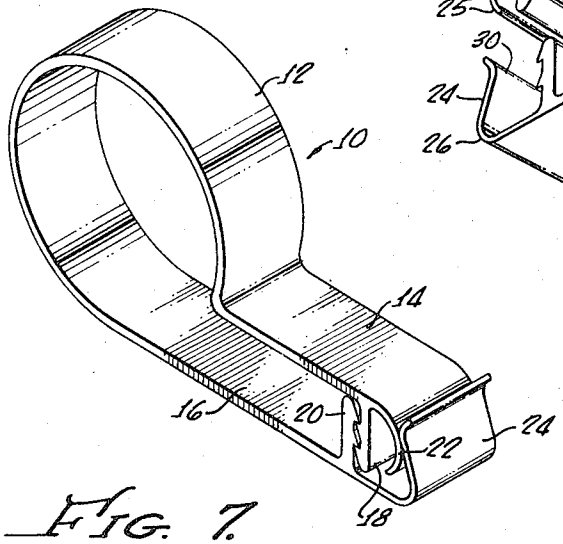

FIG. 7.

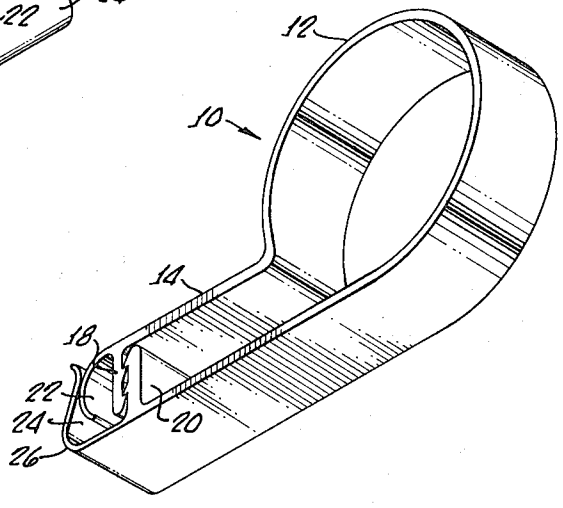

FIG. 8.

TENSION BAND

BACKGROUND OF THE INVENTION

This invention relates to fence construction and more particularly to a split tension band for attaching a stretcher bar to a fence post.

The general practice in assembling fences of the chain link or mesh fabric type is to connect the ends of the fence material to a tension bar and connect the tension bar to the fence post by means of tension bands. The band fits around the terminal or support posts and fasten to the tension bar.

Heretofore it has been common practice to provide a split band having projecting flanges through which bolts and nuts are used for tightly securing the band to the support post and for securing the tension bar to the bands. While securing means satisfactorily secure the bands to the post and the tension bar, the placing of the bolts in the projecting flanges requires additional parts and consumes considerable time and effort to assemble the bolts and nuts. Furthermore, the bolts form projections beyond the plane of the fence which are objectionable, and in some cases, dangerous.

Several devices are known in the art which attempt to surmount the above problems. One of these devices comprises a single band of metal formed in the shape of a loop with projecting legs. A T-slot is provided at the end of one of the legs for engaging a corresponding tab on the other leg. The engagement of the tab in the T-slot is maintained purely by virtue of the spring force of the band itself. That is, the tension band naturally tends to "unwind" (think of the main spring of a watch), and by so doing biases the tab into the small neck of the T-slot. A vigorous blow delivered in the right direction could easily dislodge such an interconnection. This device also amply demonstrates the problem of providing for one-hand manipulation.

Another prior art device attempts to deal with the problem of one-hand manipulation, so as to effect the elimination of bolts and nuts or other fastening devices. This device also comprises a circular loop for engaging a support post and has two legs extending from the loop. At the end of one of the legs is a flange with a slot. At the end of the other is a flange as a truncated arrowhead and having a notch behind the "point" of the arrow. To close the device the operator grasps the two legs and squeezes until the "arrowhead" passes through the notch on the other leg and the device thus locks. This device exhibits a noticeable warping out of alignment as the two legs are brought together, due to the action of the arrowhead tab. Furthermore, the engagement is maintained only by virtue of the inherent spring tension of the unitary metal band from which the device is fashioned. Thus the device exhibits a certain lack of security should a blow be delivered with enough force, at the correct angle to counteract the locking effect of the band's inherent spring tension.

The above-described devices highlight several requirements which have long remained unfilled as far as fence consumers are concerned, namely, the need for a simple structure which may be operated with one hand, which closes securely, and which will remain closed even under large disengaging forces. There is yet another consideration which is not so directly apparent from the foregoing discussion, but which nevertheless is of great importance to both fence users and suppliers. A great many of the prior art devices require significant amounts of tooling once formed, and hence are not susceptible of being fabricated solely by extrusion. A great savings in manufacturing costs is available in conjunction with a device which could indeed be extruded wholely-formed.

Several other advantages accrue specifically from the novel structure herein set forth. In accordance with the present invention, a stretcher bar, held under tension by a tension band, bears against one of the toothed projections of the interlocking means. Whereas some prior art devices would support the entire load at one joint, the interlocking means distribute the loading force over two joints, namely those between the projections and their respective legs. In addition to distributing the load forces in a desirable manner, the interlocking means are so designed as to engage with a firmness proportional to the locking force (i.e., fence tension). Thus, the toothed projections tighten their grips on each other when fence tension is increased. Many prior art devices, on the other hand, tend to deform in the direction most likely to cause failure.

SUMMARY OF THE INVENTION

The present invention pertains to the area of fittings for chain like fences, or more particularly to the area of tension band fastening devices for retaining a tension or stretcher bar in proximity to a supporting post under tension from the chain link fabric.

The present tension band is comprises of a single unitary piece of spring metal formed in the shape of a loop having two roughly parallel leg portions extending from the loop portion. Interlocking means are provided on each of the legs in the form of mutually engaging toothed projections. Also on the legs are biasing means in the form of camming flanges, one on each leg. The interlocking means are brought into engagement when an operator squeezes the two legs of the device together. This causes a resilient camming action by the aforementioned flanges which, when the legs are squeezed together, causes a translation of the legs relative to one another, thus causing the teeth of the respective projections to engage each other in a particularly firm and secure manner.

With the above physical attributes in mind it may now be seen how the present device surmounts the difficulties encountered in attempting to use prior art devices of a similar nature. First, the device is of unitary construction and is simple to use in that closure merely requires a squeezing action with only one hand. Nor are there any projections to catch clothing or injure livestock, because of the single-piece self-locking construction. Second, the present tension band is doubly secure in comparison with prior tension bands. Whereas the prior bands have locking devices of some sort, for instance a tab and T-slot interconnection, these devices nevertheless rely for their fastening effect almost entirely on the inherent springiness of the metal band from which the apparatus is fashioned. The locking force derives from the tendency of the circular portion to pull the legs apart from their enforced parallel position to a flared position as when the device is at rest (before squeezing).

The present tension band, however, utilizes a double-locking structure whereby a snap lock of the biasing means is coupled with the resiliently-urged tooth engagement of the interlocking means. That is to say, the

mere locking of the teeth of the interconnecting means provides one "lock" under the urging of the biasing means. A second "lock" is provided by the manner in which the curved camming surface of one leg is retained by the complimentarily curved camming surface of the other leg by a snap-fit. Third, the present device may be extruded wholely formed so that no further die-stamping or bending or punching is necessary. The time and labor saving potential is obvious.

DESCRIPTION OF THE DRAWINGS

These and many other advantages of the present invention may be apprehended by taking reference to the following drawings, in which:

FIG. **1** is a perspective view of several of the tension bands of the present invention in operational assembly with a fence structure;

FIG. **2** is a cross-sectional view taken on the line **2—2** of FIG. **1**;

FIG. **3** is an elevation of the preferred embodiment of the present invention;

FIG. **4** is an elevation detailing the interlocking means and the biasing means;

FIG. **5** is a perspective view of the preferred embodiment of the present invention in disengaged position;

FIG. **6** is a perspective view of the preferred embodiment, also in disengaged position, from a different angle;

FIG. **7** is a perspective view of the preferred embodiment of an interlocking or closed position; and

FIG. **8** is a perspective view from a different angle of the preferred embodiment in locked position.

DETAILED DESCRIPTION OF THE PREFERRED EMBODIMENT

Referring first primarily to FIG. **3**, there is shown the preferred embodiment of the present invention, indicated generally by reference numeral **10.** The tension band **10** is formed from a single unitary piece of spring metal into a loop portion **12** from which extend first and second leg portions **14** and **16,** respectively. Connected to the first and second leg portions are first and second interlocking means, respectively, which in the preferred embodiment comprise toothed projections **18** and **20,** both of which project toward each other from the respective legs and both of which are disposed essentially perpendicularly to the respective leg portions. Also shown clearly in FIG. **3** are the biasing means which in the preferred embodiment comprise first and second biasing members **22** and **24.** The first biasing member **22** is shown as a flange, curved downward toward the second leg portion so as to present a convex camming surface when viewed from the right (as seen in FIG. **3**). It is provided with a camming surface **25.**

The second biasing member **24** is curved essentially toward the first leg portion **14.** More particularly, however, the biasing member **24,** comprises a first portion **26** which is connected directly to the second leg portion **16.** The first portion **26** presents, as does the biasing member **22,** a convex surface when viewed from the right (FIG. **3**). Connected to the first portion **26** is a second portion **28** which is reverse-curved relative to the first portion **26** so as to present a convex camming surface complimentary to that of the camming surface **25.** The second biasing member has a camming surface on the second portion **28,** indicated by numeral **30.**

Each of the biasing members **22** and **24** is substantially thinner in cross-section than are the interlocking means **18** and **20,** so that the biasing members **22** and **24** are slightly resilient, permitting them, under the action of camming surfaces **25** and **30,** to slide past one another. In the preferred embodiment, as shown, the entire tension band **10** including the interlocking means and the biasing means is formed from a single piece of extruded spring metal. However other constructions are possible.

The operation of the tension band **10** will now be described, chiefly in relation to FIGS. **2, 3** and **4.** First, however it should be understood precisely how the tension band **10** is to be used in relation to a fence. Thus, shown at FIG. **1** is a portion of chain link fence fabric **32** through the end of which is threaded a stretcher or tension bar **34.** Shown also is a fence supporting post **36** about which are three tension bands **10** which are retaining the chain link fabric stretcher bar **34** to the support post **36** under tension. Normally the fence tension is obtained by stretching the chain link fabric after it has been secured at one end. A block and tackle is commonly used to pull on the stretcher bar. When the stretcher bar is in the correct relationship with the support post **36,** the tension bands **10** are slid down over the top of the post and snapped on, encircling both the support post **36** and the tension bar **34,** as may be seen clearly in FIG. **2.** The stretcher bar **34** then bears against the interlocking means.

Various stages in the closure of the tension band **10** may be seen in FIGS. **2, 3,** and **4.** FIG. **3** shows the tension band **10** completely open, with the leg portions **14** and **16** in a slightly flaring position relative to each other. FIG. **4** shows the camming action of the biasing means quite clearly. The leg portions **14** and **16** of the tension band **10** are in the process of being brought together, as by squeezing the hand, and the camming surface **25** of the first biasing member **22** is beginning to slide on the camming surface **30** of the second biasing member **24.** This causes the first leg portion **14** to translate substantially parallel to the longitudinal axis of the second leg portion **16** so as to bring the interlocking means **18** and **20** into engagement.

FIG. **2** shows the engaged and locked position of the interlocking means and also the interlocked position of the biasing means. The camming surface **25** of the first biasing member has, in passing over the camming surface **30** of the second biasing member **28** allowed the second portion **28** of the second biasing member **24** to snap over the convex camming surface of the first biasing member **22.** Thus the interconnection of the two leg portions is doubly secure. First the interlocking means **18** and **20** are held securely in engagement by the continued pressure of the second biasing member **24** of the second leg portion **16** against the first biasing member **22** of the first leg portion **14.** Also, the resilience of the second biasing member **24** over the end of the first biasing member **22** provides a snap-type locking means which tends to hold the two leg portions **14** and **16** in close-spaced parallel relationship. Thus it may be seen that once the support post **36** is encircled by the circular loop portion **12** the attachment of the tension band **10** of the present invention requires only that an operator squeeze with one hand the two leg portions **14** and **16** together so as to cause the above-described interlocking actions. The operator's other hand may then remain free for other functions.

FIGS. 5 and 6 clearly illustrate the previously described construction when the tension band 10 is in its open configuration. Similarly, FIGS. 7 and 8 illustrate the construction details and the interlocking engagement of the biasing members 22 and 24 and the interlocking means 18 and 20 when the tension band 10 is in a closed configuration.

It should be noted, particularly in reference to FIG. 2, that the first interlocking means 18, in addition to locking with the second interlocking means 20, serves to strengthen the second interlocking member 20. Thus, as the stretcher bar 34 pulls away from the support post 36, the second interlocking means 20 would tend to bend or break off from the second leg portion 16. However, the base of the interlocking member 18 sears against the free end of the interlocking member 20 to prohibit such bending or breaking, making the entire construction very reliable.

What is claimed is:

1. A tension band for retaining a chain link fabric stretcher bar to a support post for maintaining fence fabric under tension, comprising:

a. a unitary strip of spring metal, which further comprises a loop portion for engaging a support post, and first and second leg portions extending from said loop portion, said leg portions spaced apart from each other and disposed so as to permit motion from said spaced apart position to a close-spaced position;

b. first and second interlocking means disposed on said first and second leg portions, respectively, for locking said first and second leg portions in said close spaced position so as to retain said stretcher bar; and

c. biasing means for resiliently urging said first and second interlocking means into engagement when said first and second leg portions are brought into said close-spaced position, comprising:

1. a first biasing member on said first leg portion, said first biasing member having a camming surface thereon;

2. a second biasing member on said second leg portion, one of said first and second biasing members being slightly resilient, and said second biasing member having a camming surface disposed to bear on said camming surface of said first biasing member so as to resiliently urge said interlocking means into engagement.

2. The tension band as defined in claim 1, in which:

a. said first biasing member comprises a flange on said first leg portion directed generally toward said second leg portion, and having a convex surface with a camming surface thereon; and

b. said second biasing member comprises a flange on said second leg portion directed generally toward said first leg portion, and having a concave portion suitable to engage said convex surface of said first flange and a convex surface for camming on said camming surface of said first flange.

3. The tension band as defined in claim 2, in which engagement of said camming surfaces longitudinally translates said first and second leg portions relative to one another, and in which said first and second interlocking means engage in response to said translation.

4. The tension band as defined in claim 3, in which said first and second interlocking means comprise respective projections normal to the surfaces of said first and second leg portions, respectively, said projections directed generally toward each other and having teeth disposed to mutually engage.

5. The tension band as defined in claim 1, in which said first and second biasing members comprise first and second flanges, said second flange being disposed so as to resiliently snap over said first flange when said first and second leg portions are brought into said closed-spaced position, so as to provide a second mode of locking said leg portion in said close-spaced position.

6. A tension band for retaining a chain link fabric stretcher bar to a support post for maintaining fence fabric under tension, comprising:

a. a unitary strip of spring metal, which further comprises a loop portion for engaging a support post, and first and second leg portions extending from said loop portion, said leg portions spaced apart from each other and disposed so as to permit motion from said spaced apart position to a close-spaced position;

b. first and second interlocking means disposed on said first and second leg portions, respectively, for locking said first and second leg portions in said close-spaced position so as to retain said stretcher bar, said first and second interlocking means requiring a relative translation in a direction parallel to the longitudinal axis of said second leg portion in order to effect engagement and locking;

c. a first biasing member on said first leg portion; and

d. a second biasing member on said second leg portion, said second biasing member being disposed to interact with said first biasing member so as to cause said first leg portion to translate along an axis parallel to said second leg portion thus to effect a relative translation of said first and second interlocking means so as to engage said interlocking means.

7. The tension band as defined in claim 6, in which:

a. said first biasing member comprises a flange on said first leg portion directed generally toward said second leg portion, and having a convex surface with a camming surface thereon; and

b. said second biasing member comprises a flange on said second leg portion directed generally toward said first leg portion, and having a concave portion suitable to engage said convex surface of said first flange and a convex surface for camming on said camming surface of said first flange.

8. The tension band as defined in claim 7, in which engagement of said camming surfaces longitudinally translates said first and second leg portion relative to one another.

9. The tension band as defined in claim 8, in which said first and second interlocking means comprise respective projections normal to the surfaces of said first and second leg portions, respectively, said projections directed generally toward each other and having teeth disposed to mutually engage.

10. A tension band for retaining a chain link fabric stretcher bar to a support post for maintaining fence fabric under tension, comprising:

a. a unitary strip of spring metal, which further comprises a circular loop portion for engaging a sup-

port post, and first and second leg portions extending from said circular loop portion, said first leg portion extending substantially radially and said second leg portion extending substantially tangentially from said circular loop portion, said leg portions spaced from each other and disposed in a slightly flaring position, said leg portions disposed so as to permit motion from said flared position to a close-spaced position;

b. first and second interlocking means disposed on said first and second leg portions, respectively, said first and second interlocking means comprising respective toothed projections normal to the surfaces of said first and second leg portions, said first and second interlocking means projecting toward one another, and having teeth disposed to mutually engage and to lock said first and second leg portions into close-spaced relationship when engaged;

c. biasing means disposed on said first and second leg portions, respectively, for biasing said first and second interlocking means into engagement when said first and second leg portions are brought into close-spaced relation, which further comprises a first flange on said first leg portion curved generally toward said second leg portion, and having a concave and a convex surface with a camming surface on the convex surface thereof, and a second flange on said second leg portion, at least one of said first and second flanges being resilient, said second flange curved generally toward said first leg portion and having a first concave portion suitable to engage said camming surface of said first flange and a second portion of opposite curvature so as to provide a camming surface suitable to cam on said camming surface of said first flange, so as to resiliently urge said first interlocking means in a direction parallel to said second leg portion and thereby into engagement with said second interlocking means, when said first and second leg portions are moved into close-spaced relationship.

11. A tension band for retaining a chain link fabric stretcher bar to a support post for maintaining fence fabric under tension, comprising:

a. a unitary strip of spring metal, which further comprises a loop portion for engaging a support post, and first and second leg portions extending from said circular loop portion, said leg portions spaced from each other and disposed in a slightly flaring position, said leg portions disposed so as to permit motion from said flared position to a close-spaced position;

b. first and second interlocking means disposed on said first and second leg portions, respectively, said first and second interlocking means comprising respective toothed projections normal to the surfaces of said first and second leg portions, said first and second interlocking means projecting toward one another, and having teeth disposed to mutually engage and to lock said first and second leg portions into close-spaced relationship when engaged:

c. biasing means disposed on said second leg portion, said biasing means defining along with said second interlocking means a channel transverse to said second leg portion capable of deforming slightly to accommodate said first interlocking means in such a manner as to press firmly into engagement said first and second interlocking means.

12. A tension band for retaining a chain link fabric stretcher bar to a support post for maintaining fence fabric under tension, comprising:

a. a unitary strip of spring metal, which further comprises a loop portion for engaging a support post, and first and second leg portions extending from said circular loop portion, said leg portions spaced from each other and disposed in a slightly flaring position, said leg portions disposed so as to permit motion from said flared position to a close-spaced position;

b. first interlocking means disposed on said first leg portion, said first interlocking means comprising a toothed projection normal to the surface of said first leg portion, said first interlocking means directed toward said second leg portion, and said first interlocking means being capable of diminishing slightly in dimension in a direction parallel to said first leg portion;

c. second interlocking means disposed on said second leg portion, said second leg portion comprising a projection normal to the surface of said second leg portion, said second interlocking means directed toward said first leg portion, and having teeth suitable for engagement with those of said first interlocking means; and

d. biasing means disposed on said second leg portion, said biasing means defining along with said second interlocking means a channel transverse to said second leg portion, which channel is rigid in a direction parallel to said second leg portion, and which channel is of such size as to accommodate said first interlocking means if said first interlocking means deforms slightly to diminish in size, said accommodation pressing firmly into engagement said first and second interlocking means.

* * * * *