March 30, 1965 E. C. POLLAK ETAL 3,176,093

CLOSURE OPERATED SWITCH ACTUATOR HAVING SAG COMPENSATION

Filed July 2, 1963

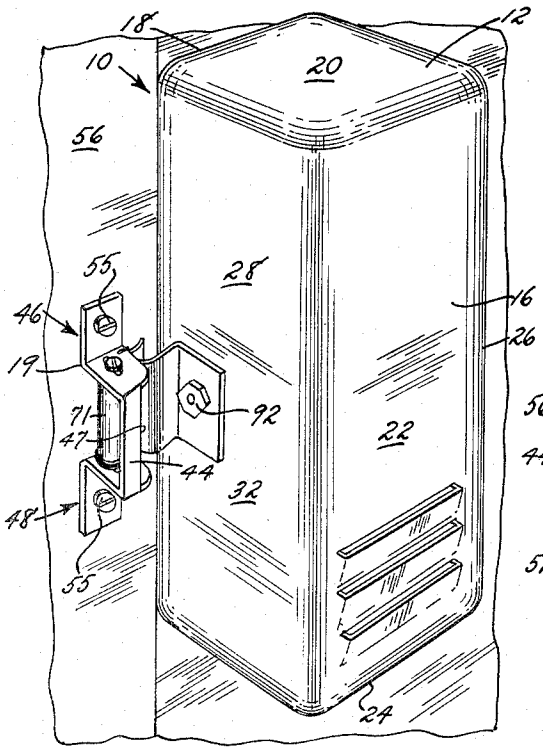

Fig.1

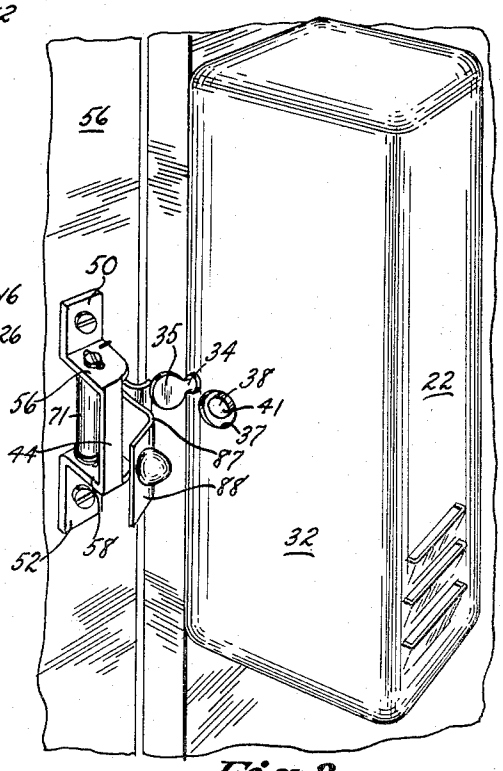

Fig.2

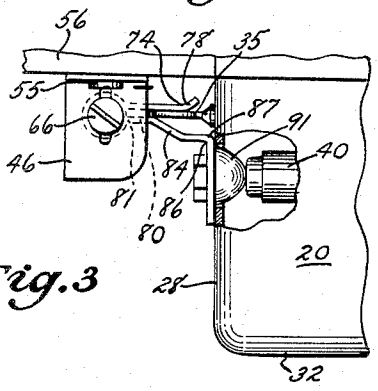

Fig.3

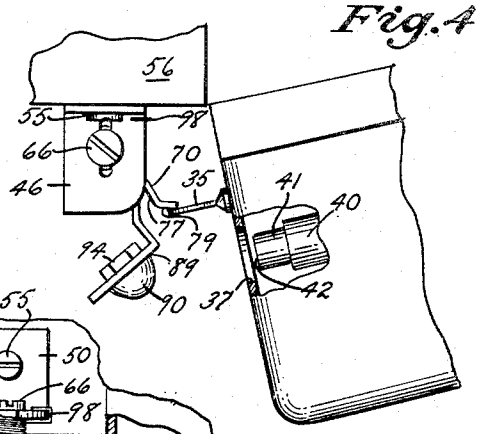

Fig.4

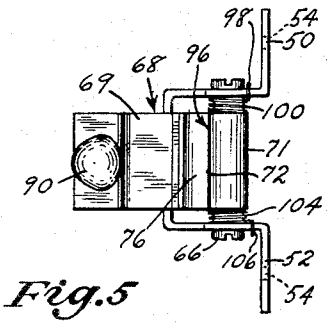

Fig.5

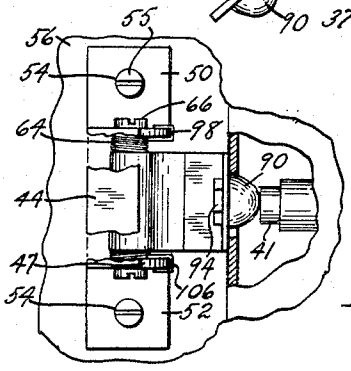

Fig.6

United States Patent Office

3,176,093

Patented Mar. 30, 1965

1

3,176,093

CLOSURE OPERATED SWITCH ACTUATOR HAVING SAG COMPENSATION

Edward C. Pollak, 21 Thimble Lane, Hicksville, N.Y.; Bennett B. Harman, 80—05 Grand Central Parkway, Jamaica, N.Y.; and William Solomon, 46 Croley St., Huntington, N.Y.

Filed July 2, 1963, Ser. No. 292,785
4 Claims. (Cl. 200—61.62)

This invention relates to a door alarm actuator, and more particularly to an improved construction which will allow actuation of a door alarm mounted upon a door when the door is opened in an inwardly direction.

Door alarm constructions are normally maintained in passive condition after installation and actuation by contact with a fixed projection mounted upon the door jamb, loss of contact with the same upon the opening of the door resulting in the closing of a switch which causes the alarm to sound when the alarm housing is mounted at or near the hinge of the door. With an outwardly opening door, this arrangement is readily accomplished. In the present case, however, the door opening inwardly, the alarm must be mounted at a substantial distance from the pivotal axis of the door.

Even when feasible solutions to the above-mentioned problem have been found, some time after installation another serious problem often arises. With the passage of time, the door upon which the alarm box is secured tends to sag off its original plumb throwing the coacting components of the alarm system out of line, with resulting non-functioning of the alarm as desired. Accordingly, it is among the objects of the present invention to provide a door alarm actuator in which the above-mentioned difficulties have been substantially eliminated.

Another object of the present invention is to provide a door alarm actuator of the class described which may, in itself, be fabricated from few parts, and yet accomplish the desired results.

Another object of the present invention is to provide a door alarm actuator as described whose structure is capable of being adapted to compensate for shifting positions of the door from its original plumb.

A further object herein lies in the provision of a door alarm actuator which requires non-mechanical, simple alterations to the proximal wall of the housing of the door alarm circuit.

Yet another object of the present invention is to provide a door alarm actuator which may cooperate with the attendant apparatus on the alarm system housing in a simplified manner.

A still further object of the present invention is to provide door alarm construction of the class described which may be manufactured at relatively low cost in large scale production, and yet may prove reliable and durable in use.

These objects, as well as other incidental ends and advantages, will more fully appear in the progress of the following disclosure, and be pointed out in the appended claims.

In the drawing, to which reference will be made in the specification, similar reference characters have been employed to designate corresponding parts throughout the several views.

FIGURE 1 is a fragmentary front perspective view of the door alarm actuator embodying the invention, engaged in circuit-breaking position with the door alarm system.

FIGURE 2 is a similar front perspective view, but showing the door alarm actuator disengaged from the alarm box so that the alarm circuit is closed.

FIGURE 3 is a top plan fragmentary view of the door

2

alarm actuator and alarm housing, partially broken away, showing the actuator in circuit-breaking position.

FIGURE 4 is a top plan view similar to FIGURE 3, except that the actuator is shown disengaged from the alarm box housing, thus completing the alarm circuit.

FIGURE 5 is a side elevational view of the door alarm actuator element.

FIGURE 6 is an enlarged fragmentary side elevational view of the door alarm actuator element and door alarm housing and circuit, partially broken away in section.

A preferred embodiment of the invention includes a door alarm box comprising a housing and having a door alarm circuit placed therein. The door alarm box is secured to a door at an edge displaced from the hinge axis, by any convenient means. Located within the side wall of the housing nearest the door frame molding and near the surface of the door, are a trip finger and opening, exposing the interior of the alarm box. Aligned with the opening is a microswitch which forms part of the door alarm circuit. Mounted on the door frame molding, or in analogous position thereto, is a door alarm actuator which is pivotally mounted within a fixed support, and is spring biased away from the alarm box. The main actuator member comprises a tubular section which is mounted for pivotal movement on a stationary shaft attached to the support, from which extends a finger contact and a microswitch actuator member. When the door is closed, the trip finger contacts the trip finger contact and causes the actuator member to pivot towards the box. Mounted near the edge of the microswitch actuator member is a projection which upon further pivoting of the actuating member passes to the opening in the side wall of the box and depresses the switch, thus opening the alarm circuit. A steel strip forming the pivotal portion of the actautor member is of less width than the shaft upon which it is mounted, the difference being filled by spring biasing means. Accordingly, if the door were to shift position with respect to its hinges, thus causing a change of location of the opening through which the projection on the microswitch actuating member passes, the existing play between the strip and the portion of the shaft filled by the spring member allows the strip to reposition itself along a vertical axis so that the outer surface of the projection upon striking the edge of the opening will be cammed into interengagement with the microswitch.

In accordance with a preferred embodiment of the invention, the door alarm system, generally indicated by reference character **10**, comprises broadly an alarm box **12** and an actuator unit **14**.

More particularly, the alarm box comprises a housing element **16** including a rear wall **18**, a top wall **20**, a front wall **22**, a bottom wall **24**, a right side wall **26**, and a left side wall **28**. The rear wall **18** abuts a surface of the door **30**, and the housing **16** may be secured to the door by any convenient means, such as screws (not shown). The front wall **22** has louvers **23** behind which is placed a horn speaker (not shown) in well-known manner, thus allowing the sound waves to pass easily to the interior of the housing to the surrounding atmosphere, the details of which form no part of the present disclosure.

A lower portion **32** of the side wall **28** has positioned thereon a trip finger **34**. The trip finger is located near the rear wall **18** and the edge **31** of the door **30**. Said finger has a rear surface **35** and a front surface **36**, and in front thereof is an opening defined by an edge **37**.

Part of the alarm circuitry consists of a reciprocating microswitch element **40** having a plunger portion **41** with a contact surface **42**, the microswitch being aligned so as to be directly aligned with the opening **38** for a purpose more fully appearing.

Mounted upon the door frame **29**, so as to be within

operative distance of the trip finger 34 and opening 38, is the actuator unit 14. The actuator unit consists of a bracket mount 43, a formed steel strip 68, and a spring 96.

The bracket mounting 43 comprises a central portion 44 having a front edge 47. Depending from said central portion 44 are symmetrical angle bracket members 46 and 48. The width of said angle bracket members is greater than that of said central portion, as seen in FIGURE 6. Said angle bracket members comprise feet 50 and 52 with holes 54 through which screws 55 may pass for mounting said bracket mount 43 in secured position on a wall or door jamb molding 56. Securing said feet 50 and 52 and said central portion 44 are arms 58 and 60. Located in said arms, in perpendicular relation to feet 50 and 52, are slots 62 and 63. Shaft 64 is positioned between said slots by means of screws 66, and consequently shaft 64 may be adjusted for horizontal positioning.

Pivotally mounted upon shaft 64 is a formed steel strip member 68, which comprises switch actuator member 69 and trip finger contact 70.

The strip member 68 includes a tubular portion 71 which engages said shaft for pivotal motion therearound. Said strip member is of lesser width than the width of said shaft member, and therefore less than the distance between arms 58 and 60. Extending from the tubular portion 71 at a fold 72 is a straight portion 76, from which a flared lip 78 extends at fold 74, said lip having an inner contact surface 79 while said strip portion has a contact surface 77.

Depending from the other side of the tubular portion 71 at fold 81 is a rectilinear portion 82. Depending from the portion 80 at a fold portion 83 is an elbow section 82′ comprising a first elbow portion 84 and a second elbow portion 86. Extending from the second elbow portion 86 at a fold 87 is an arm 88. Said arm has a hole 89 through which is passed a projection 90 having a bolt 92 secured thereto, adapted for mating engagement with a nut 94, thus securing said projection to the arm 88. The projection 90 includes a cam surface 91.

The strip member 68 is biased on the shaft 64 by means of the spring 96. The spring 96 comprises a first anchor portion 98 positioned on arm 58. A first coiled portion 100 is wound about shaft 64 in a given direction, occupying the space between the outer edges of strip member 68 and arm 60, a rectilinear portion 102 passing along fold portion 72, a second coiled portion 104 being wound around shaft 64 in an opposite direction and disposed in between the outer edges of strip arm 58, and a second anchor portion 106 contacting the arm 58. The spring biases the strip member away from engagement with the alarm box housing, and the portions 100 and 104 allow the strip member to position itself vertically along shaft 64 to allow for the shifting of the door from its original pivotal position (compare FIGURES 5 and 6).

The alarm circuit may be so designed as to be in a closed condition when switch element 40 is in extended position. To position the door alarm system for security purposes, the circuit is placed in a closed position, and then the door is moved to a closed position.

As the door reaches a point where it is almost closed, the rear surface 35 of trip finger 34 contacts the surface 79 of the flared lip 78, thus causing strip member 68 to move in a counterclockwise direction, as seen from FIGURE 4. Further movement of the door towards its closed position will continue rotation of the strip member and consequently bring the projection 90 into alignment to pass through opening 38, whereby surface 91 of projection 90 will contact the surface 42 of the plunger portion 41 of switch 40. Continued closing movement will cause the depression of plunger portion 41, hence opening the alarm circuit. At this point, any one who opens the door from either side thereof will cause the reversal of the previously described operation, actuating the alarm.

It will thus be seen that this invention provides a simple yet completely satisfactory solution to the problem of providing a reliable, durable, inexpensive door alarm operating system for inwardly opening door in which the alarm is mounted on the latched edge as contrasted with the hinged edge of the door. Furthermore, since the shaft is adjustable horizontally, and the spring allows vertical positioning of the trip member during the closing of the door, it is possible to continue using this door alarm, even though the door itself may move out of plumb alignment, without further adjustment.

Having illustrated and described the invention, it is to be understood that it is capable of variation and modification, and we therefore do not wish to be limited to the precise details set forth in this specification, but desire to avail ourselves of such changes and alterations as fall within the scope of the following claims.

We claim:

1. Closure operative electrical switch construction comprising: an actuator unit including a relatively fixed bracket mount, a shaft supported by said bracket, a switch actuator member pivotally mounted upon said shaft, and capable of limited movement along the axis of said shaft, said switch actuator member including a trip finger portion, and a switch actuator member including a projection having a cam surface thereon; a housing element mounted for movement relative to said actuator unit and including a trip finger lying in the path of motion of said trip finger portion of said actuator unit and selectively contacting the same to impart arcuate motion to said projection on said switch actuator member; there being an opening in said housing, switch means mounted within said housing and located opposite said opening to be selectively actuated by the entry of said projection therethrough; whereby misalignment of said projection and said opening upon movement of said housing with respect to said actuator unit is corrected upon the contacting of said cam surface with a portion of the periphery of said opening to result in axial displacement of said actuator unit along said shaft.

2. Closure operative electrical switch construction comprising: an actuator unit including a relatively fixed bracket mount, a shaft supported by said bracket, a switch actuator member pivotally mounted upon said shaft, and capable of limited movement along the axis of said shaft, said switch actuator member including a trip finger portion, and a switch actuator member including a projection having a cam surface thereon; a housing element mounted for movement relative to said actuator unit and including a trip finger lying in the path of motion of said trip finger portion of said actuator unit and selectively contacting the same to impart arcuate motion to said projection on said switch actuator member; there being an opening in said housing, switch means mounted within said housing and located opposite said opening to be selectively actuated by the entry of said projection therethrough; and resilient means approximately centering said actuator member along said shaft; whereby misalignment of said projection and said opening upon movement of said housing with respect to said actuator unit is corrected upon the contacting of said cam surface with a portion of the periphery of said opening to result in axial displacement of said actuator unit along said shaft.

3. Closure operative electrical switch construction comprising: an actuator unit including a relatively fixed bracket mount, a shaft supported by said bracket, a switch actuator member pivotally mounted upon said shaft, and capable of limited movement along the axis of said shaft, said switch actuator member including a trip finger portion, and a switch actuator member including a projection having a cam surface thereon; a housing element mounted for movement relative to said actuator unit and including a trip finger lying in the path of motion of said trip finger portion of said actuator unit and selectively contacting the same to impart arcuate motion to said projection on said switch actuator member; there being

an opening in said housing, switch means mounted within said housing and located opposite said opening to be selectively actuated by the entry of said projection therethrough; and resilient means approximately centering said actuator member along said shaft; whereby misalignment of said projection and said opening upon movement of said housing with respect to said actuator unit is corrected upon the contacting of said cam surface with a portion of the periphery of said opening to result in axial displacement of said actuator unit along said shaft; said resilient means also biasing said projection away from said housing.

4. Closure operative electrical switch construction comprising: an actuator unit including a relatively fixed bracket mount, a shaft supported by said bracket, a switch actuator member pivotally mounted upon said shaft, and capable of limited movement along the axis of said shaft, said switch actuator member including a trip finger portion, and a switch actuator member including a projection having a cam surface thereon; a housing element mounted for movement relative to said actuator unit and including a trip finger lying in the path of motion of said trip finger portion of said actuator unit and selectively contacting the same to impart arcuate motion to said projection on said switch actuator member; there being an opening in said housing, switch means mounted within said housing and located opposite said opening to be selectively actuated by the entry of said projection therethrough; and resilient means approximately centering said actuator member along said shaft; whereby misalignment of said projection and said opening upon movement of said housing with respect to said actuator unit is corrected upon the contacting of said cam surface with a portion of the periphery of said opening to result in axial displacement of said actuator unit along said shaft; said resilient means also biasing said projection away from said housing; and means for adjusting said shaft perpendicularly to its own axis with respect to said bracket.

References Cited by the Examiner

UNITED STATES PATENTS

676,744	6/01	Gatten	200—61.81
1,662,661	3/28	Coates	200—61.7
2,053,373	9/36	Money	200—61.81
2,521,005	9/50	Gundlach	200—61.76

NEIL C. READ, *Primary Examiner.*