United States Patent [19]

McCoy et al.

[11] **3,719,817**

[45] **March 6, 1973**

[54] **METHOD OF GENERATING A DISPLAY RASTER**

[75] Inventors: **Reginald F. H. McCoy**, Highland Park, Ill.; **Brian J. Woycechowsky**, Binghamton, N.Y.

[73] Assignee: **The Singer Company**, New York, N.Y.

[22] Filed: **April 1, 1971**

[21] Appl. No.: **130,217**

[52] **U.S. Cl.** .....**235/186,** 235/198, 315/24, 340/324 A

[51] **Int. Cl.** **G06g 7/22,** H01j 29/70

[58] **Field of Search** .....235/197, 186, 189, 181 PL, 235/198; 178/6.8, 6, DIG. 20; 340/324 A; 315/18, 19, 21 R, 23, 24

[56] **References Cited**

UNITED STATES PATENTS

3,501,669	3/1970	Henderson	315/24
3,476,974	11/1969	Turnage, Jr. et al.	315/23
3,044,058	7/1962	Harris	235/198 UX
3,394,367	7/1968	Dye	315/18 X
3,422,305	1/1969	Infante	315/24
3,422,306	1/1969	Gray	315/24 X

Primary Examiner—Joseph F. Ruggiero

Attorney—Francis L. Masselle, William Grobman and Charles S. McGuire

[57] **ABSTRACT**

A method of producing a scan on a CRT which will follow a predefined path, as viewed by an observer, by generating two voltages to drive the scanning spot with two polynomials (which are functions of two variables describing the desired spot position as a function of time) representing the path, the coefficients of said polynomials being found by obtaining known values of the voltages and variables for an array of points on the CRT and performing a numerical analysis on said array.

9 Claims, 3 Drawing Figures

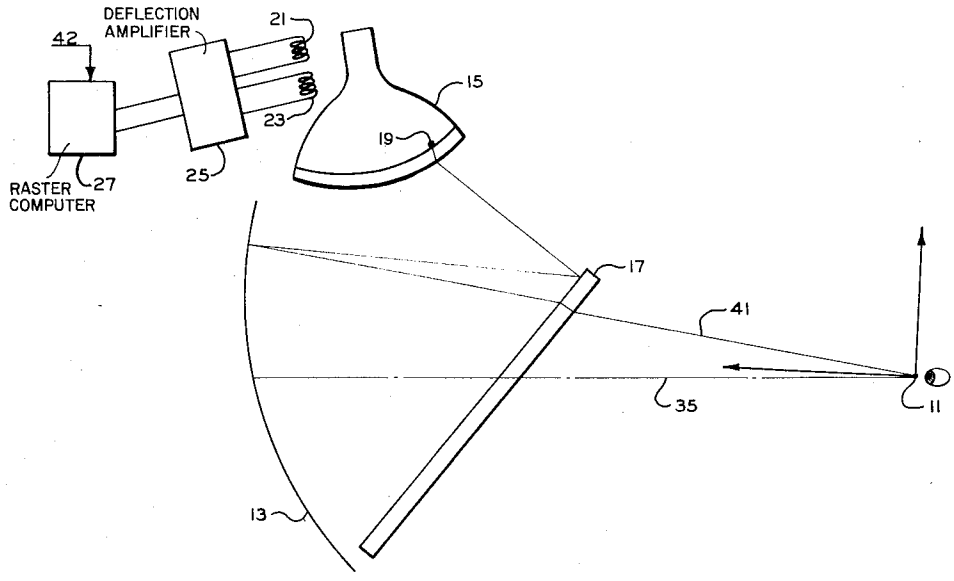

FIG. 1

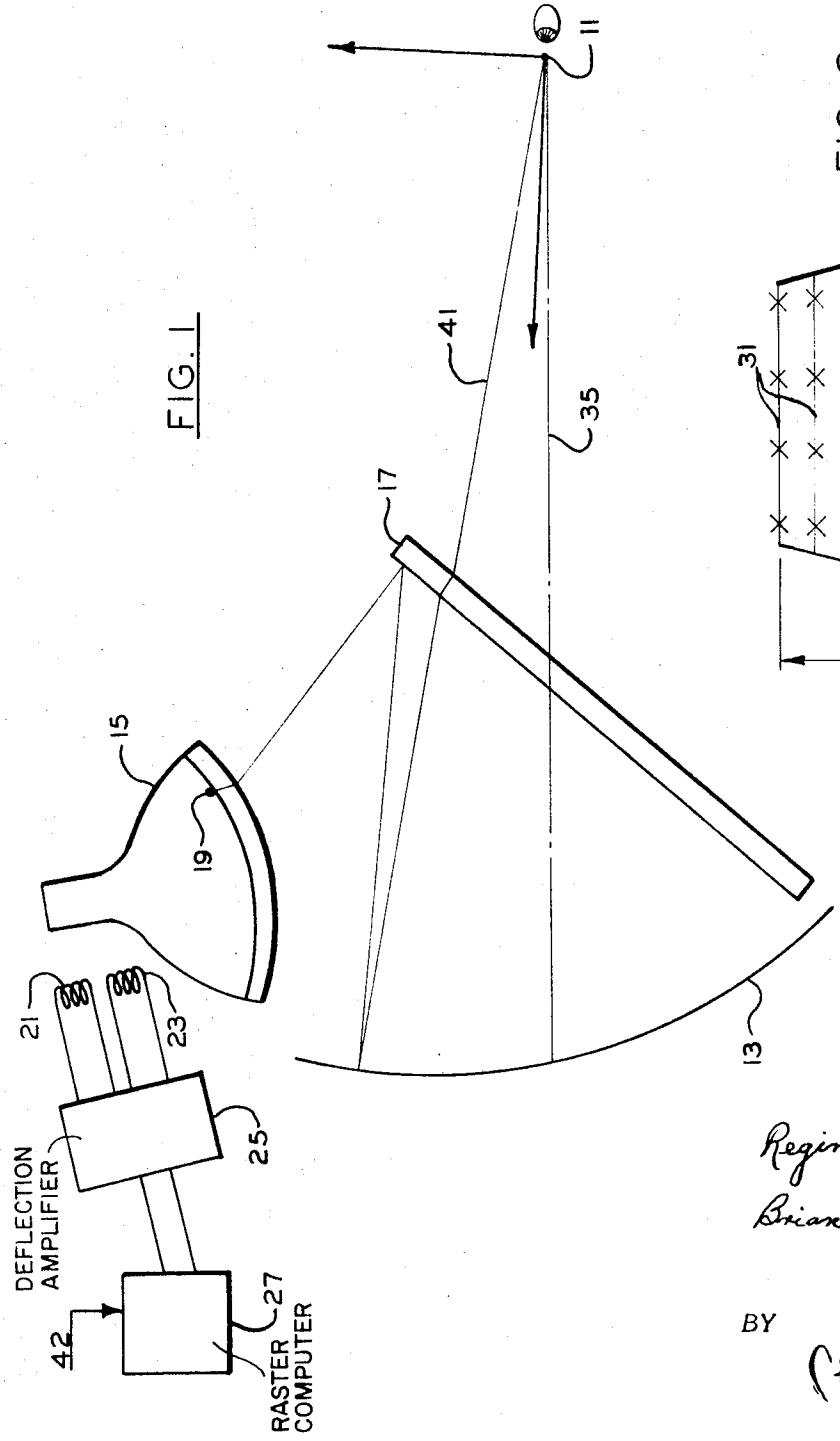

FIG. 2

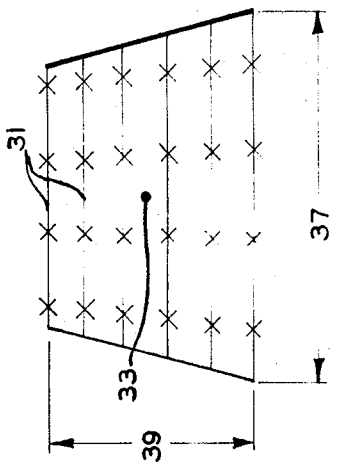

Reginald F. H. McCoy
and
Brian J. Woycechowsky
INVENTORS

BY

Charles S. McGuire
ATTORNEY

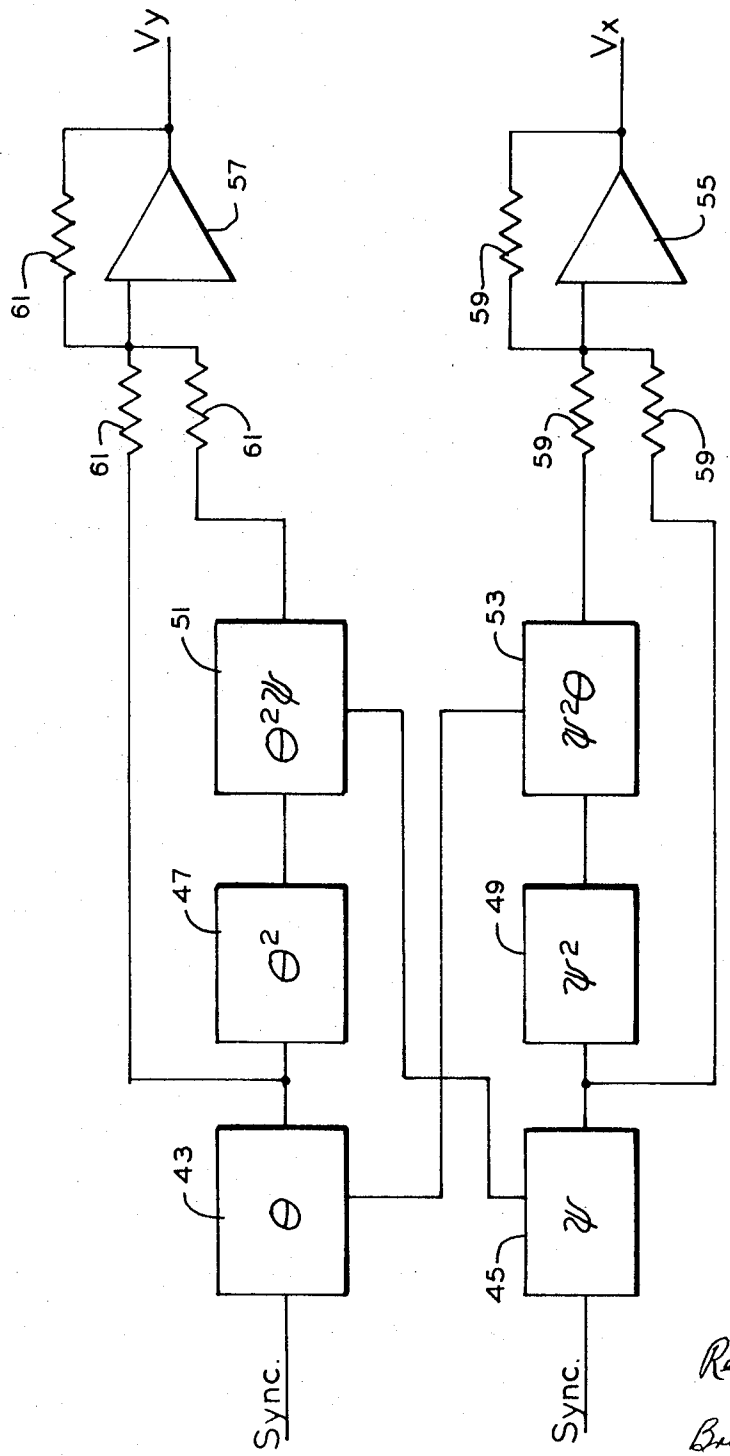

FIG. 3

Reginald F. H. Mc Coy
and
Brian J. Woycechowsky
INVENTORS

BY
Charles S. McGuire
ATTORNEY

METHOD OF GENERATING A DISPLAY RASTER

This invention relates to CRT visual display systems in general and more particularly to a method of generating a spherical raster in such systems.

U.S. Letters Patent No. 3,697,681 describes apparatus for placing an image on a matrix display and also shows a type of spherical display with which it may be used. In that apparatus, provision is made to assure continuous raster lines from one display of the matrix to another by means of sweep delays. For such an image placement system to function properly with a spherical display it is necessary that the raster lines as viewed by an observer trace lines of latitude, with all raster lines tracing equal angles in equal times. The present invention contemplates a method for obtaining the type of raster scan which will trace lines of latitude with all raster lines tracing equal angles of longitude in equal time. While the method is herein described as applied to a single display, it can of course be utilized with each of plural displays in systems such as that shown in the aforementioned patent.

It is the object of this invention to provide a method of scanning in a display system which will scan equal angles of longitude in equal time along lines of latitude.

Another object is to provide such a method which can be used in a matrix type display.

Other objects of the invention will in part be obvious and will in part appear hereinafter.

The invention accordingly comprises the several steps and relation of one or more of such steps with respect to each of the others thereof, which will be exemplified in the method hereinafter disclosed, and the scope of the invention will be indicated in the claims.

For a fuller understanding of the nature and objects of the invention reference should be had to the following detailed description taken in connection with the accompanying drawings, in which:

FIG. 1 is a diagrammatic representation of a typical optical and scanning system which may be utilized to practice the present invention;

FIG. 2 is a view of the raster to be displayed on the CRT of FIG. 1 as seen through spherical optics; and

FIG. 3 is a block diagram of the raster computer of FIG. 1.

As previously mentioned, the display of Patent No. 3,697,681 requires a scan in which lines of latitude are traced, with equal angles being traced in equal time. A standard TV raster scan does not fulfill this requirement and, for applications contemplated by this invention, it is necessary to drive the scan on a CRT display in the described manner with sufficient accuracy to avoid unacceptable distortion.

FIG. 1 shows an observer's eyepoint **11** located at the center of curvature of a spherical mirror **13**. Eyepoint **11** is also the origin of a set of coordinate axes in which two of the axes define an equitorial plane of the sphere of which mirror **13** is a segment. Images generated on CRT **15** are reflected by a beamsplitter **17** to mirror **13** which causes the image to appear as if at infinity.

To form a raster on the face of CRT **15** a spot **19** is driven in response to currents in coils **21** and **23**.

These currents are developed in deflection amplifier **25** which has as inputs voltages generated by a display raster computer **27**. Display raster computer **27** provides voltages to drive spot **19** to form a raster comprising lines of latitude, with the spot traveling through equal angles of longitude in equal times, where latitude and longitude are measured with respect to the axes centered at the observer's eyepoint **11**. (Latitude, which may also be viewed as elevation, is analogous to the vertical or slow scan of standard television usage and longitude, which may also be considered as azimuth, is analogous to the horizontal or fast scan in standard television.) This last point, i.e., that the path traced by the spot is measured with respect to eyepoint **11**, must be kept in mind. Because of this the whole system, including the spherical display optics and not just the pattern to be traced on the CRT, must be considered, as will be explained in the ensuing description.

FIG. 2 shows the type of raster which is desired. Each line **31** is an equi-angular segment of a line of latitude and each must be scanned in equal time. The point **33** is the center of the display and corresponds to the intersection of line **35** on FIG. **1** with the display. This point may be defined by an azimuth and elevation in reference to the axes of FIG. 1. In addition, the horizontal and vertical field of view of the display, indicated respectively by the dimensions **37** and **39**, are known. Thus, every point on the raster may be defined by a deviation in azimuth and elevation from the center **33**, which in turn may be directly converted to values of azimuth and elevation measured from eyepoint **11** by addition of the azimuth and elevation of point **33**.

Referring back to FIG. **1**, it is necessary then for computer **27** to provide voltages which will result in the desired type of scan. As previously mentioned, the spot position on the raster at any given time can be defined by an azimuth and elevation measured from the axes centered at eyepoint **11**. The desired raster will scan across the field of view at a constant elevation angle with the spot traveling through equal angles of azimuth in equal time periods. The value of elevation should then increment and the azimuth scan be repeated, i.e., the desired scan is a series of lines with each a line of constant latitude (elevation). Each line scans through the same azimuth angle and the angular rate of travel is equal for equal periods of time. Accordingly, the scan in elevation should be a series of steps of equi-angular increments amounts. However, a linear television type scan can be used in the elevation direction without introducing significant error. As the elevation scan will travel only one increment between azimuth lines for each azimuth scan, the maximum error in the elevation direction will be one TV line.

It can be seen that the voltage required from computer **27** is a function of azimuth and elevation. That is:

$$V_x = f(\psi, \theta)$$

$$V_y = f(\psi, \theta)$$

Where

ψ = azimuth

θ = elevation

$V_x = X$ voltage produced by computer **27**

$V_y = Y$ voltage produced by computer **27**

The functions of azimuth and elevation are not precisely known but may be assumed to be represented by polynomials, e.g.:

$V_x = K_1\psi + K_2\psi^2\theta +$ higher order terms

$V_y = K_3\theta + K_4\theta^2\psi +$ higher order terms

Representing unknown functions in this manner is an expedient well known in the art.

Moreover, polynomials may be implemented in analog hardware also using well known techniques. For example, voltages corresponding to ψ and θ may be obtained by integrating a constant voltage periodically in the same manner as TV scans are generated. Values for ψ^2, ψ^3, θ^2, θ^3 may be obtained by multiplications or by successive integrations. The combined values may be obtained by using standard multiplication techniques. One such method is described in U.S. Patent application, Ser. No. 130,076 of K. Harf filed on even date herewith and another in U.S. Letters Patent No. 3,688,098 issued on an application, Ser. No. 108,446 of T. Cwyner and J. R. Trzeciak filed Jan. 21, 1971, both of which applications are assigned to the same assignee as the present invention. The implementation of these equations will then form raster computer **27**. Signals on line **42** will provide a sync command to initiate the scans at which time ψ and θ will be generated and the polynomial values calculated to provide inputs to deflection amplifier **25**.

However, for an operative system, the constants which multiply the terms in the polynomial must be determined. This may be accomplished by using a suitable method of numerical analysis, such as the well known method the least squares. In order to use this method, a table interrelating ψ, θ, V_x and V_y must be constructed and, to this end, three dimensional ray trace data for a matrix of points as viewed from eyepoint **11** must be developed. Each of these points, indicated by the X's on FIG. **2**, may be defined by an azimuth and elevation angle, i.e., a line **41** of known azimuth and elevation on FIG. **1**, for example, is traced through the system taking into account diffraction in beamsplitter **17**, and CRT **15**, and the curvature differences between mirror **13** and CRT **15** to obtain a location **19** on the phosphor of the CRT **15**. This procedure is repeated with other lines of known azimuth and elevation originating at eyepoint **11** to obtain additional points which correspond to each of the X's on FIG. **2**.

It is then necessary, using the deflection coil characteristics of coils **23** and **21** and the transfer function of the deflection amplifier, to find the voltage inputs to the deflection amplifier which will position the spot at the desired location. Thus, for each X position on the raster image of FIG. **2**, corresponding values of θ, ψ, V_x and V_y are tabulated. This information may then be used in a digital computer to evaluate the polynomial coefficients by numerical methods, e.g., the method of least squares. With the polynomial coefficients determined, actual values of V_x and V_y may be obtained by summing the previously obtained waveforms in a summing amplifier scaled to multiply each value by the proper constant.

Although the method of obtaining table values described above works well, it poses difficult problems in analysis of optical and electrical characteristics of the system. There is, however, a more practical method of obtaining this data in which, the raster computer **27** of FIG. **1** may be replaced with a dot or grid generator having linear sweeps. In that case the X's of FIG. **2** would represent the dots or line intersections generated. As the generator is linear, X and Y voltages for each point will be known.

With the array of points, each of known voltage, displayed on the CRT it is then only necessary to determine the angles ψ and θ. This may be done by placing a transit or theodolite at eyepoint **11** and measuring the azimuth and elevation of each point. By so doing the optical characteristics of the system are implicitly taken into account as are the characteristics of the deflection coils and deflection amplifier. The resulting table is then used in the manner described above to find the coefficients.

Alternatively, the spot can be driven to a series of static positions corresponding to the X's of FIG. **2** and the angular measurements then taken. However, the use of a dot or grid generator is preferable since it more closely approximates normal system operation by its dynamic nature than does a static positioning.

FIG. **3** shows a block diagram of a raster computer where only a few terms are used. For example, assume that:

$$V_x = K_1\psi + K_2\psi^2\theta$$

and

$$V_y = K_3\theta + K_4\theta^2\psi$$

In block **43** an integration will commence with the sync command and block **43** will output a voltage corresponding to θ, likewise block **45** will output a voltage corresponding to θ. It should be noted that with a linear integration the change in voltage (representing angles) will be equal for equal periods of time as is required. The outputs will be scaled to provide the desired voltage ranges representing the prescribed field of view in the time allotted for one scan line. The outputs from **43** and **45** respectively are squared in blocks **47** and **49** using one of the methods described above.

In block **51** θ^2 is multiplied by ψ and in block **53** ψ^2 is multiplied by θ. The final output values of $K_1\psi + K_2\psi^2\theta$ and $K_3\theta + K_4\theta^2\psi$ are obtained by summing in respective amplifiers **55** and **57**. The values of resistors **59** and **61** which provide the multiplication by the constants K_1 through K_4 in a manner well known in the art are determined from the polynomial coefficients.

One additional problem may exist. The analogs of θ, ψ, ψ^2, θ^2, $\psi^2\theta$ and $\theta^2\psi$ obtained in the hardware may not be true representations of those values. If this is the case, systems accuracy may be improved by measuring and determining what these outputs actually are. These measured functions may then be substituted into the polynomials when determining the polynomial coefficients by numerical means. In this way the constants will not only take into account the characteristics of all the rest of the system but also those of the raster computer itself. Likewise, rather than use the assumption of infinite gain for the amplifiers involved, as is the custom, the full amplifier equation using actual gain may be used in determining the summing amplifiers' input resistors.

Thus a method and apparatus which will generate a

scan which will trace equal angles of azimuth in equal time as viewed from an eyepoint has been shown. Although the system has been described for use in a matrix display, it is equally applicable whenever a special type of scan is required. For example, the same system might be used where an accurate linear scan is required as viewed from a viewing point. In that case, the spot position would be defined in terms of tan θ and tan ψ. By substituting these functions for θ and ψ in the equations shown above an accurate linear scan may be generated.

What is claimed is:

1. In a display system comprising a CRT display and optics through which the CRT is viewed, a method to produce a raster scan on said CRT formed of lines which will appear to trace a predetermined path as viewed from an observer eyepoint comprising:

a. determining a first set of functions which describes the predetermined paths of said lines as a function of time;

b. representing the predetermined paths by two polynomials composed of terms which are functions of said first set of functions, the first of said polynomials representing a voltage to position the spot of the CRT vertically and the second of said polynomials representing a voltage to position said spot horizontally;

c. defining an array of points in said system as viewed from the observer eyepoint in terms of the variables of said first set of functions;

d. determining the voltages required at the input of said CRT display to cause its spot to be deflected to positions which correspond to each point in said array;

e. using said array and said voltages to perform numerical analysis to calculate constants to be used in said two polynomials; and

f. implementing said polynomials in analog computing hardware and providing the outputs of said hardware to said CRT display.

2. The invention according to claim 1 wherein said first set of functions are azimuth and elevation.

3. The invention according to claim 1 wherein said first set of functions are the tangent of azimuth and the tangent of elevation.

4. The invention according to claim 1 and further including the steps of replacing the polynomial terms with the actual outputs of said hardware and using said polynomials with replaced terms to compute said constants.

5. The invention according to claim 1 wherein said voltages are determined by tracing a ray from a nominal eyepoint of an observer of said CRT for each of said points in said array to determine the point on the phosphor of said CRT where a spot must be to appear at that point in said array, and determining from the deflection coil characteristics and the deflection amplifier transfer function the voltage required to position the spot at that point on the CRT phosphor.

6. The invention according to claim 1 where the method of numerical analysis is the method of least squares.

7. The invention according to claim 1 wherein said array of points is generated on the CRT by a function generator, the definition of said points in terms of the variables of said first set of functions is determined by optical measuring means, and said input voltages are determined from the characteristics of said function generator.

8. The invention according to claim 7 wherein said optical measuring means is a theodolite.

9. The invention according to claim 1 wherein the steps of determining said voltages comprise:

a. sighting along lines from said observer eyepoint which corresponds to said array;

b. statically positioning the spot of said CRT to intersect each of said lines; and

c. recording the voltages required to position said spot at each intersection.

* * * * *

UNITED STATES PATENT OFFICE
CERTIFICATE OF CORRECTION

Patent No. 3,719,817 Dated March 6, 1973

Inventor(s) Reginald F. H. McCoy et al

It is certified that error appears in the above-identified patent and that said Letters Patent are hereby corrected as shown below:

Column 4, line 34, change "θ " to --Ψ--.

Signed and sealed this 7th day of May 1974.

(SEAL)
Attest:

EDWARD M.FLETCHER,JR.
Attesting Officer

C. MARSHALL DANN
Commissioner of Patents

FORM PO-1050 (10-69)

USCOMM-DC 60376-P69
★ U.S. GOVERNMENT PRINTING OFFICE : 1969 O—366-334.

UNITED STATES PATENT OFFICE
CERTIFICATE OF CORRECTION

Patent No. 3,719,817 Dated March 6, 1973

Inventor(s) Reginald F. H. McCoy et al

It is certified that error appears in the above-identified patent and that said Letters Patent are hereby corrected as shown below:

Column 4, line 34, change "θ" to --Ψ--.

Signed and sealed this 7th day of May 1974.

(SEAL)
Attest:

EDWARD M.FLETCHER,JR.
Attesting Officer

C. MARSHALL DANN
Commissioner of Patents

USCOMM-DC 60376-P69
* U.S. GOVERNMENT PRINTING OFFICE : 1969 O—366-334.