(No Model.) 2 Sheets—Sheet 1.

W. B. WHEELER.

COIN OPERATED ELECTRICAL APPARATUS.

No. 590,427. Patented Sept. 21, 1897.

Fig. 1.

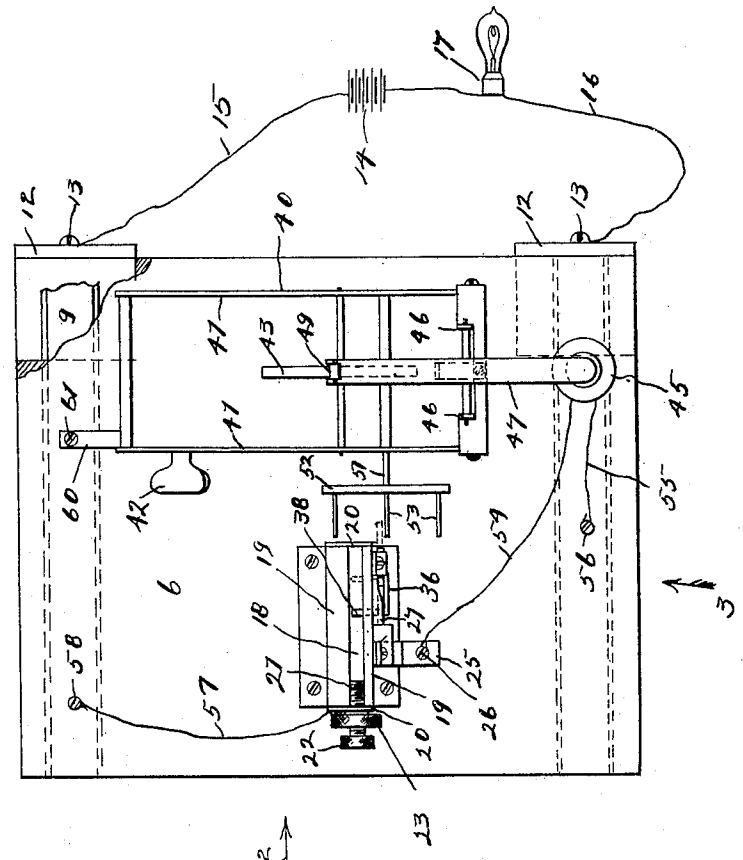

Fig. 4.

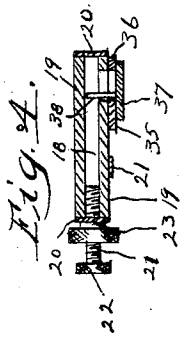

WITNESSES.

S. S. Sayre

E. Gerst

INVENTOR

Webb B. Wheeler.

BY

Dyer Tate & Co.

ATTORNEYS.

THE NORRIS PETERS CO., PHOTO-LITHO., WASHINGTON, D. C.

(No Model.) 2 Sheets—Sheet 2.

W. B. WHEELER.

COIN OPERATED ELECTRICAL APPARATUS.

No. 590,427. Patented Sept. 21, 1897.

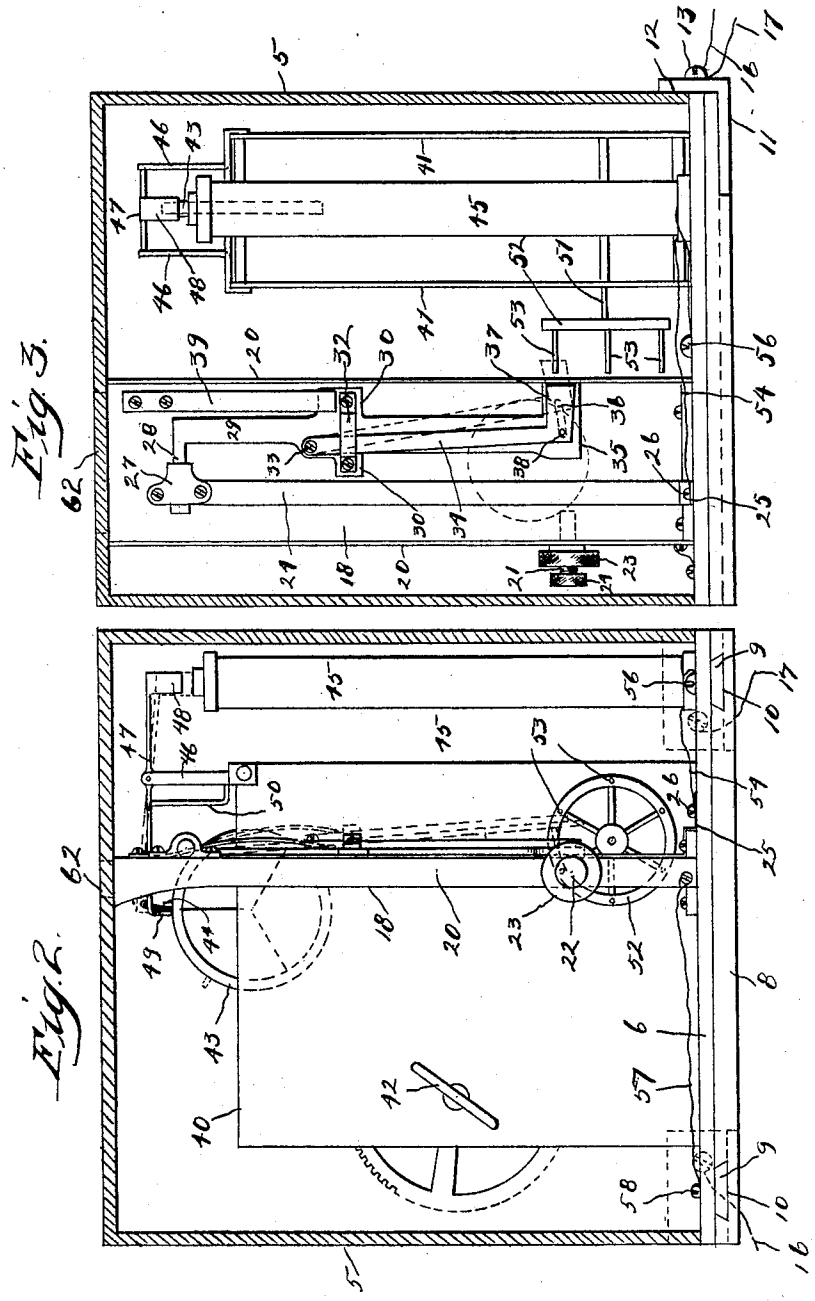

WITNESSES,

S. S. Sugar

C. Gerst

INVENTOR

Webb B. Wheeler.

BY

Edgar Tate & Co

ATTORNEYS.

THE NORRIS PETERS CO., PHOTO-LITHO., WASHINGTON, D. C.

UNITED STATES PATENT OFFICE.

WEBB BAKER WHEELER, OF LINCOLN, NEBRASKA.

COIN-OPERATED ELECTRICAL APPARATUS.

SPECIFICATION forming part of Letters Patent No. 590,427, dated September 21, 1897.

Application filed March 16, 1897. Serial No. 627,838. (No model.)

To all whom it may concern:

Be it known that I, WEBB BAKER WHEELER, a citizen of the United States, residing at Lincoln, in the county of Lancaster and State of Nebraska, have invented certain new and useful Improvements in Coin-Operated Electrical Apparatus, of which the following is a full and complete specification, such as will enable those skilled in the art to which it appertains to make and use the same.

This invention relates to devices for turning on and cutting off an electric current by means of a coin deposited in a suitable coin-chute; and the object thereof is to provide a device of this class which is adapted for use in connection with a revolving stereoscope, microscope, stereopticon, and for other and similar devices, and in which the apparatus is so arranged that the light may be turned on for any desired length of time—as, for instance, from one to five minutes.

The invention is fully disclosed in the following specification, of which the accompanying drawings form a part, in which—

Figure 1 is a plan and diagrammatic view of the apparatus which I employ; Fig. 2, a side view looking in the direction of the arrow 2 of Fig. 1 and showing the apparatus in full lines, the casing thereof being shown in section; Fig. 3, a view at right angles to that of Fig. 2 and looking in the direction of the arrow 3 of Fig. 1, the casing of the apparatus being shown in section; and Fig. 4, a section of a detail thereof.

In the drawings forming part of this specification the separate parts of my improvement are designated by the same numerals of reference in each of the views, and in the practice of my invention I provide an apparatus for the purpose herein specified which comprises a casing 5, which is provided with a bottom 6 and a removable or supplemental bottom 8.

Secured to the bottom 6 of the casing, adjacent to the opposite sides thereof, are metal strips 9, the sides of which are inwardly beveled, and the removable bottom 8 is provided with corresponding grooves 10, by means of which it is connected with the bottom 6 of the casing, said metal strips being adapted to slide into the grooves 10, and secured to the supplemental bottom 8 and countersunk therein, adjacent to the corresponding ends of the metal strips 9, are metal plates 11, each of which is provided with upwardly-curved arms or extensions 12, each of which is provided with a binding post or screw 13. I also provide a battery or electric generator 14, which is in connection with each of said binding posts or screws by means of wires or conductors 15 and 16, and placed in the circuit thus formed is an electric incandescent light 17. I also provide a coin-chute 18, the sides 19 of which are composed of insulating material, and these sides are connected by end strips 20, of metal, and near the bottom of the outer side of the coin-chute is a set-screw 21, which passes through the corresponding metal strip 20 and which is provided with a milled head 22, and mounted on said set-screw outside of the coin-chute is a set-nut 23.

Secured to one of the sides of the coin-chute is a metal plate 24, which extends from near the top to the bottom thereof and which is provided with an outwardly-directed extension 25, with which is connected a binding screw or post 26, and connected with the upper end of the plate 24 is a keeper 27, through which passes the arm 28 of a metal plate 29, which extends downwardly to a point preferably on a level with the set-screw 21, and this metal plate 29 is provided with shoulders or projections 30, which extend in opposite directions and to which is secured a transverse keeper 32, and pivoted to the plate 29, above the keeper 32, as shown at 33, is a spring-lever 34, which extends downwardly through said keeper 32, and the lower end of the plate 29 is provided with a cross-head 35, in which is formed a slot 36, which is shown in dotted lines in Fig. 3 and in full lines in Fig. 4, and the lower end of the spring-lever 34 is provided with a cross-head 37, to which is secured a pin 38, which projects through said slot 36 and through a similar slot in the coin-chute.

The pin 38 is shown in dotted lines in Fig. 3 and in full lines in Figs. 1 and 4, the latter figure being a cross-section of the coin-chute and its connected parts, and the adjacent side of the coin-chute is provided with a slot or opening which corresponds with the slot or opening 36 in the cross-head 35 and the plate 29, through which the pin 38 passes.

Secured to the upper part of the coin-chute, adjacent to the upper end of the plate 29, is a spring 39, the lower end of which bears on one of the shoulders or projections 30, and said plate and said spring are designed to hold the lower end of said plate in contact with the wall of the coin-chute, but said plate is adapted to swing on the arm 28 thereof, and by applying pressure to the lower end of said plate or the cross-head 35 thereof the said lower end may be swung outwardly and will carry with it the lower end of the spring-lever 34 and thus withdraw the pin 38 from the coin-chute, and the spring-lever 34 is also adapted to swing transversely of the coin-chute, as shown in dotted lines in Fig. 3.

Mounted on the bottom 6 of the apparatus, adjacent to the side of the coin-chute opposite that through which the set-screw 21 passes, is a casing or frame 40, composed of two upright plates 41, within which is mounted any suitable form of clockwork mechanism, which is adapted to be wound by means of a key 42, and said clockwork mechanism is provided with a balance-wheel 43, on the upper side of which is formed or secured a pin or projection 44, and mounted adjacent to the clockwork mechanism is an electromagnet 45, and secured to the casing of the clockwork mechanism, adjacent to said magnet, is a standard 46, with which is pivotally connected an armature-lever 47, which is provided at its outer end with an armature 48 and at its inner end with a depending arm or projection 49, which is adapted to operate in connection with the pin 44 on the balance-wheel 43, and secured to the standard 46 is an upright arm 50, which is intended to limit the downward movement of the inner end of the lever 47.

Extending through the lower portion of the casing of the clockwork mechanism and in operative connection with said mechanism is a shaft 51, on the outer end of which is mounted a pin-wheel 52, and said pin-wheel is provided with a plurality of pins 53, which project in the direction of the coin-chute, and the upper portion of this wheel is in line with the lower ends of the plate 29 and the lever 34, and the pins 53, which may be of any desired number, project approximately to the adjacent coin-chute.

The magnet 45 is wound with wire in the usual manner, and extending from the bottom thereof to the binding screw or post 26 is a wire or conductor 54, and another wire or conductor 55 extends also from the bottom of the magnet to a binding post or screw 56, which connects with one of the metal strips 9, and another wire or conductor 57 connects with the metal plate 20 of the coin-chute, through which the set-screw 21 passes, and with a binding post or screw 58, which connects with the opposite metal strip 9, opposite to that with which the screw or post 56 connects.

Any suitable clockwork mechanism may be employed in the casing or frame 40, and it will be apparent that the circuit between the clockwork mechanism and the other parts of the operative apparatus and the battery 41 may be broken at any time by simply sliding the supplemental bottom 8 to one side, so as to disconnect the extensions or arms 12 of the metal plates 11 from the ends of the metal strips 9, which are secured to the bottom of the plate 6 of the operative apparatus.

The base of the clockwork mechanism or the casing thereof, which is metal, is also in connection with the metal strip or plate 9, opposite to that with which the magnet 45 is connected by means of an arm or plate 60, through which passes a screw 61, which contacts with said strip or plate 9, or this connection may be made in any desired manner, and the top of the casing 5 of the apparatus is provided with a slot or opening 62, through which the coin may be inserted into the coin-chute, and the operation will be readily understood from the foregoing description when taken in connection with the accompanying drawings and the following statement thereof.

When the armature-lever 47 is in the position shown in Fig. 2, the mechanism of the clockwork will not operate, and this is the normal position of said lever when the apparatus is not in operation, and in this position of the parts the circuit in which the incandescent light 17 is placed will be opened and said light will not operate.

Whenever it is desired to operate the apparatus, a coin is dropped through the slot or opening 62 into the coin-chute 18, and said coin drops downwardly through said chute and strikes the end of the set-screw 21 and also the pin 38 of the lever 34 and forces the lower end of said lever in the direction of the pin-wheel 52, as shown in dotted lines in Fig. 3. The coin in this position completes the circuit through the set-screw 21, the lever 34, the plate 29, the plate 24, and the wire or conductor 54 of the magnet, and the armature 48 is drawn down and the balance-wheel 43 is released and the clockwork mechanism is free to operate, and at the same time the circuit is completed through the lamp 17 and said lamp is energized, the completion of this circuit being accomplished by means of the wires or conductors 15, 16, 55, and 57 and the metal strips or plates 9, together with the extensions 12 of the metal plates 11.

The duration of the operation of the apparatus will depend upon the number of the pins 53 which are secured to or formed on the wheel 52, and the apparatus will continue to operate until one of said pins strikes the projecting lower end or cross-head 37 of the lever 34 and forces the same outwardly, so as to withdraw the pin 38 from the coin-chute, at which time the coin will drop through into the bottom of the coin-chute. When one of the pins 53 on the pin-wheel 52 strikes the lower end of the lever 34, as above described, the circuit is also completed through the

clockwork mechanism and through said pin-wheel and the wire or conductor 54 to the magnet 45, this operation being accomplished by means of the connection of the clock mechanism with the plate 9 opposite to that with which the magnet is connected, and the clock mechanism will continue to operate until the wheel 52 turns far enough to disengage the pin from the lower end of the lever 34 or the cross-head 36 thereof, and when this connection between said wheel and said lever is broken the circuit through the magnet 45 will be broken and the free end of the armature-lever 47 will drop and engage with the balance-wheel 43 and the clockwork mechanism will be stopped.

It will be apparent that this operation may be repeated as often as desired or each time that a coin is dropped into the coin-chute, and it will thus be seen that I accomplish the object of my invention by means of a device which is simple in construction and operation and perfectly adapted to accomplish the result for which it is intended.

Having fully described my invention, I claim as new and desire to secure by Letters Patent—

1. A device of the class herein specified, the same comprising a base-plate, a clockwork mechanism mounted thereon, an electromagnet mounted adjacent to said clockwork mechanism, an armature-lever pivotally supported above the clockwork mechanism, and adapted to operate to stop the balance-wheel thereof, a coin-chute mounted on said base-plate adjacent to the clockwork mechanism, a pin-wheel connected with said clockwork mechanism, and provided with pins which project in the direction of the coin-chute, a lever pivotally connected with the side of said coin-chute, and adapted to swing in the direction of said wheel, said clockwork mechanism, said magnet, and lever being in an open electric circuit which is adapted to be closed by a coin dropped into the coin-chute, and by which said armature-lever is operated, substantially as shown and described.

2. In an apparatus of the class herein described, the combination with a suitable base-support, of a clockwork mechanism mounted thereon, an electromagnet mounted adjacent to said clockwork mechanism, a pivoted armature-lever which is adapted to operate in connection with the balance-wheel of the clockwork mechanism, a coin-chute mounted on said support, a pin-wheel in connection with said clockwork mechanism, a lever suspended from said coin-chute, and adapted to swing in the direction of said pin-wheel, said lever being adapted to be operated by a coin, and said parts being in an open circuit which is adapted to be closed by said coin, substantially as shown and described.

3. In an apparatus of the class herein specified, the combination with a suitable base-support of a clockwork mechanism mounted thereon, an electromagnet mounted adjacent to said clockwork mechanism, a pivoted armature-lever which is adapted to operate in connection with the balance-wheel of the clockwork mechanism, a coin-chute mounted on said support, a pin-wheel in connection with said clockwork mechanism, a lever suspended from said coin-chute, and adapted to swing in the direction of said pin-wheel, said lever being adapted to be operated by a coin, and said parts being in an open circuit which is adapted to be closed by said coin, said open circuit being provided with an incandescent lamp, substantially as shown and described.

4. In an apparatus of the class herein specified, the combination with a suitable support, of a clockwork mechanism mounted thereon, an electromagnet mounted adjacent to said clockwork mechanism, an armature-lever supported above said clockwork mechanism, and adapted to operate in connection with the balance-wheel thereof, a pin-wheel mounted on a shaft which projects from said mechanism and which is operated thereby, a coin-chute mounted on said support adjacent to said pin-wheel, a lever pivotally connected with said coin-chute and adapted to swing in the direction of said pin-wheel, said lever being adapted to be operated by a coin, and said parts being in an open electric circuit which is adapted to be closed by said coin, substantially as shown and described.

5. In an apparatus of the class herein specified, the combination with a suitable support, of a clockwork mechanism mounted thereon, an electromagnet mounted adjacent to said clockwork mechanism, an armature-lever supported above said clockwork mechanism, and adapted to operate in connection with the balance-wheel thereof, a pin-wheel mounted on a shaft which projects from said mechanism, and which is operated thereby, a coin-chute mounted on said support adjacent to said pin-wheel, a lever pivotally connected with said coin-chute and adapted to swing in the direction of said pin-wheel, said lever being adapted to be operated by a coin, and said parts being in an open electric circuit which is adapted to be closed by said coin, and said support being provided with a supplemental bottom which is adapted to slide thereon, and which is provided with means for opening and closing said circuit, substantially as shown and described.

In testimony that I claim the foregoing as my invention I have signed my name, in presence of the subscribing witnesses, this 6th day of March, 1897.

WEBB BAKER WHEELER.

Witnesses:
HENRY C. HARTLEY,
SIDNEY C. CROUNSE.