(12) INTERNATIONAL APPLICATION PUBLISHED UNDER THE PATENT COOPERATION TREATY (PCT)

(19) World Intellectual Property Organization
International Bureau

(43) International Publication Date
28 July 2005 (28.07.2005)

PCT

(10) International Publication Number
WO 2005/069445 A1

(51) International Patent Classification[7]: H01R 13/627

(21) International Application Number:
PCT/US2005/000323

(22) International Filing Date: 7 January 2005 (07.01.2005)

(25) Filing Language: English

(26) Publication Language: English

(30) Priority Data:
10/751,900 7 January 2004 (07.01.2004) US

(71) Applicant *(for all designated States except US)*: **AMPHENOL-TUCHEL ELECTRONICS GMBH** [DE/DE]; August-Haeusser-Str. 10, D-080 Heilbronn (DE).

(72) Inventors; and

(75) Inventors/Applicants *(for US only)*: **PAVLOVIC, Slobodan** [CA/US]; 1819 Knollwood Deive, Canton, MI 48188 (US). **DRESCHER, Gerhard** [US/US]; 30249 Moulin, Warren, MI 48088 (US). **TORREY, Eric** [US/US]; 11994 Weiman Drive, Pinckney, MI 48197 (US).

(74) Agents: **WOLFE, JR., Charles, R.** et al.; 600 New Hampshire Avenue, NW, Suite 1100, Washington, District of Columbia 20037 (US).

(81) Designated States *(unless otherwise indicated, for every kind of national protection available)*: AE, AG, AL, AM, AT, AU, AZ, BA, BB, BG, BR, BW, BY, BZ, CA, CH, CN, CO, CR, CU, CZ, DE, DK, DM, DZ, EC, EE, EG, ES, FI, GB, GD, GE, GH, GM, HR, HU, ID, IL, IN, IS, JP, KE, KG, KP, KR, KZ, LC, LK, LR, LS, LT, LU, LV, MA, MD, MG, MK, MN, MW, MX, MZ, NA, NI, NO, NZ, OM, PG, PH, PL, PT, RO, RU, SC, SD, SE, SG, SK, SL, SY, TJ, TM, TN, TR, TT, TZ, UA, UG, US, UZ, VC, VN, YU, ZA, ZM, ZW.

(84) Designated States *(unless otherwise indicated, for every kind of regional protection available)*: ARIPO (BW, GH, GM, KE, LS, MW, MZ, NA, SD, SL, SZ, TZ, UG, ZM, ZW), Eurasian (AM, AZ, BY, KG, KZ, MD, RU, TJ, TM), European (AT, BE, BG, CH, CY, CZ, DE, DK, EE, ES, FI, FR, GB, GR, HU, IE, IS, IT, LT, LU, MC, NL, PL, PT, RO, SE, SI, SK, TR), OAPI (BF, BJ, CF, CG, CI, CM, GA, GN, GQ, GW, ML, MR, NE, SN, TD, TG).

Published:
— *with international search report*

[Continued on next page]

(54) Title: ELECTRICAL CONNECTOR WITH SPRING BACK/SELF REJECTION FEATURE

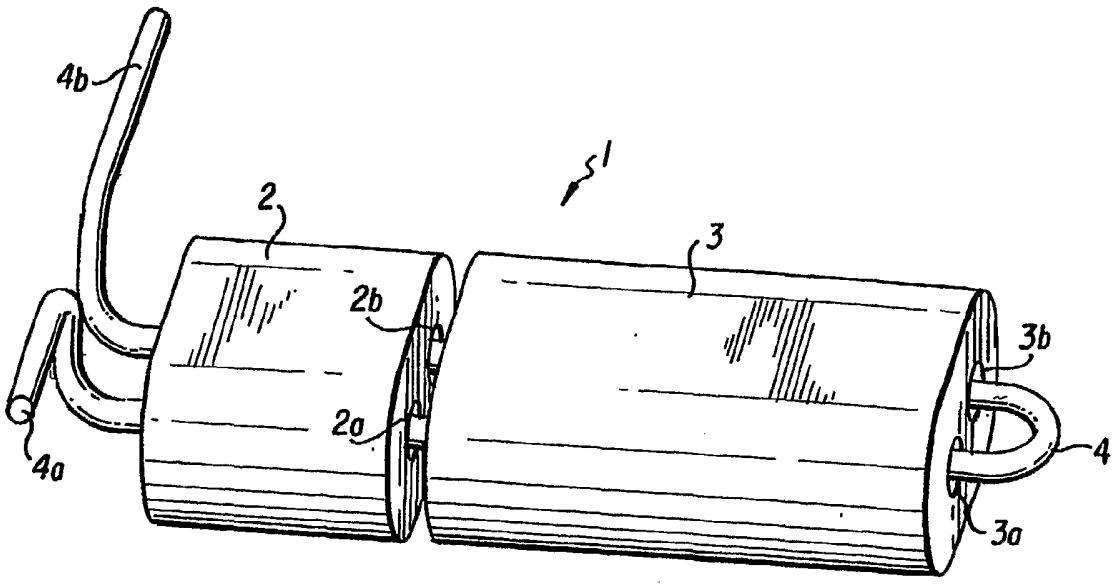

(57) Abstract: An electrical connector with a spring back/self rejection feature is disclosed. More particularly, the electrical connector includes a connector housing, at least one terminal in the connector housing for making contact with a corresponding terminal in a complementary socket, and locking means for locking the connector to the socket when the connector is fully inserted in the socket and in an end position. The connector further includes at least one deflected spring arm that exerts an increasing force on the electrical connector in a direction opposite to a direction of insertion as the electrical connector approaches the end position. The spring arm moves the electrical connector away from the end position when the locking means is not engaged.

WO 2005/069445 A1

For two-letter codes and other abbreviations, refer to the "Guidance Notes on Codes and Abbreviations" appearing at the beginning of each regular issue of the PCT Gazette.

ELECTRICAL CONNECTOR WITH SPRING BACK/SELF REJECTION FEATURE

Cross-Reference to Related Applications

This application is a continuation-in-part of co-pending U.S. utility patent application Serial No. 10/183,354 filed June 28, 2002, which is entirely incorporated herein by reference.

The present invention relates to an electrical connector with a spring back/self rejection feature for positively identifying a locked or mated position.

Background Of The Invention

When known electrical connectors are not properly or fully connected with a corresponding socket, it is very hard to detect such a condition. In particular, when an electrical connector has a physical locking feature for securing the connector in the socket, the connector may have made electrical contact, but the locking feature, such as a locking arm, is not engaged and does not lock the connector. In this situation, the connector may become disconnected during extended use. This problem is particularly prominent with air bag connectors and automotive connectors in general which have to withstand extended periods of vibrations and other physical strains.

It is thus an important object of the invention to overcome one or more of the problems associated with prior art electrical connectors.

More specifically, it is an object of the invention to provide an electrical connector with an automatic self rejection feature for clearly indicating the incomplete connection process.

Summary of the Invention

In order to attain the above objects, the present invention provides an electrical connector, comprising a connector housing, at least one terminal in said connector housing for making contact with a corresponding terminal in a complementary socket, locking means for locking the connector to said socket when the connector is fully inserted in said socket and in an end position, and at least one spring arm, said spring arm being deflected and exerting an increasing force on the electrical connector in a direction opposite to a direction of insertion as the electrical connector approaches said end position, and moving the electrical connector away from the end position when said locking means is not engaged. Preferably, the electrical connector further comprises at least one abutment surface limiting an amount of insertion of the connector into said complementary socket, thereby defining said end position of the connector. The at least one spring arm is preferably formed integrally with the connector housing. In a preferred embodiment of the present invention, the electrical connector comprises three spring arms arranged about the connector. Preferably, the locking means comprises a locking arm formed on the connector.

This invention provides a connector with self rejection feature assuring a fully mated position. Springs are pushing the connector away from the mating half and if a locking leg is not fully engaged, the connector will visibly deviate from the mated position. The unmated position can be detected by visual, electrical or mechanical (pull back) inspection. This feature is very important (CPA - connector position assurance) to prevent unmated connectors being delivered from the high paced assembly lines (automotive). Springs can be part of the housing (molded from

plastic) or separate piece(s) made of metal and attached to the connector housing (depending on specific rejection requirements like force, deflection, size).

Brief Description of the Drawings

The foregoing aspects and other features of the present invention are explained in the following description in combination with the accompanying drawings, in which:

Fig. 1 is a perspective schematic view of a filter assembly including two multi-aperture ferrite cores;

Fig. 2 is a perspective schematic view of the filter assembly of Fig. 1, mounted to a frame, in an intermediate state of assembly and forming a filter frame sub-assembly;

Fig. 3 is a schematic explosive view of an air bag connector including the filter frame sub-assembly of Fig. 2;

Fig. 4 is a perspective schematic view of another filter assembly including two multi-aperture ferrite cores juxtaposed to each other;

Fig. 5 is a schematic explosive view of an air bag connector including the filter assembly of Fig. 4;

Fig. 6 is a schematic explosive view of the air bag connector of Fig. 5 from a different perspective;

Fig. 7 is a perspective schematic view of an alternative filter assembly, generally similar to the filter assembly of Fig. 4, including two concentrically arranged ferrite cores;

Fig. 8 is a schematic explosive view of an air bag connector including the filter assembly of Fig. 7;

Fig. 9 is a perspective schematic view of the terminals of the filter assemblies of Figs. 4-8 and shows the terminal/cable interface with partial IDC (insulation displacement connection) used as insulation strain relief;

Fig. 10 is a perspective schematic view of an air bag connector including a spring back/self rejection feature;

Fig. 11 is a schematic perspective view of the air bag connector of Fig. 10 connected to an air bag initiator;

Fig. 12 is a side view of the combination of an air bag connector and air bag initiator in a state where the air bag connector is not properly connected and is rejected by the spring back/self rejection feature of the connector housing;

Fig. 13 shows a variation of the air bag connector of Figs. 5 and 6;

Fig. 14 is a schematic exploded perspective view of an alternative air bag connector;

Fig. 15 is another schematic exploded perspective view of the alternative air bag connector of Fig. 14; and

Fig. 16 is a schematic exploded perspective view of an alternative airbag connector; and

Fig. 17 is an exploded side view of the self rejection spring depicted in Fig. 16.

Detailed Description of Preferred Embodiments

As used herein, the term "ferrite core" relates to a body or block of ferrite material having at least one opening therethrough. While the term "core" may imply the use of the ferrite body as a core for a coil, such coil may or may not be present, depending on desired filtering performance. In fact, in presently preferred embodiments of the invention, no coil is wound around the "ferrite cores".

Fig. 1 shows a filter assembly 1, in particular for EMI protection, including two multi-aperture ferrite cores 2 and 3. The first ferrite core 2 is of a generally cylindrical shape having a generally oval cross-section with two apertures 2a, 2b therein. The first ferrite core 2 is preferably made of a material with maximum performance in the higher frequency range of the targeted filter frequency range. The second ferrite core 3 is of a generally similar shape to the first ferrite core 2 and includes two apertures 3a and 3b therein. The second ferrite core 3 is preferably made of a material with maximum performance in the lower frequency range of the targeted filter frequency range. The respective lengths of the first and second ferrite cores 2 and 3 may be determined to be in accordance with the desired performance. Moreover, the size and cross-sectional shape of the ferrite cores 2 and 3 may be chosen in accordance with the desired performance and available space.

Of course, it is possible to use more than just two ferrite cores. With spatial constraints permitting, a larger number of ferrite cores could be used. Also, within the same space, a larger number of smaller ferrite cores could be used. Length, overall size, and material of each ferrite core may be determined individually so as to tailor a desired filter performance in a particular frequency range of interest.

The apertures 2a and 3a, and the apertures 2b and 3b, respectively, in the ferrite cores 2 and 3 are aligned so as to form respective passages through both ferrite cores. It will be understood that, in principle, any plurality of apertures and passages may be used, even though it is presently preferred to use only two passages as shown in Fig. 1. A conductor 4 is looped through the passages formed in the ferrite cores 2 and 3. In particular, starting at one end 4a of the conductor 4, the conductor 4 is first guided through aperture 2a of ferrite core 2 and then through aperture 3a of ferrite core 3. At the end of aperture 3a, the conductor exits the ferrite core 3 and re-enters the same ferrite core 3 at aperture 3b. The conductor 4 is then guided through aperture 3b of ferrite core 3 and aperture 2b of ferrite core 2 where the conductor 4 exits ferrite core 2 at its other end 4b. By having at least two apertures in the ferrite cores and directing a signal through both (or more) of the apertures, the filtering performance of the ferrite cores is enhanced because the signal passes several times through the ferrite cores. Still, the multi-aperture ferrite cores need less space for the same filtering performance than a multiplicity of individual ferrite cores.

The conductor 4 may be made of insulated copper wire for conductive ferrite cores, or of solid copper wire for nonconductive ferrite cores. It will be understood that the conductor 4 may also be made of any other conductive material such as silver, gold etc., with the conductive material being insulated in case of conductive ferrite cores.

The two ends 4a and 4b are preferably bent twice by about 90 degrees, first in parallel to each other and then away from each other, so that the ends 4a and 4b are generally co-linear, but facing away from each other.

While the filter assembly as described above may be used in any environment and application, it is presently preferred to weld or solder the filter assembly to a frame. A filter frame sub-assembly 5 including the filter assembly 1 described above and a frame 6 is shown in Figs. 2 and 3 of the drawings. The frame 6 is preferably made of a single piece of stamped and bent conductive sheet metal. The frame 6 has a planar main body of a general U-shape having legs 6a and 6b, with female contacting portions 6c, 6d being bent by 90 degrees and extending away from the distal ends of the legs 6a, 6b. It will be understood that the female contacting portions 6c and 6d could be replaced by male contacting portions, such as pins, without departing from the scope of the invention. The filter assembly 1 is placed transverse over the legs 6a and 6b of the frame 6, and the ends 4a and 4b of the conductor 4 are soldered, welded or otherwise conductively attached to one of the legs 6a of frame 6 at attachment points 7 and 8. Between the attachment points 7 and 8, frame 6 comprises a web 9 of reduced width or thickness which will be cut when the filter frame sub-assembly is mounted for use, e.g. in a connector, such as air bag connector 10 shown in Fig. 3. At the apex of the U-shape, frame 6 comprises another web 11 of reduced width or thickness which also will be cut when the filter frame sub-assembly is mounted for use. On both sides of web 11, frame 6 comprises cable contact areas 12 and 13 for soldering, welding, crimping or otherwise conductively attaching cables 14, 15 (see Fig. 3) for conducting a signal to be filtered by the filter assembly 1.

The filter frame sub-assembly 5 of Fig. 2 may advantageously be used in the minimized angled air bag connector 10 shown in Fig. 3. The air bag connector 10 comprises a connector housing 16 made of an electrically insulating material and having a main portion 16a and a nozzle or contact portion 16b. Two cables 14, 15

extend from the connector housing 16 through respective openings 16c and 16d. The ends of the cables 14, 15 are conductively attached to cable contact areas 12 and 13 of the frame 6. The contacting portions 6c, 6d of the frame 6 extend into openings formed in the contact portion 16b of the housing 16 for making contact with complementary contacting portions in a complementary socket to which the connector is to be attached.

A cover 17 made of an electrically insulating material is placed on the connector housing 16, covering the filter frame sub-assembly 5 in the connector housing 16. The cover 17 is snapped on the connector housing 16 or is attached thereto in any other suitable manner.

Fig. 4 is a perspective schematic view of another filter assembly 101 including two multi-aperture ferrite cores 102, 103 juxtaposed to each other. The ferrite cores 102 and 103 are generally similar to the ferrite cores 2 and 3 of Fig. 1. However, the apertures 102a, 102b and 103a, 103b of the ferrite cores 102 and 103 are larger in diameter than those of the ferrite cores 2 and 3, as will be explained hereinafter.

The first ferrite core 102 is of a generally cylindrical shape having a generally oval cross-section with two apertures 102a, 102b therein. The first ferrite core 102 is preferably made of a material with maximum performance in the higher frequency range of the targeted filter frequency range and is preferably non-conductive. The second ferrite core 103 is of a generally similar shape to the first ferrite core 102 and includes two apertures 103a and 103b therein. The second ferrite core 103 is preferably made of a material with maximum performance in the lower frequency range of the targeted filter frequency range and is preferably conductive. The respective lengths of the first and second ferrite cores 102 and 103 may be

determined to be in accordance with the desired performance. Moreover, the size and cross-sectional shape of the ferrite cores 102 and 103 may be chosen in accordance with the desired performance and available space.

Of course, it is possible to use more than just two ferrite cores. With spatial constraints permitting, a larger number of ferrite cores could be used. Also, within the same space, a larger number of smaller ferrite cores could be used. Length, overall size, and material of each ferrite core may be determined individually so as to tailor a desired filter performance in a particular frequency range of interest.

The apertures 102a and 103a, and the apertures 102b and 103b, respectively, in the ferrite cores 102 and 103 are aligned so as to form respective passages through both ferrite cores. It will be understood that, in principle, any plurality of apertures and passages may be used, even though it is presently preferred to use only two passages has shown in Figs. 4 and 5.

As can be seen best in Fig. 5, the filter assembly 101 of Fig. 4 comprises two angled terminals 106, each comprising a leg 106a, 106b for making contact, e.g. with respective cables 114, 115, and a contacting portion 106c, 106d. It will be understood to that for the function of the filter assembly, the specific implementation of the angled terminals 106 is not essential; rather, all that is necessary to achieve the desired to filtering function, is a conductor for conducting a signal through the apertures of the ferrite cores 102 and 103 when the filter assembly is mounted and put into use.

The terminals 106 are preferably made of stamped and bent conductive sheet metal, either from a single piece or with the legs and contacting portions formed

separately and being soldered, welded or otherwise conductively attached to each other.

In the preferred embodiment of Figs. 4 and 5, the contacting portions 106c and 106d are female contacting portions. It will be understood that the female contacting portions 106c and 106d could be replaced by male contacting portions, such as pins, without departing from the scope of the invention. The legs 106a, 106b of the terminals 106 comprise cable contact areas 112 and 113 for soldering, welding, crimping or otherwise conductively attaching cables 114, 115 for conducting a signal to be filtered by the filter assembly 101.

The filter assembly 101 of Fig. 4 may advantageously be used in the minimized angled air bag connector 110 shown in Figs. 5 and 6. The air bag connector 110 comprises a connector housing 116 made of an electrically insulating material and having a main portion 116a and a nozzle or contact portion 116b. Two cables 114, 115 extend from the connector housing 116 through respective openings 116c and 116d. The ends of the cables 114, 115 are conductively attached to the cable contact areas 112 and 113 of the terminals 106. The female contacting portions 106c, 106d of the terminals 106 together with the ferrite cores 102, 103 extend into an opening 118 formed in the contact portion 116b of the housing 116 for making contact with complementary contacting portions in a complementary socket to which the connector is to be attached. The contact portion 116b of the housing 116 is formed such that the female contacting portions 106c, 106d of the terminals 106 together with the ferrite cores 102, 103 may be placed therein with the ferrite cores 102, 103 being retained within the contact portion 116b of the housing 116 while allowing access to the female contacting portions 106c, 106d of the terminals

106. Preferably, the opening 118 in the contact portion 116b of the housing 116 is closed at the bottom, with two smaller openings 118a, 118b being formed for access to the female contacting portions 106c, 106d.

A cover 117 made of an electrically insulating material is placed on the connector housing 116, covering the filter assembly 101 in the connector housing 116. The cover 117 is snapped on the connector housing 116 or is attached thereto in any other suitable manner. The cover 117 may be equipped with a static discharge feature to be described hereinafter.

In order to avoid accidental deployment of an air bag device by static discharge from an operator handling the connector and connecting the connector to an initiator of the air bag device, the connector may be provided with a novel static discharge feature. Therein, a static charge may be discharged from an operator through the connector into a harness to which the air bag connector 110 is connected via the cables 114, 115 while handling the connector and before mating the connector with a socket of the air bag device.

In particular, the cover 117 has a substantially planar main portion 117a. An opening 119 is formed in the main portion 117a at a position overlying one of the terminals 106 when the air bag connector 110 is assembled. The cover 117 further comprises a conductive insert 117b. Preferably, the conductive insert 117b extends across the width of the cover 117. At least a portion of the conductive insert 117b is exposed to the outside when the air bag connector 110 is assembled. In the preferred embodiment shown in Figs. 5 and 6, the conductive insert 117b comprises tabs 120, 121 on both ends thereof. The tabs 120, 121 are positioned on the connector such that the tabs come into contact with the fingers of a user grasping

the connector. Any static charge from the user will be conducted via the tabs 120, 121 to the conductive insert 117b. An air gap is formed in the opening 119 between the conductive insert 117b and the leg 106a of terminal 106. The air gap is adjusted to an appropriate width so as to allow discharge of a certain voltage differential, e.g. 500 VDC, without causing the terminal-to-terminal resistance in the connector to drop below 1 MΩ. Accordingly, any static charge is discharged from the operator through the conductive insert and via the air gap to the terminal 106 and into the harness connected to cables 114, 115 before the connector is connected to an initiator of an air bag, thus eliminating the danger of inadvertent deployment of the air bag device during assembly.

Fig. 7 shows an alternative filter assembly 201, generally similar to the filter assembly 101 of Fig. 4, including two concentrically arranged ferrite cores 202, 203 for combined differential and common mode filtering. Ferrite core 202 is generally similar to either of ferrite cores 102 and 103 of Figs. 4 and 5 and will therefore not be further described. Also, the angled terminals 206 and the cables 214, 215 connected to the terminals 106 are generally similar or identical to the terminals 106 and the cables 114, 115 of Figs. 4 and 5, and will not be further described. Different from the embodiment of Figs. 4 and 5, the second or outer ferrite core 203 has the form of a sleeve fitting around the first or inner ferrite core 202. In an assembled condition, the ferrite cores 202, 203 are concentrically arranged.

The first ferrite core 202 is of a generally cylindrical shape having a generally oval cross-section with two apertures 202a, 202b therein. The first ferrite core 202 is preferably made of a first material with maximum performance in the differential mode of the signal to be filtered. The second ferrite core 203 is of a generally

sleeve-type shape surrounding the first ferrite core 202. The second ferrite core 203 is preferably made of a second material with maximum performance in the common mode of the signal to be filtered. The respective lengths of the first and second ferrite cores 202 and 203 may be determined to in accordance with the desired performance. Moreover, the size and cross-sectional shape of the ferrite cores 202 and 203 may be chosen in accordance with the desired performance and available space.

Of course, it is possible to use more than just two ferrite cores. With spatial constraints permitting, a larger number of ferrite cores could be used. Also, within the same space, a larger number of smaller ferrite cores could be used. Length, overall size, and material of each ferrite core may be determined individually so as to tailor a desired filter performance in a particular frequency range of interest. For example, instead of one inner multi-aperture ferrite core 202, two or more such cores could be used in a juxtaposed fashion with the outer sleeve-type ferrite core 203 covering part or all of the inner cores. As another example, instead of one outer sleeve-type ferrite core 203, two or more such cores could be used in a juxtaposed fashion covering part or all of the inner core(s).

It will be noted that the multi-aperture ferrite cores 102 and 103 of the filter assembly 1 shown in Figs. 1-3 are most effective for differential mode filtering. For improving common mode filtering, the ferrite cores of the embodiment of Figs. 1-3 could be arranged concentrically similar to those shown in Figs. 6 and 7, or one or more additional sleeve-type ferrite cores could be placed around the cores 102 and 103.

The filter assembly 201 of Fig. 7 may advantageously be used in the minimized angled air bag connector 210 shown in Fig. 8. The air bag connector 210 is generally similar to the air bag connector 110 shown in Fig. 5 and will therefore not be described in detail. The air bag connector 210 comprises a housing 216 having a main portion 216a and a nozzle or contact portion 216b. The contact portion 216b of the housing 216 is formed such that the female contacting portions 206c, 206d of the terminals 206 together with the concentrically arranged ferrite cores 202, 203 may be placed therein with the ferrite cores 202, 203 being retained within the contact portion 216b of the housing 216 while allowing access to the female contacting portions 206c, 206d of the terminals 206. Preferably, the opening in the contact portion 216b of the housing 216 is closed at the bottom, with two smaller openings being formed for access to the female contacting portions 206c, 206d.

A cover 217 is placed on the connector housing 216, covering the filter assembly 201 in the connector housing 216. The cover 217 is snapped on the connector housing 216 or is attached thereto in any other suitable manner. The cover 217 may be equipped with the static discharge feature described above in connection with the embodiment of Figs. 5 and 6.

Fig. 9 shows the terminals of the filter assemblies of Figs. 4-8 and illustrates the terminal/cable interface with (partial) IDC (insulation displacement connection) used as insulation strain relief. The following description will be made with respect to terminals 306 which could be identical to the terminals 106 of the embodiment of Figs. 4-6 or to the terminals 206 of Figs. 7 and 8.

The terminals 306 are angled, each comprising a leg 306a, 306b for making contact, e.g. with respective cables (only one cable 314 being shown in Fig. 9) and a contacting portion 306c, 306d.

The terminals 306 are preferably made of stamped and bent conductive sheet metal, either from a single piece or with the legs and contacting portions formed separately and being soldered, welded or otherwise conductively attached to each other.

In the preferred embodiment shown, the contacting portions 306c and 306d are female contacting portions. It will be understood that the female contacting portions 306c and 306d could be replaced by male contacting portions, such as pins, without departing from the scope of the invention. The legs 306a, 306b of the terminals 306 comprise cable contact areas 312 and 313 for soldering, welding, crimping or otherwise conductively attaching cables for conducting a signal to be filtered by the filter assembly (not shown in Fig. 9).

The cables comprise an inner conductor 322 and an outer insulation 323. At the outer end of the cable 314, the inner conductor 322 is exposed and extends beyond the outer insulation 323. The exposed end of the inner conductor 322 is soldered or welded to the cable contact area 312 of the terminal 306, but could equally be crimped or otherwise conductively attached to terminal 306.

The distal end of the leg 306a of terminal 306 is forked and the forked ends are bent by about 90°. The spacing between the forked ends of leg 306a is larger than the diameter of the inner conductor 322, but smaller than the outer diameter of the insulation 323. When the cable 314 is attached to the terminal 306, the cable 314 is pressed with its insulation 323 between the bent forked ends of leg 306a.

Preferably, the forked ends of leg 306a cut into the insulation 323 in order to provide positive locking of the insulation against movement in an axial direction of the cable 314. The edges of the forked ends facing to each other may be sharp so as to facilitate cutting into the insulation 323. For applications where smaller pulling forces on the insulation are expected, it may be sufficient to press the insulation between the forked ends of the terminal in an interference fit without cutting.

Partial IDC maintains a good integrity of the insulation and the conductor and provides better resistance against pulling off the insulation from the conductor in an axial direction of the cable 314 while avoiding weakening of the cable by partially cutting the conductor 322 as would be the case for total (or conventional) IDC. However, for certain applications, it may be possible to use total (or conventional) IDC techniques since the conductor 322 is to be connected with the terminal 306 anyway (such as by soldering or welding of the exposed distal end of conductor 322 to a cable contact portion 312, 313 of terminal 306), i.e. the insulation 323 may be cut all the way through to the conductor 322 by the forked ends of the terminal 306.

Next, a novel spring back/self rejection feature for a connector is explained primarily in connection with Figs. 10-12. While the example shown in these figures is an air bag connector as shown in Figs. 5 and 6 connected to an air bag initiator, the spring back/self rejection feature may be applied to any type of connector, angled or straight, to clearly distinguish between states of proper mating or connection and improper connection.

In Fig. 10, an angled connector 410 is shown with the cover being omitted. A connector housing 416 comprises a main portion 416a and a nozzle or contact portion 416b. The main portion 416a comprises stops or abutment surfaces 424,

425 limiting the distance or amount of insertion of the contact portion 416b into a mating socket such as an air bag initiator 426 shown in Fig. 11. In the connector shown in Fig. 10, the lower surface 424 of the main portion 416a serves as a first stop. As may be seen best in Figs. 6, 11 and 12, a second stop or abutment 425 is formed on the main portion 416a opposite to the first stop 424 with respect to the contact portion 416b.

In the embodiment of Figs. 10-12, there are three spring arms 427, 428, 429 formed integrally with the connector housing 416. For example, the connector housing 416 including the spring arms 427, 428, 428 could be formed by plastic injection molding. The first spring arm 427 is disposed on a rear end side of the connector, whereas the second and third spring arms 428, 429 are disposed on a front end side of the connector. The first spring arm 427 is disposed generally centrally with regard to a longitudinal central axis of the connector main portion 416, whereas the second and third spring arms 428, 429 are arranged to extend generally away from the longitudinal central axis of the connector main portion 416. Thus, the free ends of the spring arms 427, 428, 429 are arranged about the contact portion of the connector such that they form approximately an isosceles triangle in order to apply a force in a direction opposite to the direction of insertion of the connector into the socket, regularly distributed about the circumference of the contact portion of the connector so as to avoid tilting and skewing of the connector. Generally speaking, the spring arms should be arranged about the contact portion of the connector to extend substantially tangentially thereto so as to occupy as little space as possible.

The combination of connector and socket comprises a locking means for locking the connector to the socket when the connector is fully inserted and properly

connected to the socket. In the embodiment shown in Figs. 5-6 and 10-12, the locking feature is implemented as a locking arm 431 formed on the contact portion 416b of the connector. The locking arm 431 is a spring arm attached to the contact portion 416b near the outer end thereof and extending in a direction opposite to the direction of insertion of the connector into the socket and generally parallel to a circumferential surface of the contact portion 416b. The length of the locking arm 431 is preferably less than the length of the contact portion 416b. The free end of the locking arm 431 is preferably flared so as to provide a kind of ratchet. However, it will be understood that the locking arm 431 could be implemented without the flared end and still provide the locking function in combination with a corresponding groove and/or shoulder on the socket.

A recess or shoulder (not shown) is provided on the socket at a location where the free end of the locking arm 431 can come into locking engagement therewith when the connector 410 is fully inserted into the socket, thus locking the connector 410 in an end position within the socket.

When the air bag connector 410 is being connected with an air bag initiator 426, the contact portion 416b of the connector is inserted into a complementary socket (not shown in the drawings) in the air bag initiator 426. Before the contact portion 416b is fully inserted into the socket, the spring arms 427, 428, 429 engage a stop surface 432 formed on the air bag initiator 426, as shown in Figs. 11 and 12. Continued insertion movement of the connector 410 into the socket will deflect the spring arms 427, 428, 429 causing an increasing reaction force until the end position is reached in which the abutment surfaces 424, 425 of the connector 410 contact the stop surface 432 of the initiator 426. In the end position, the locking arm 431

engages the shoulder in the socket locking the connector in the socket. If the end position is not reached, the spring arms 427, 428, 429 will move the connector back to the position of Figs. 11 and 12, thus indicating clearly that no proper connection was made between the connector 410 and the socket.

Many of the features described in the foregoing description may be used individually or combined in a single device. For example, the various filter assemblies disclosed in context with Figs. 1-8 may be used individually in any EMI filter application, or, for example, together with the static discharge feature described in connection with Figs. 5 and 6 and/or with the insulation strain relief feature described in connection with Fig. 9 and/or with the spring back/self rejection feature described in connection with Figs. 10-12. Moreover, the static discharge feature described in connection with Figs. 5 and 6, the insulation strain relief feature described in connection with Fig. 9, and the spring back/self rejection feature described in connection with Figs. 10-12 may each be used, individually or in any combination, on connectors other than the EMI filtered air bag connector described herein.

In Figs. 13-15, variations of some of the features described above are illustrated. The air bag connectors shown in Figs. 13-15 also show some additional features not shown or described above.

In particular, taking reference to the embodiment shown in Fig. 13, an air bag connector 510 comprises a filter assembly 501 similar to the filter assembly 101 of Figs. 4-6. Preferably, a first ferrite core 502 is made of a non-conductive ferrite material, whereas an aligned second ferrite core 503 is made of a conductive ferrite material. In order to isolate the conductive ferrite core 503 from the terminal

extending therethrough, the connector housing 516 comprises an integral molded wall 540, of a generally cylindrical or tubular shape, which fits into one of the openings 503a of the multiaperture conductive ferrite core 503. The wall 540 may also extend into an aligned opening 502a of the other, non-conductive ferrite core 502.

The air bag connector 510 of Fig. 13 also comprises the static discharge feature in the cover 517 and the self rejection feature, both features having been described in detail above. However, in this embodiment, the two features are combined in one single element 517b. The element 517b may preferably be made of stamped and bent sheet metal. The element 517b overlies and spans the width of the cover 517 and forms tabs 520, 521 for making contact with an operator grasping the air bag connector for handling thereof, e.g. during a connection process of the air bag connector with an associated socket. The tabs 520, 521 may reach around side edges of a main portion 516a of the connector housing 516 and may assist in attaching the cover 517 to the connector housing 516. Two curved spring arms 527, 528 are formed integrally with the element 517b. The spring arms 527, 528 form a semi-circle and extend through cut-outs 516e, 516f in the connector housing 516 beyond a lower abutment surface of the connector housing main portion. When the air bag connector 510 is to be connected with a complementary socket (not shown), the spring arms 527, 528 will provide a self rejection feature, pushing the air bag connector 510 away from a connected state, if the connector and the socket are not properly connected and locked in a connected state.

Figs. 14 and 15 show an alternative air bag connector 610 having a different filter arrangement 601 and an alternative self rejection spring 627. The filter

arrangement 601 comprises a first cylindrical ferrite core 602, preferably made of an electrically non-conducting material, and a second multi-aperture ferrite core 603, preferably made of an electrically conducting material. The opening of the first ferrite core 602 is dimensioned to receive one of the terminals 606. One opening 603a of the second multi-aperture ferrite core 603 is sized to receive the first ferrite core 602 therein, whereas another opening 603b of the second multi-aperture ferrite core 603 is sized to receive therein the other one of the terminals 606. The connector housing 616 is formed to preferably snugly receive both ferrite cores 602 and 603.

The self rejection spring 627 is generally U-shaped and may be made of stamped and bent sheet metal. One leg of the U-shaped self rejection spring 627 comprises means for attachment with the connector housing 616. Preferably, the self rejection spring 627 comprises tabs 627a, 627b which are clamped between the connector housing 616 and the cover 617 in the assembled state. The other leg of the self rejection spring 627 is free to extend through an opening formed in the connector housing 616 beyond a lower abutment surface of the connector housing main portion. When the air bag connector 610 is to be connected with a complementary socket (not shown), the spring 627 will provide a self rejection feature, pushing the air bag connector 610 away from a connected state, if the connector and the socket are not properly connected and locked in a connected state.

Figs. 16 and 17 show yet another alternative air bag connector 610 having a filter arrangement 601 similar to that depicted in Figs. 14 and 15 but with an alternative self rejection spring 727. The cover 617 of the connector housing 616 includes an opening 618 to accept and visually identify when the connector 610 is

fully inserted in the socket (not shown). At least one abutment surface 618 or resistance bump is located on the connector housing 616 to limit an amount of insertion of the connector 610 into the complementary socket (not shown).

The self rejection spring 727 (Fig. 17) includes a first spring arm portion 727a that is bent to a regulated angle 'A' with a second spring arm portion 727b. The regulated angle 'A' provides an initial force which varies as the connector 610 is inserted in the complementary socket (not shown). A locking hook 727c is located at one end of the self rejection spring 727 and slidably engages a locking gap 727d, located at a predetermined location on the self rejection spring 727, when the connector 610 and the complementary socket (not shown) are fully mated. The locking gap 727d is positioned in a sliding arm portion 727e of the self rejection spring 727. When in a compressed position, the locking hook 727c seats into the locking gap 727d and prevents the first spring arm portion 727a from moving back to a previous position. When the connector 610 is in a locked position, the locking hook 727c is visible from the top of the cover 617 at the opening 618. The angle 'A' adjusts as a desired sliding initiation force is introduced to mate the connector 610 with the complementary socket (not shown).

In view of the foregoing description, a skilled person will recognize further modifications, objects and advantages of the present invention without departing from the scope of the appended claims.

Claims:

1. An electrical connector, comprising:

a connector housing;

at least one terminal in said connector housing for making contact with a corresponding terminal in a complementary socket,

locking means for locking the connector to said socket when the connector is fully inserted in said socket and in an end position,

at least one abutment surface limiting an amount of insertion of the connector into said complementary socket, thereby defining said end position of the connector, said at least one abutment surface of said connector in said end position engaging a corresponding abutment surface on the socket,

at least one spring arm formed separately from said connector housing and being carried on said connector, said spring arm engaging said abutment surface on the socket and being deflected and exerting an increasing force on the electrical connector in a direction opposite to a direction of insertion as the electrical connector approaches said end position, and moving the electrical connector away from the end position when said locking means is not engaged.

2. The electrical connector according to claim 1, wherein said at least one spring arm is formed integrally with the connector housing.

3. The electrical connector according to claim 1, comprising three spring arms arranged about the connector.

4. The electrical connector according to claim 1, wherein said locking means comprises a locking arm formed on the connector.

5. The electrical connector according to claim 1, wherein an opening is included in the connector housing for accepting and viewing the spring arm.

6. The electrical connector according to claim 5, wherein said opening is located in a cover of the connector housing.

7. The electrical connector according to claim 5, wherein the spring arm includes a locking hook at one end and a locking gap at a predetermined location, said locking hook slidably engages said locking gap and is visible in said opening when the connector is at said end position.

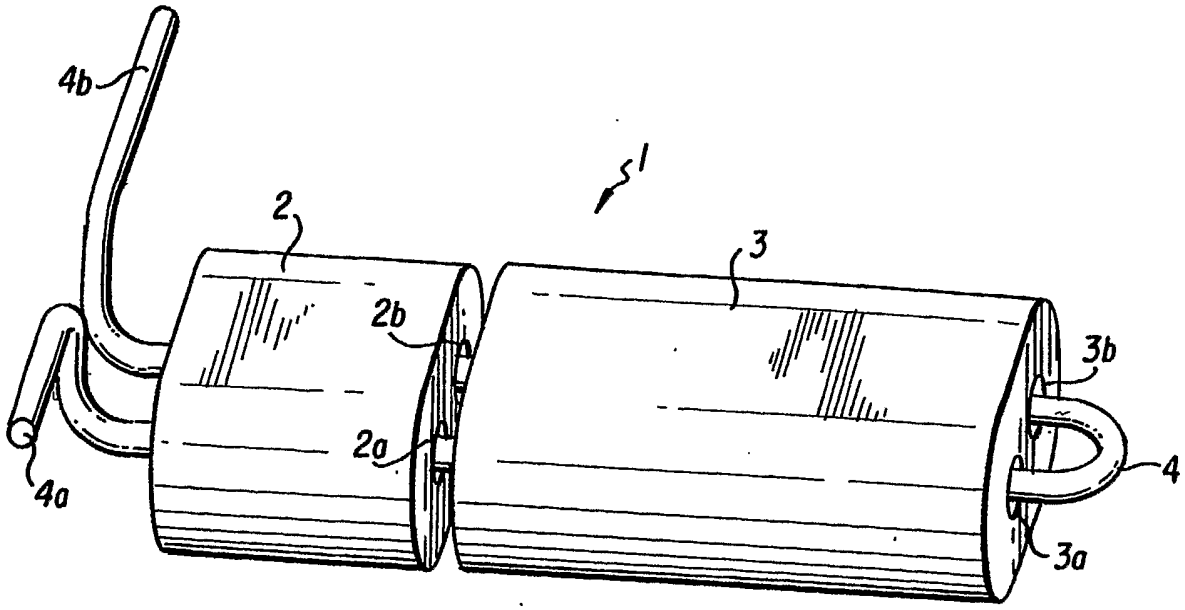

FIG. 1

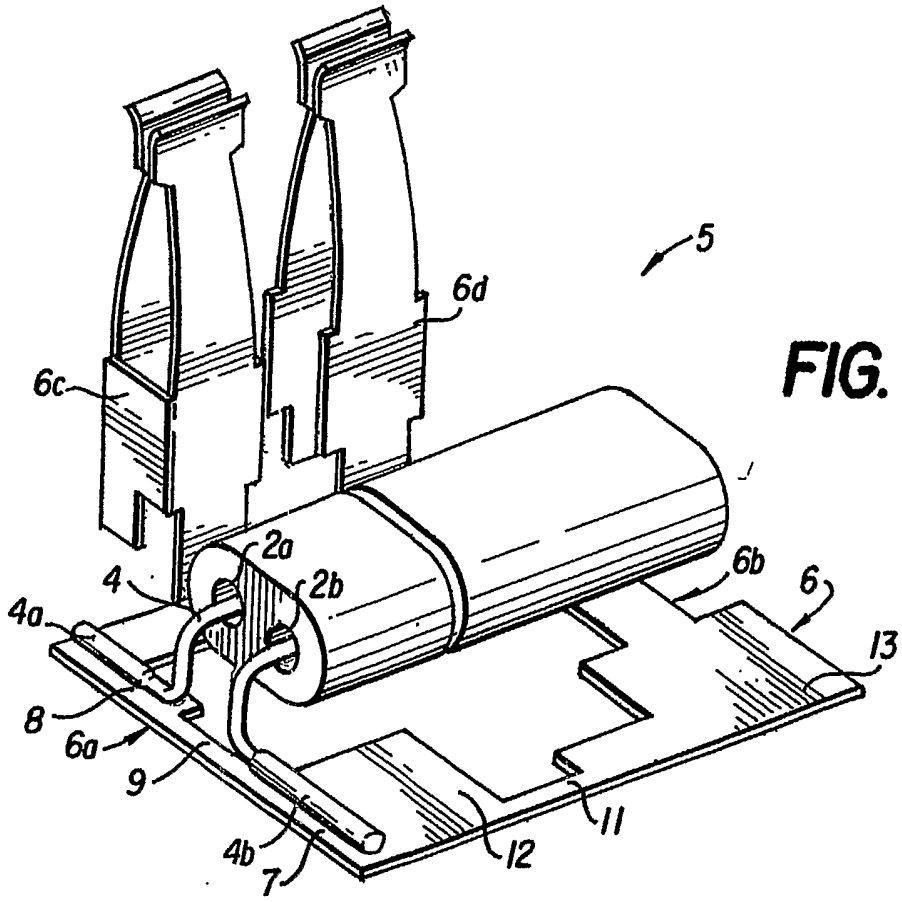

FIG. 2

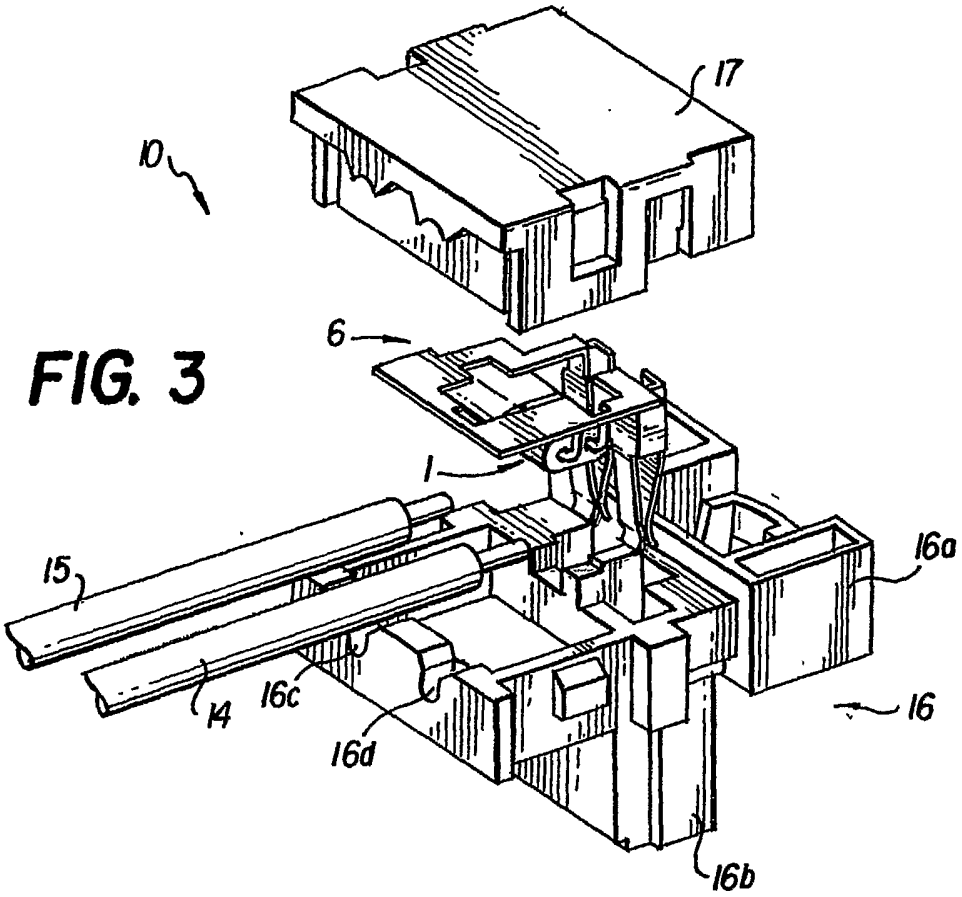
10
17
6
1
15
16a
14
16c
16d
16
16b

FIG. 3

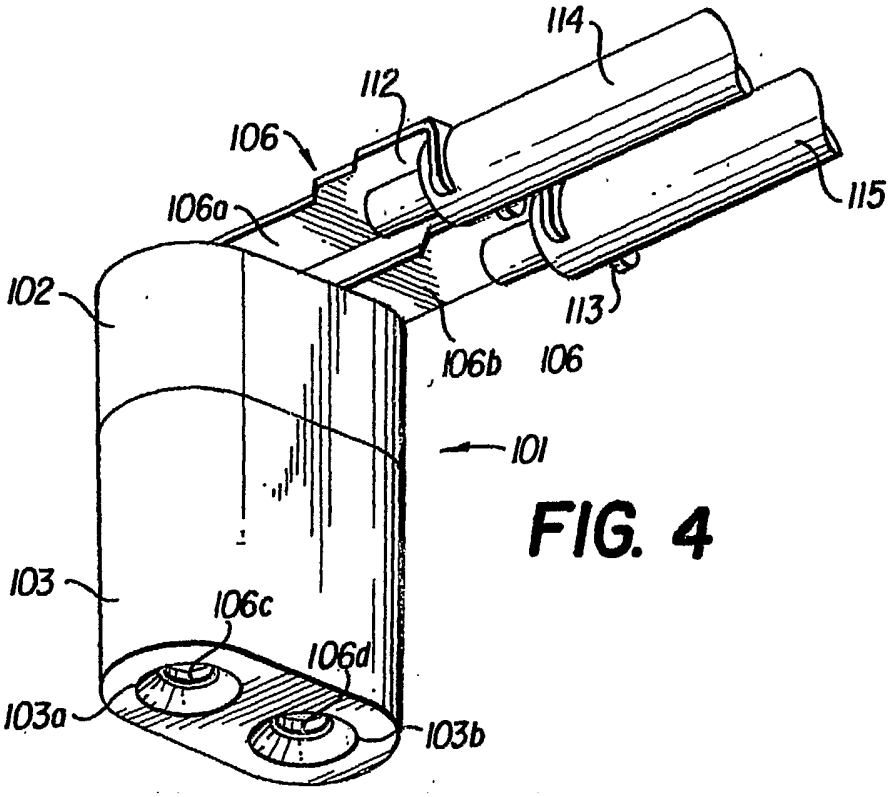
114
112
106
106a
115
102
113
106b
106
101
103
106c
106d
103a
103b

FIG. 4

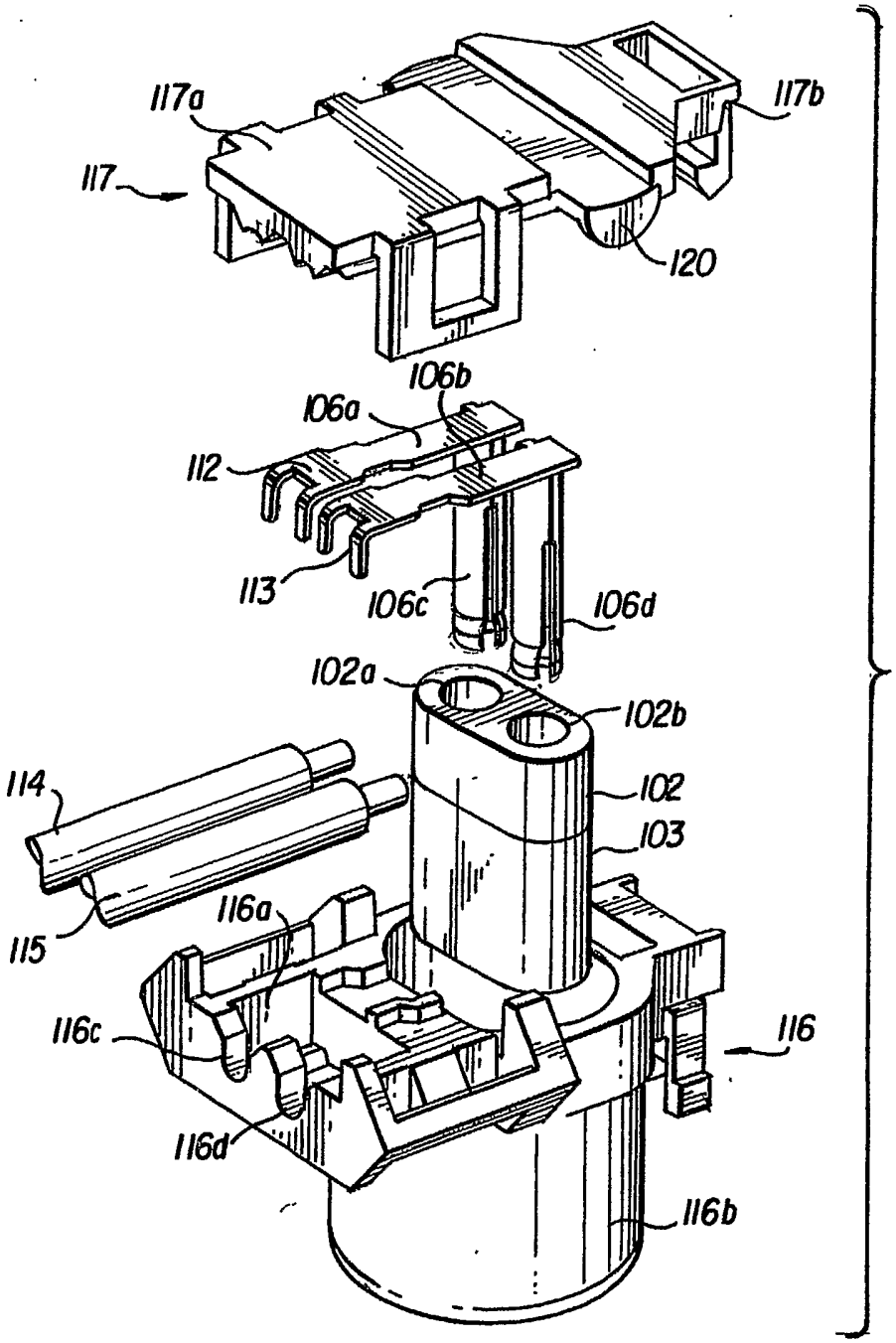
117a
117b
117
120
106b
106a
112
113
106c
106d
102a
102b
114
102
103
116a
115
116c
116
116d
116b

FIG. 5

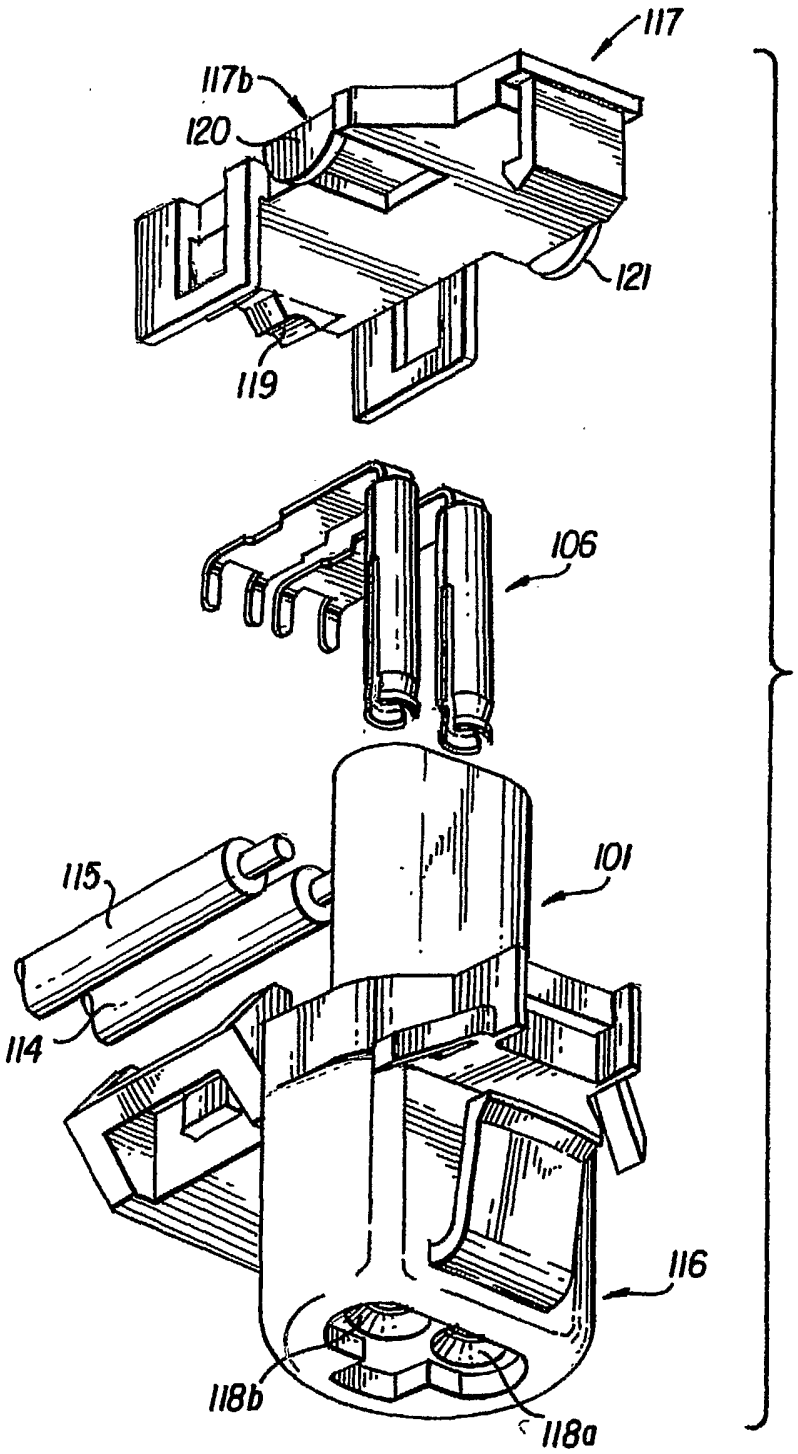

FIG. 6

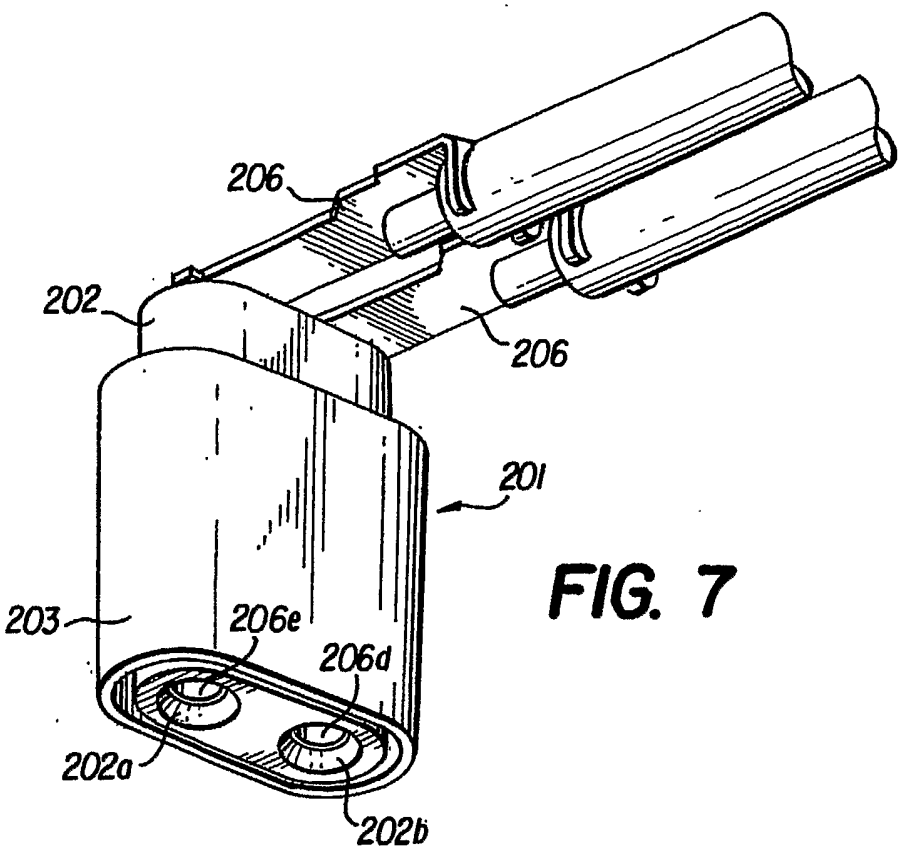
206
202
206
201
203
206e
206d
202a
202b

FIG. 7

FIG. 9

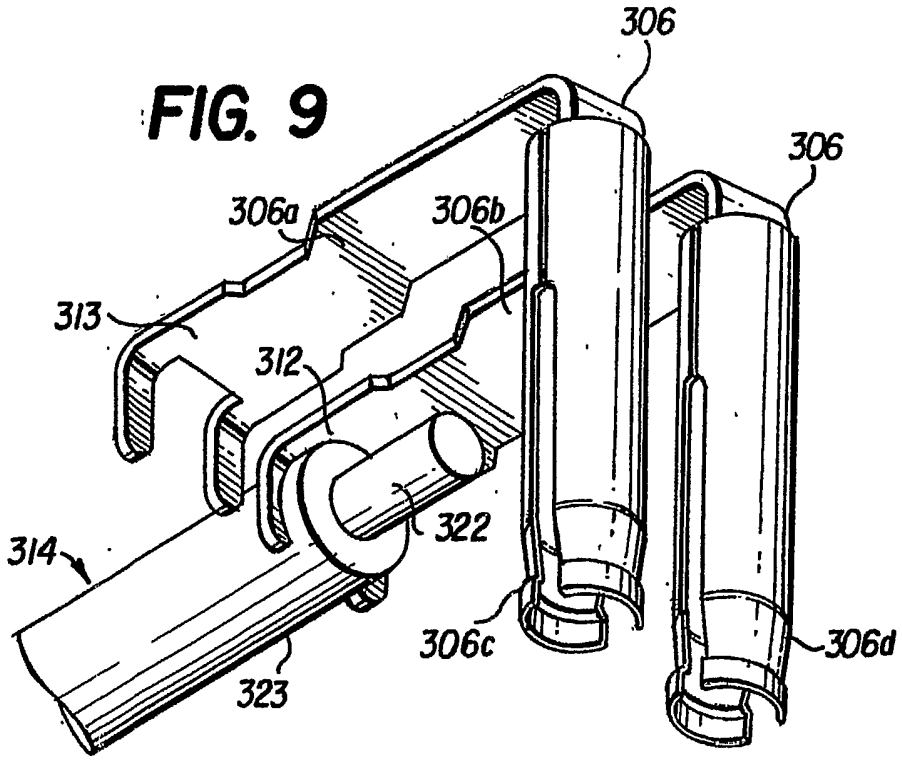
306
306
306a
306b
313
312
322
314
323
306c
306d

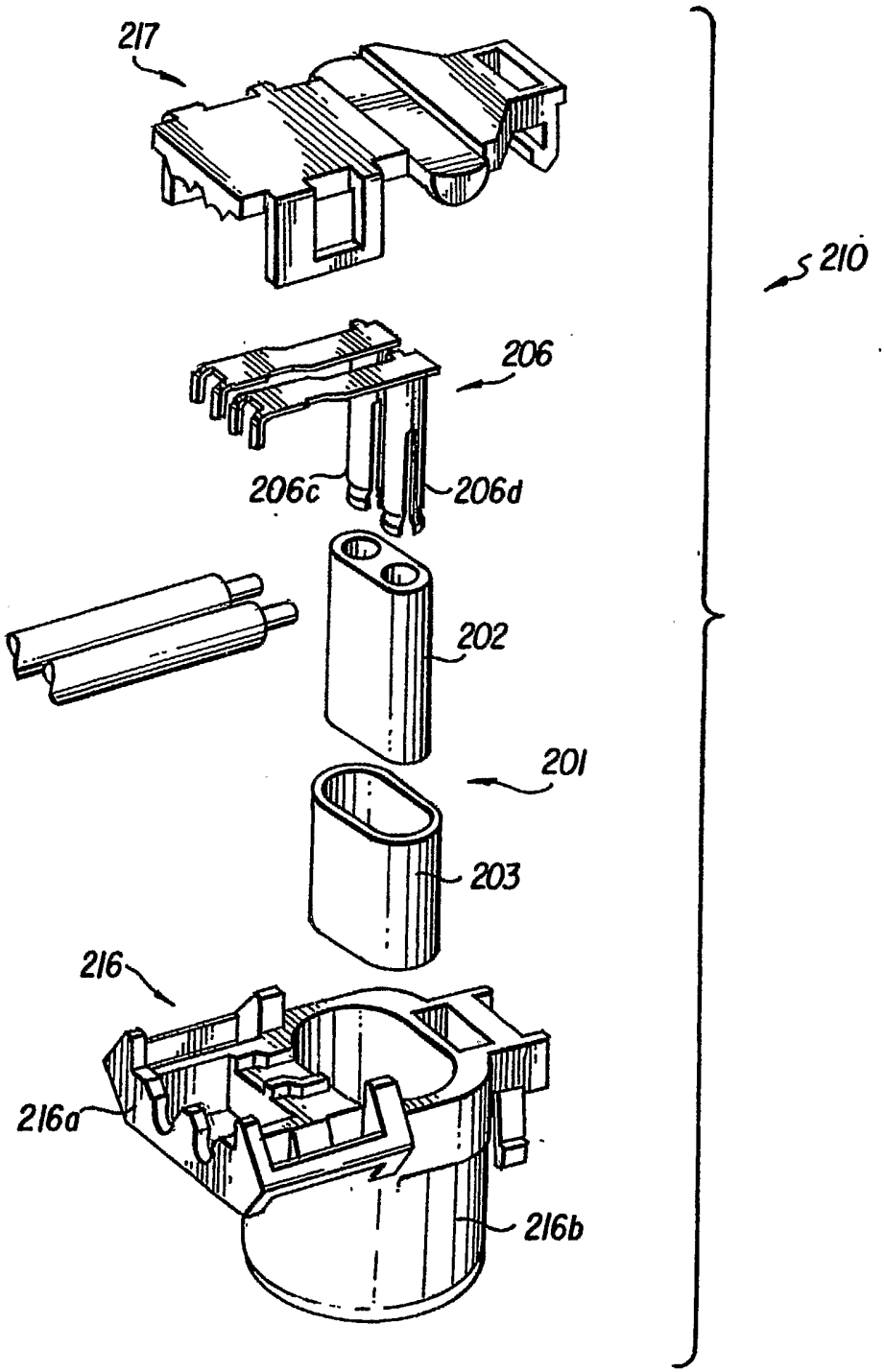

FIG. 8

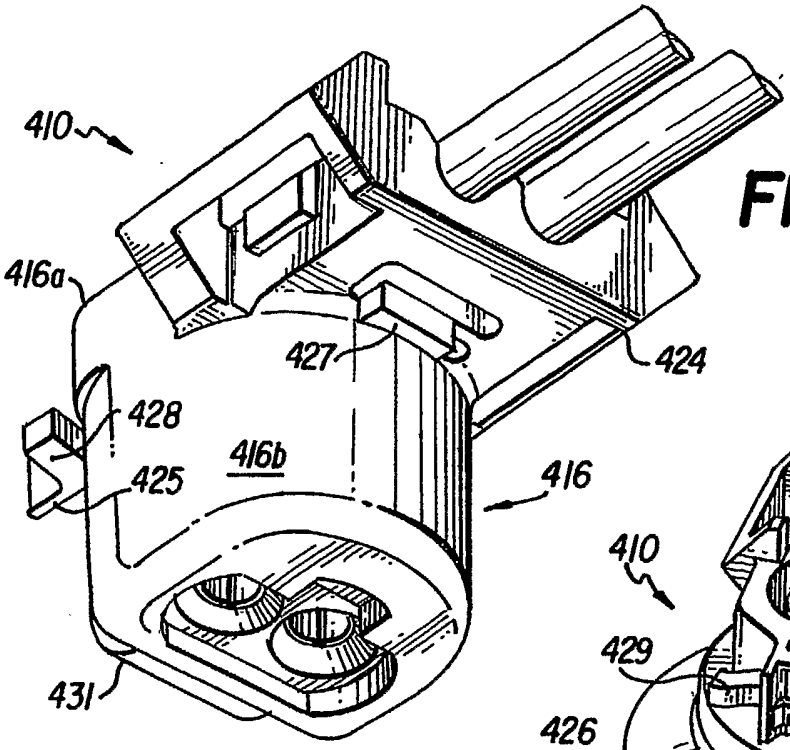

FIG. 10

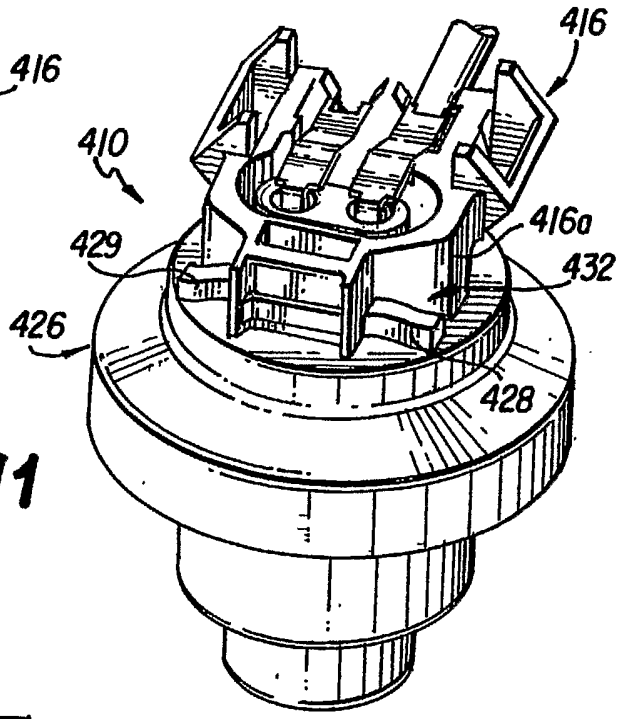

FIG. 11

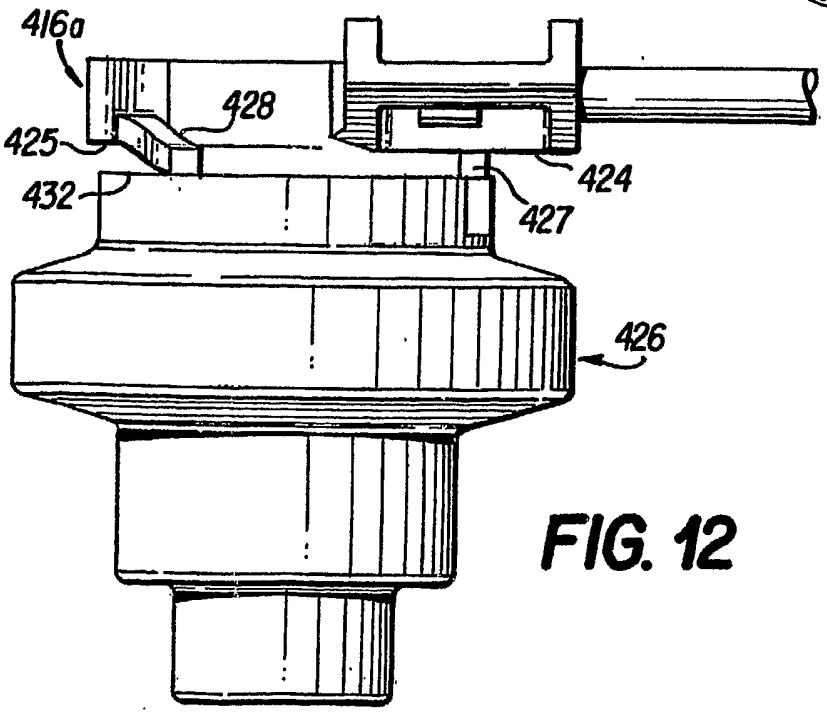

FIG. 12

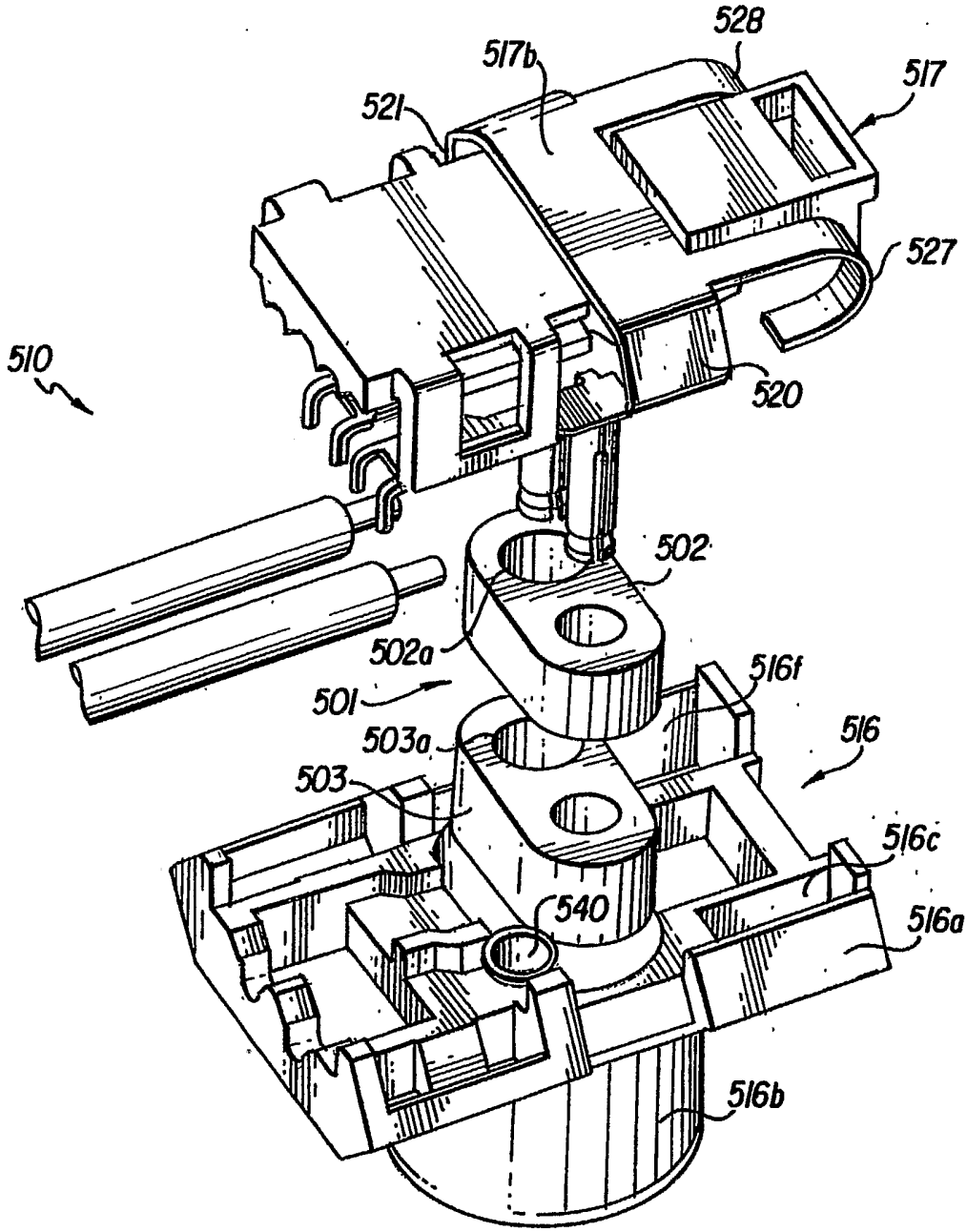
528
517b
517
521
527
510
520
502
502a
516f
501
503a
516
503
516c
540
516a
516b

FIG. 13

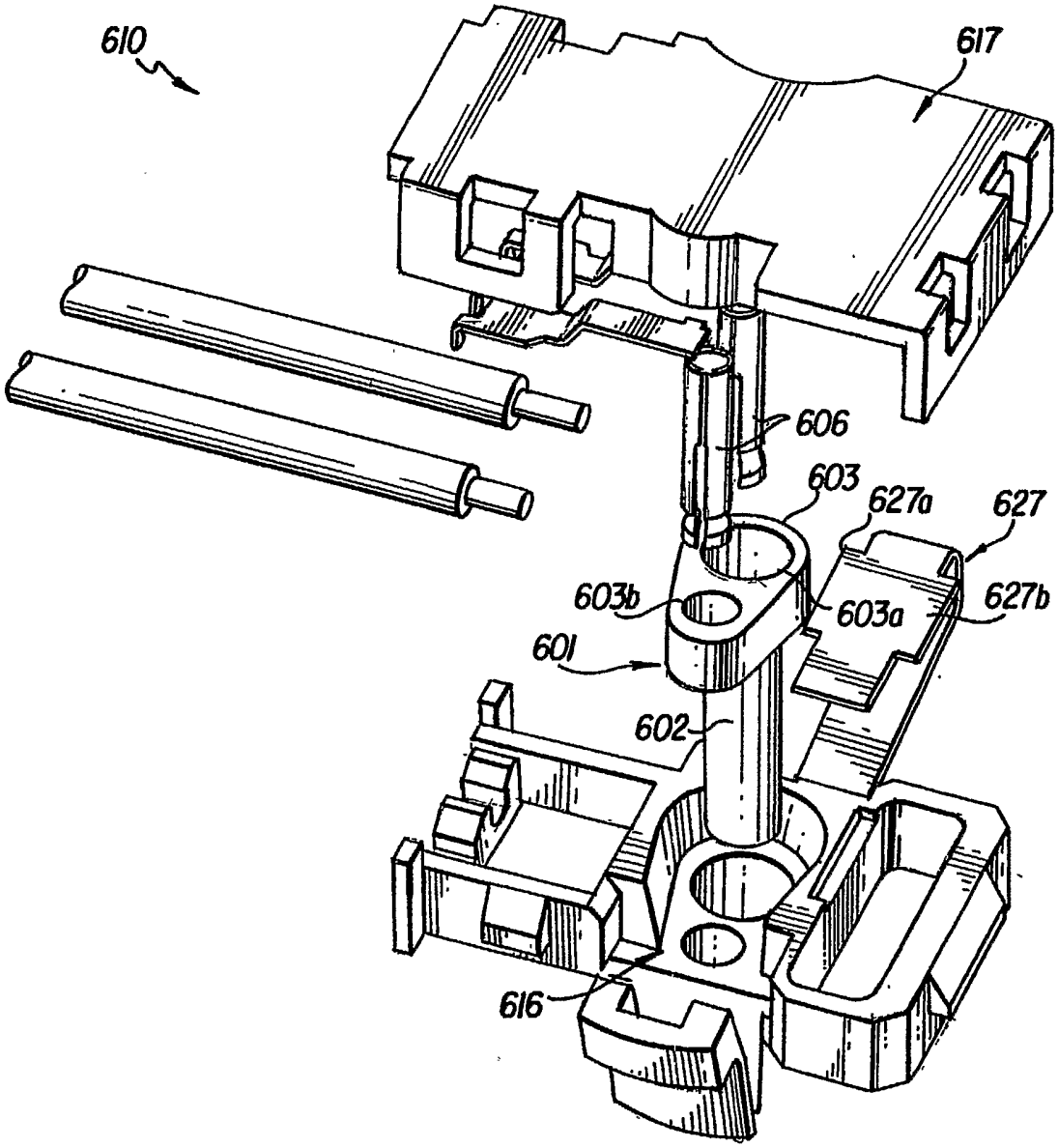

FIG. 14

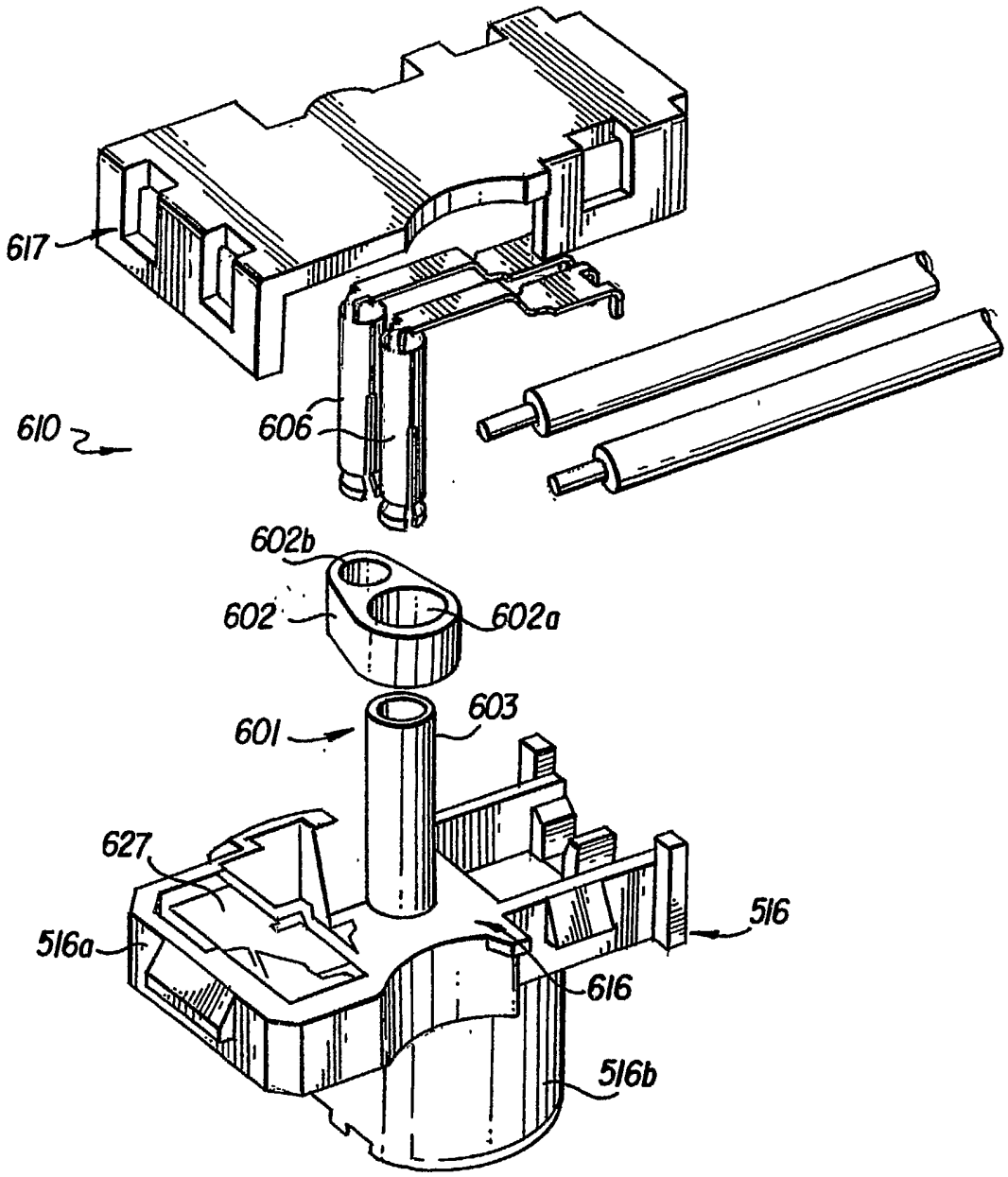

FIG. 15

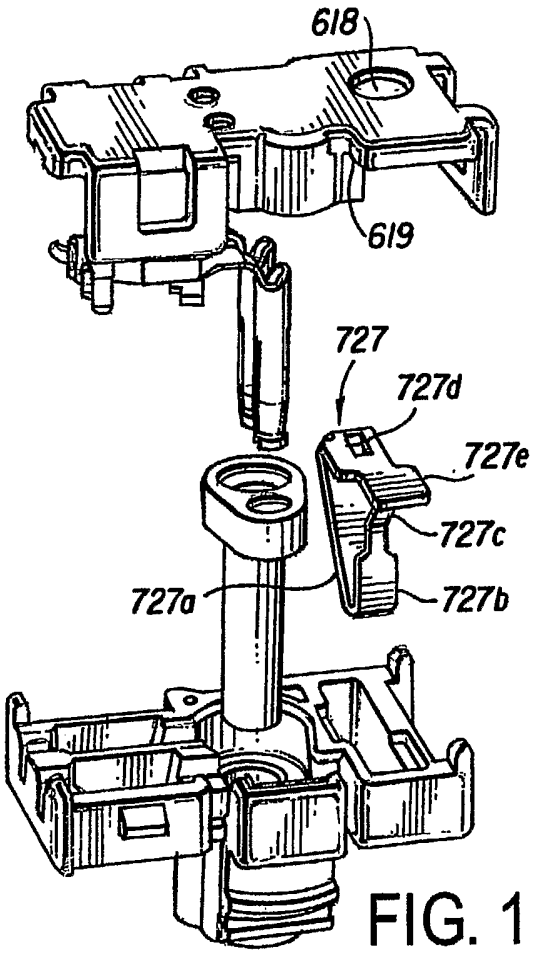
618
619
727
727d
727e
727c
727a
727b

FIG. 16

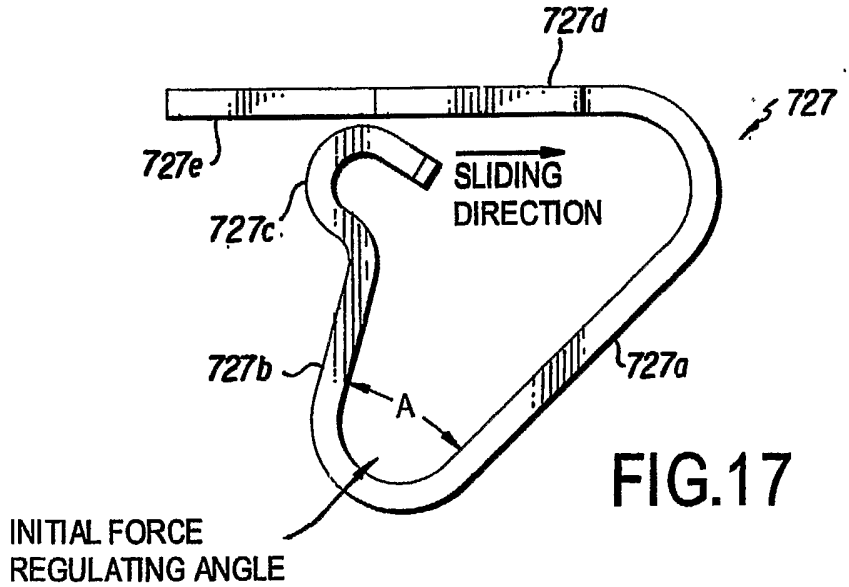
727d
727
727e
SLIDING
DIRECTION
727c
727b
727a
A
INITIAL FORCE
REGULATING ANGLE

FIG.17

INTERNATIONAL SEARCH REPORT

International application No.
PCT/US05/00323

A. CLASSIFICATION OF SUBJECT MATTER
IPC(7) : H01R 13/627
US CL : 439/350
According to International Patent Classification (IPC) or to both national classification and IPC

B. FIELDS SEARCHED

Minimum documentation searched (classification system followed by classification symbols)
U.S. : 439/350,352,489,923,489,357

Documentation searched other than minimum documentation to the extent that such documents are included in the fields searched
NONE

Electronic data base consulted during the international search (name of data base and, where practicable, search terms used)
Please See Continuation Sheet

C. DOCUMENTS CONSIDERED TO BE RELEVANT

Category *	Citation of document, with indication, where appropriate, of the relevant passages	Relevant to claim No.
X	US 6,497,585 B1 (TORII) 24 December 2002 (24.12.2002), see entire document.	1-6
A	US 5,647,757 A (CHRYSOSTOMOU) 15 July 1997 (15.07.1997), see entire document.	1-7

☐ Further documents are listed in the continuation of Box C. ☐ See patent family annex.

* Special categories of cited documents:

"A" document defining the general state of the art which is not considered to be of particular relevance

"E" earlier application or patent published on or after the international filing date

"L" document which may throw doubts on priority claim(s) or which is cited to establish the publication date of another citation or other special reason (as specified)

"O" document referring to an oral disclosure, use, exhibition or other means

"P" document published prior to the international filing date but later than the priority date claimed

"T" later document published after the international filing date or priority date and not in conflict with the application but cited to understand the principle or theory underlying the invention

"X" document of particular relevance; the claimed invention cannot be considered novel or cannot be considered to involve an inventive step when the document is taken alone

"Y" document of particular relevance; the claimed invention cannot be considered to involve an inventive step when the document is combined with one or more other such documents, such combination being obvious to a person skilled in the art

"&" document member of the same patent family

Date of the actual completion of the international search
27 April 2005 (27.04.2005)

Date of mailing of the international search report
04 MAY 2005

Name and mailing address of the ISA/US
Mail Stop PCT, Attn: ISA/US
Commissioner for Patents
P.O. Box 1450
Alexandria, Virginia 22313-1450
Facsimile No. (703) 305-3230

Authorized officer
JOSE DEES Shawn S. Hoppe

Telephone No. 571-272-1569

Form PCT/ISA/210 (second sheet) (January 2004)

INTERNATIONAL SEARCH REPORT

International application No.
PCT/US05/00323

Continuation of B. FIELDS SEARCHED Item 3:
USPGPUB, USPAT, EPO, JPO, DERWENT, IBM_TDB search terms: (electrical near connector) and ((window or opening) with view$4), 11 and (spring near arm)