Feb. 13, 1934. O. P. PETERS 1,947,139

SNAP-OUT FORM AND METHOD OF MANUFACTURING THE SAME

Filed Oct. 15, 1932 3 Sheets-Sheet 1

Fig. 1.

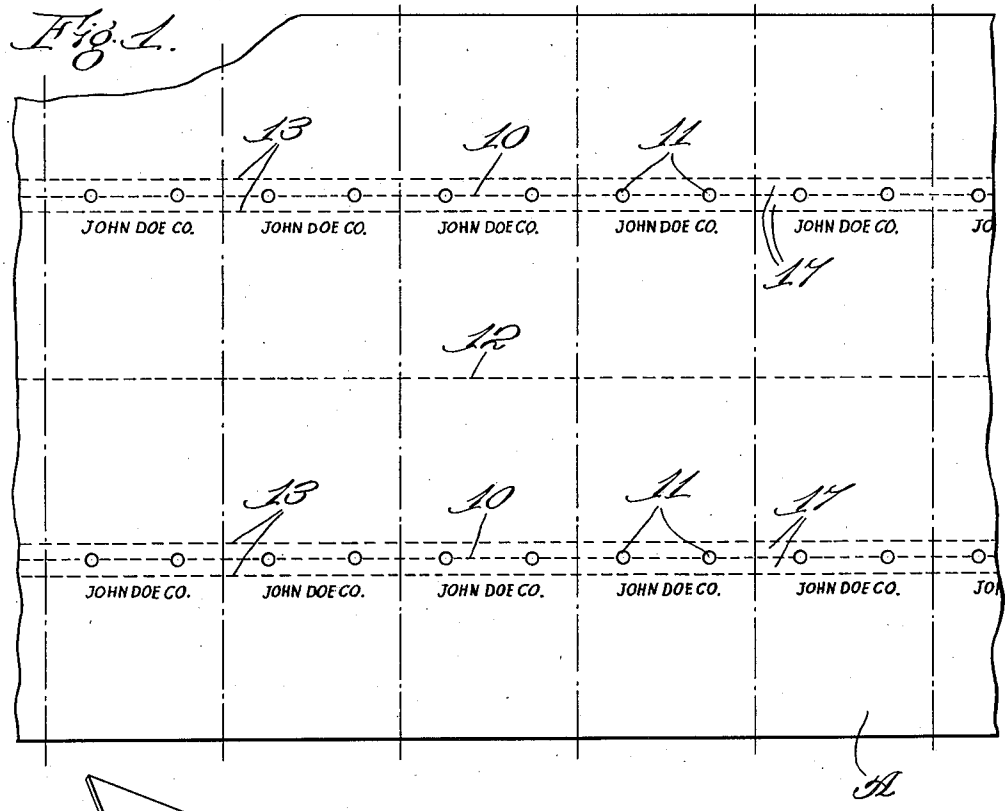

Fig. 2.

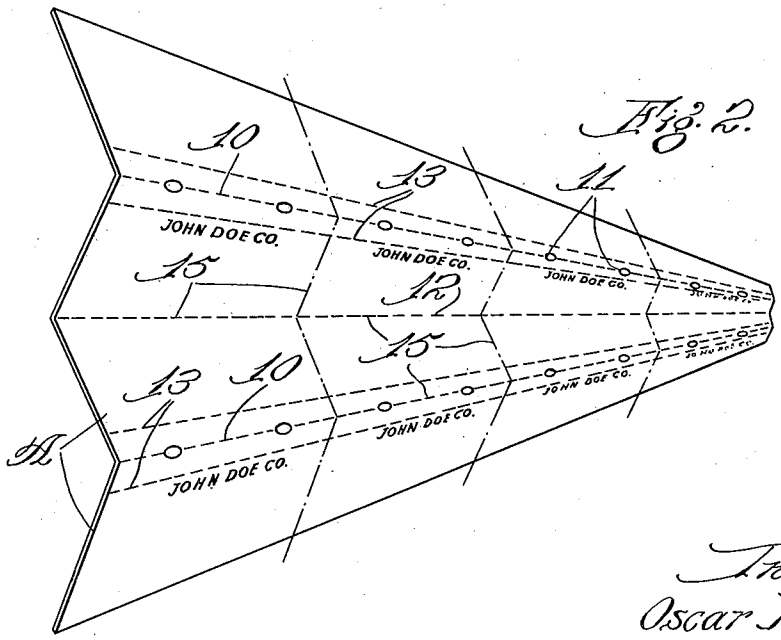

Inventor:
Oscar P. Peters.
By Dyrenforth, Lee, Chritton & Wiles.
Att'ys.

Feb. 13, 1934. O. P. PETERS 1,947,139

SNAP-OUT FORM AND METHOD OF MANUFACTURING THE SAME

Filed Oct. 15, 1932 3 Sheets-Sheet 2

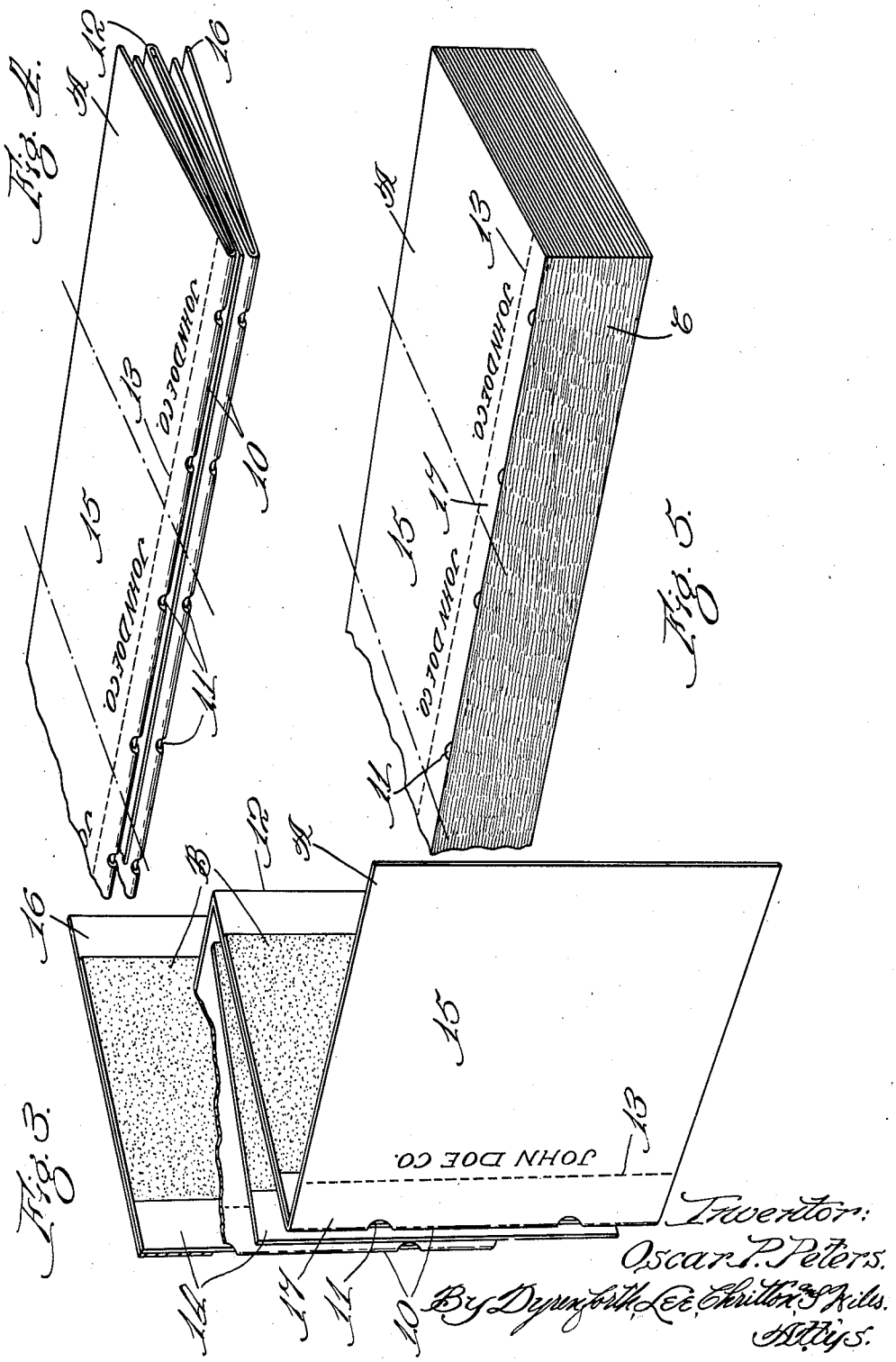

Inventor:
Oscar P. Peters.
By Dyrenforth, Lee, Chritton & Wiles.
Attys.

Feb. 13, 1934. O. P. PETERS 1,947,139

SNAP-OUT FORM AND METHOD OF MANUFACTURING THE SAME

Filed Oct. 15, 1932 3 Sheets-Sheet 3

Fig. 6.

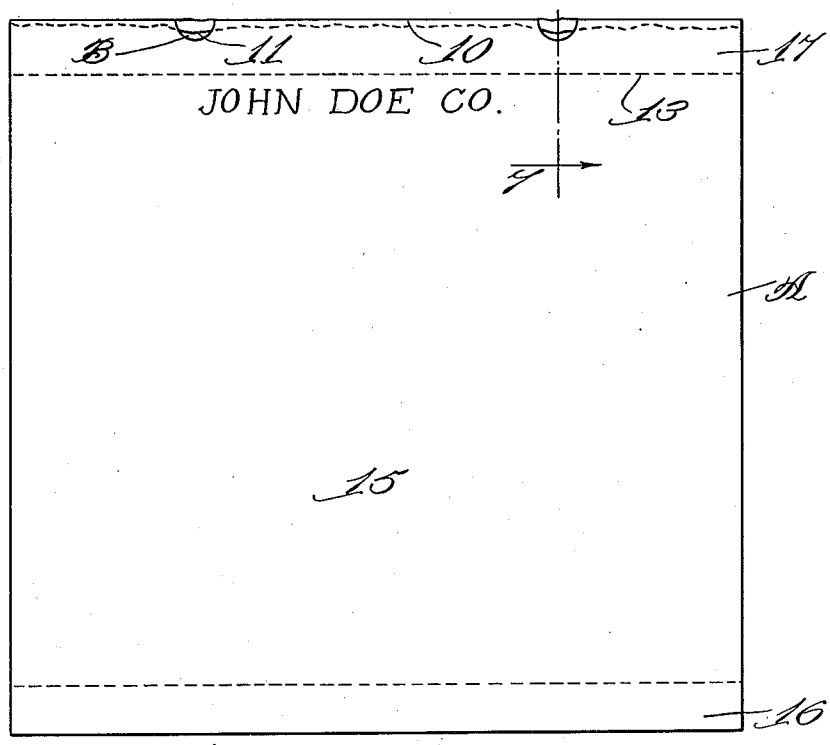

Fig. 7.

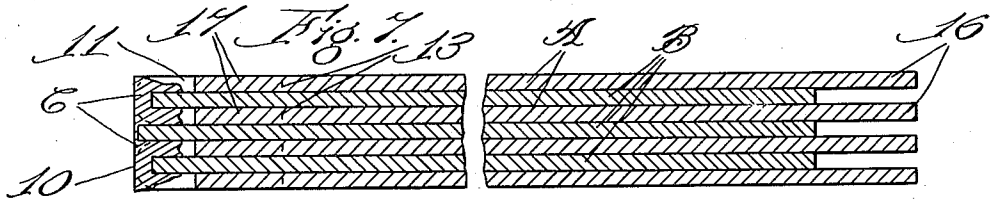

Fig. 8.

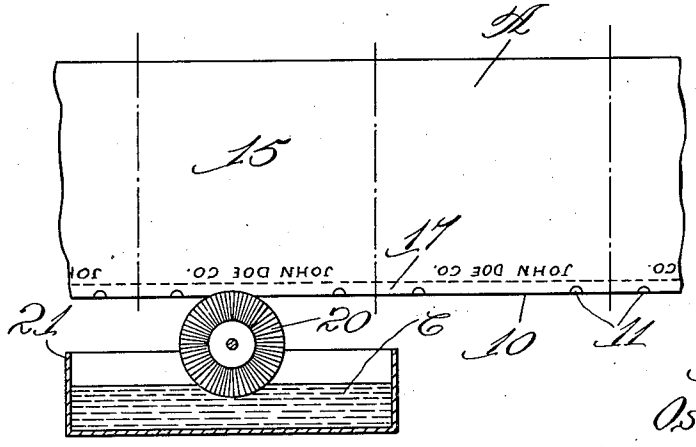

Inventor:
Oscar P. Peters.
By Dyrenforth Lee Chritton and Kiles.
Attys.

Patented Feb. 13, 1934 1,947,139

UNITED STATES PATENT OFFICE

1,947,139

SNAP-OUT FORM AND METHOD OF MANUFACTURING THE SAME

Oscar P. Peters, Cleveland, Ohio, assignor to United Autographic Register Co., Chicago, Ill., a corporation of Illinois

Application October 15, 1932. Serial No. 638,021

10 Claims. (Cl. 281—21)

This invention relates particularly to manifold sets of forms interleaved with carbon-slips, and to a method of manufacturing the same.

The record-slips are provided at one edge with detachable binding-strips which are secured to the corresponding margins of the interleaved transfer-slips (carbons). The transfer-slips are relatively short, so that the free margins of the record-slips may be gripped at the edge opposite the bound edge. Thus, the user may grip the bound margins with one hand and the free margins of the record-slips with the other, and "snap-out" the set of transfer-slips, the binding-strips being at the same time detached from the main portions of the record-slips.

The primary object of the present invention is to provide an improved product of the character mentioned and an improved method of manufacture. The improved product has the margins of the slips bound together in such manner as to avoid undue bulkiness and stiffness at the bound edge.

A further object of the invention is to make the sets of forms from continuous-form fanfold stationery which is provided at its lines of folding with cut-out portions so that adhesive may reach the interleaved carbons therethrough and hold the same without resorting to the use of staples or other fastening means.

The invention is illustrated in a preferred embodiment in the accompanying drawings, in which—

Figure 1 is a broken plan view of a printed and perforated web prior to its being fanfolded; Fig. 2, a broken perspective view of a unit comprising several sets of forms, partially fanfolded; Fig. 3, a broken perspective view of the same after carbon-strips have been introduced; Fig. 4, a broken perspective view of a unit prior to the application of adhesive along its binding edge; Fig. 5, a broken perspective view of a stack of units after the application of adhesive material; Fig. 6, a plan view of a finished set of forms; Fig. 7, a broken sectional view, taken as indicated at line 7 of Fig. 6; and Fig. 8, a diagrammatic view showing a modified way of applying the adhesive in a continuous process.

In the embodiment illustrated, A designates a web of continuous-form stationery; B, carbon-strips which are adapted to be interleaved between the folds of the stationery after being fanfolded; and C, glue or other adhesive used to bind the edges of the set.

The web A may comprise any desired number of strips (four being shown for the purpose of illustration) which are printed alternatively on opposite sides so that the printed face will be on the upper side after the web has been fanfolded. The web is provided, between the strips, with longitudinal folds, or lines of weakening, to facilitate the fanfolding operation. Those lines which occur at the top portion of the printed form are designated 10 and are provided with adhesive-admitting perforations or cut-out portions 11. The longitudinal line at the bottom portion of the forms is designated 12. Additional parallel lines of weakening 13 are spaced equidistant from the fold of lines 10. Preferably, the printing is done on cylinder printing presses, and the lines 10, 12 and 13 are provided by means of a scoring operation. The apertures 11 may be made by means of punches mounted on the printing rolls, if desired.

As the web A leaves the printing press, it is fanfolded into the form shown in Figs. 2 and 3 in the well-known manner.

The carbon-strips B preferably are provided with an uncarbonized marginal portion 14 which is better adapted to contact the adhesive C. The carbon-strips are of less width than the printed forms, designated generally as 15, so that the lower marginal portions of the latter will project beyond the lower edge of the carbon-strips. This provides each form with a marginal finger grip 16. The carbon-strips may be fed into interleaved relation with the fanfolded web from opposite sides by angular turn-plates or other means (not shown). The carbon strips are so positioned within the web A that they are in superposed relation with their top edge substantially flush with the lines of fold 10. It will be understood that a portion of the uncarbonized area 14 will be exposed through the cut-out portions 11 which were provided in the lines of fold 10. The loaded strip may then be cut into unit lengths comprising any desired number of forms, preferably three or four in number. These units may then be placed in superposed relation and glue or other adhesive applied along the uppermost edge of the unit, as illustrated in Fig. 5. The units are then separated and the lower edges of the forms including the line of fold 12 are trimmed off to free the lower edges of the strip. The unit may then be cut up into individual sets of forms which are ready for use.

In the gluing operation, a certain amount of the adhesive material will enter the perforations 11 and cause the exposed portion of the carbon-strip 14 to adhere to the adjoining record-slips, as best shown in Figs. 6 and 7. A certain amount

of the adhesive may get through the lines of weakening 10 and further assist in holding the carbon-slips. Obviously, the line 10 may comprise a perforate line, in which case the cut-out portions 11 will not be needed.

It will be understood that the record-slips 15 are held in the set by the integrally formed binding 17 which is readily detachable along the line of weakening 13.

In the modification shown in Fig. 8, the adhesive C is applied to the binding edge of the loaded strip, as it leaves the carbon interleaving apparatus, by means of a rotary brush 20 which dips into a glue pan 21. By employing this expedient, the process is made continuous and the strip may be trimmed at one edge and cut into individual sets of forms as soon as the quick-drying glue has had an opportunity to set.

The forms are particularly adapted for use in typewriters, Elliott-Fisher machines, and the like. The binding edge is free from staples and other bulky projections so that it may readily be fed around the platen of a typewriter. As only a small amount of glue is applied to each set of forms, the binding edge is quite flexible.

The foregoing detailed description has been given for clearness of understanding only, and no unnecessary limitations should be understood therefrom, but the appended claims should be construed as broadly as permissible, in view of the prior art.

What I regard as new, and desire to secure by Letters Patent, is:

1. A method of making manifold sets of forms which comprises: forming a web which comprises the record-slips of a set of forms with a line of folding having adhesive-admitting perforations thereat and lines of weakening in said slips parallel with and on opposite sides of the line of folding, thus providing marginal binding-strips; folding the web along the line of folding; introducing a relatively narrow transfer-slip between said record-slips; and applying adhesive at the line of folding and through the adhesive-admitting perforations thereat.

2. A method of making manifold sets of forms which comprises: forming a web which comprises at least four record-slips of a set of forms connected by lines of folding; punching adhesive-admitting perforations in alternate lines of folding, and scoring longitudinal lines of weakening in said slips near and on opposite sides of said alternate lines of folding to form binding-strips; fanfolding the web so that said alternate lines of folding are in superposed relation; introducing relatively short transfer slips between the record-slips; and adhesively connecting the slips at the lines of folding mentioned, the adhesive being partially entered through said adhesive-admitting perforations.

3. The method specified in claim 2, supplemented by trimming the set at the edge opposite that at which the adhesive is applied, thus severing the connected record-slips at the trimmed edge of the set.

4. A method of manufacturing manifold sets of forms which comprises: scoring, punching and fanfolding a web to form connected sets of record-slips of a record set of forms, each set comprising a plurality of superposed record-slips having lines of folding provided with adhesive-admitting perforations and having lines of weakening parallel with said lines of folding, thereby affording binding-strips; introducing transfer-strips between the strips of the fanfolded web; and applying adhesive at the lines of folding having said adhesive-admitting perforations.

5. The method specified in claim 4, characterized by bringing at least two lines of folding in superposed relation.

6. A method of manufacturing manifold sets of forms which comprises: scoring a web to provide weakened lines of folding having adhesive-admitting perforations and forming in the web lines of weakening parallel and on opposite sides of alternate lines of folding, thus providing binding margins, fanfolding the web and bringing at least two of said lines of folding into superposed relation, the folded web affording connected sets of record-slips, each set comprising a plurality of record-slips in superposed relation; introducing transfer strips between the strips which comprise the record-slips; and applying adhesive at the lines of folding provided with adhesive-admitting perforations.

7. The method specified in claim 6, supplemented by the step of dividing the fanfolded web and interleaved transfer-strips into units, each unit comprising several connected sets; and placing said units in superposed relation before applying the adhesive.

8. A manifold set of forms comprising: a plurality of superposed record-slips having superposed detachable binding-strips at one edge of the form, certain of said binding-strips being connected by a line of folding having cut-out portions opening at said edge; and a transfer-slip interleaved with said record-slips and secured in position by adhesive extending through the cut-out portions of the record-slips.

9. A manifold form comprising superposed record-slips and interleaved transfer-slips, said slips being held in position by adhesive applied to one of their edge-portions, and certain of adjacent record-slips being interconnected and folded along the connecting edge, said folded edge having cut-out portions to expose a portion of the enclosed transfer-slip to contact with said adhesive.

10. A manifold form comprising integrally formed record-slips having a line of weakening between slips and being folded into superposed relation along said line, said slips being provided with additional parallel lines of weakening near the fold which provide superposed detachable parallel binding-strips adjacent to the fold, and said binding-strips having cut-out portions extending through said folded edge; and a carbon-slip interleaved between said record-slips and secured by adhesive entering through said cut-out portions and the line of weakening in the connecting fold, the edge of said carbon opposite its connected edge being spaced inwardly from the edges of the record-slips.

OSCAR P. PETERS.