May 18, 1937. F. C. KILB ET AL 2,081,107

VENTILATING APPARATUS

Filed Jan. 15, 1936 2 Sheets-Sheet 1

Fig. 1

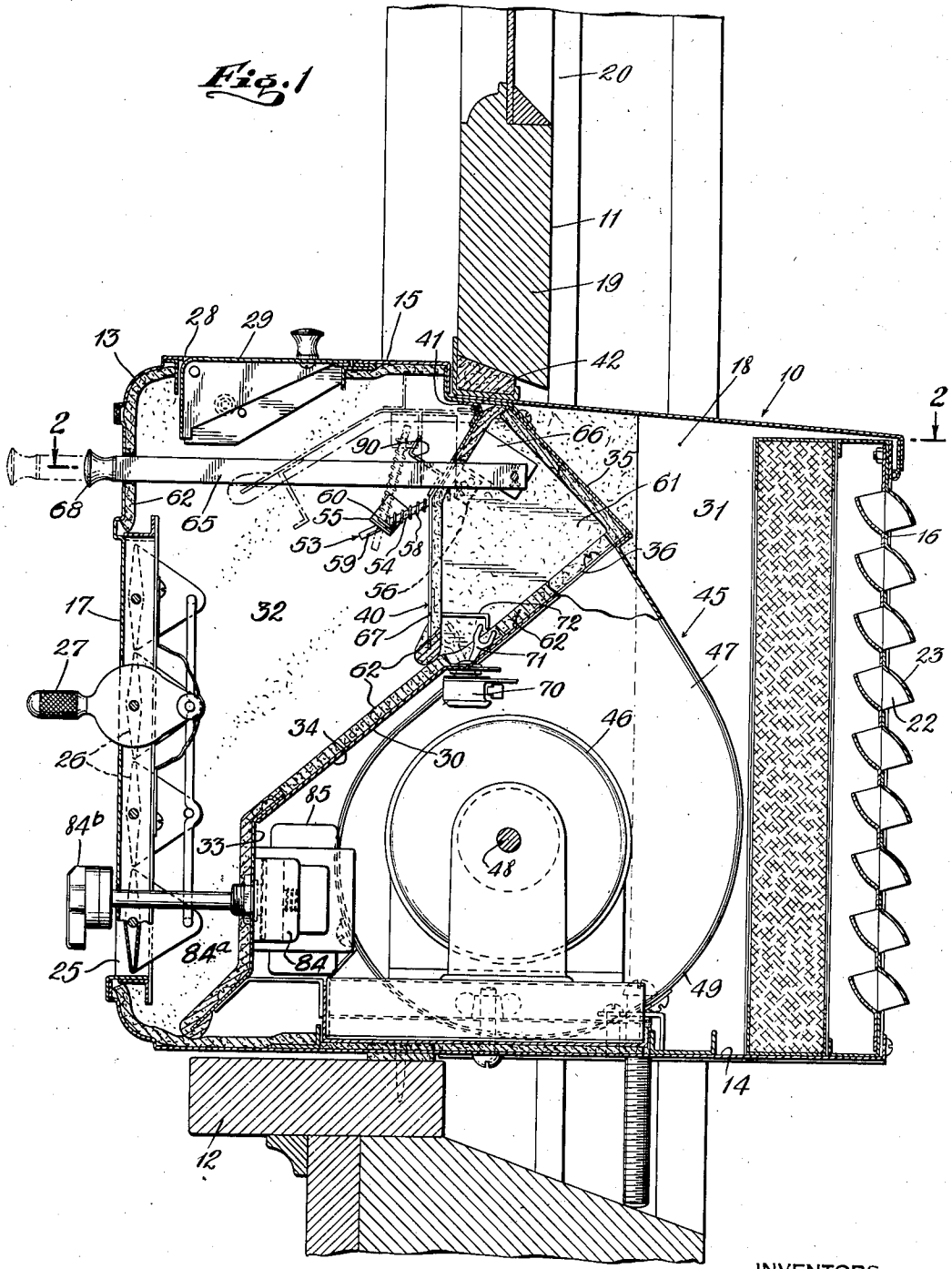

INVENTORS
FRANCIS C. KILB and
HENRY S. WOODRUFF
BY
their ATTORNEY

May 18, 1937. F. C. KILB ET AL 2,081,107

VENTILATING APPARATUS

Filed Jan. 15, 1936 2 Sheets-Sheet 2

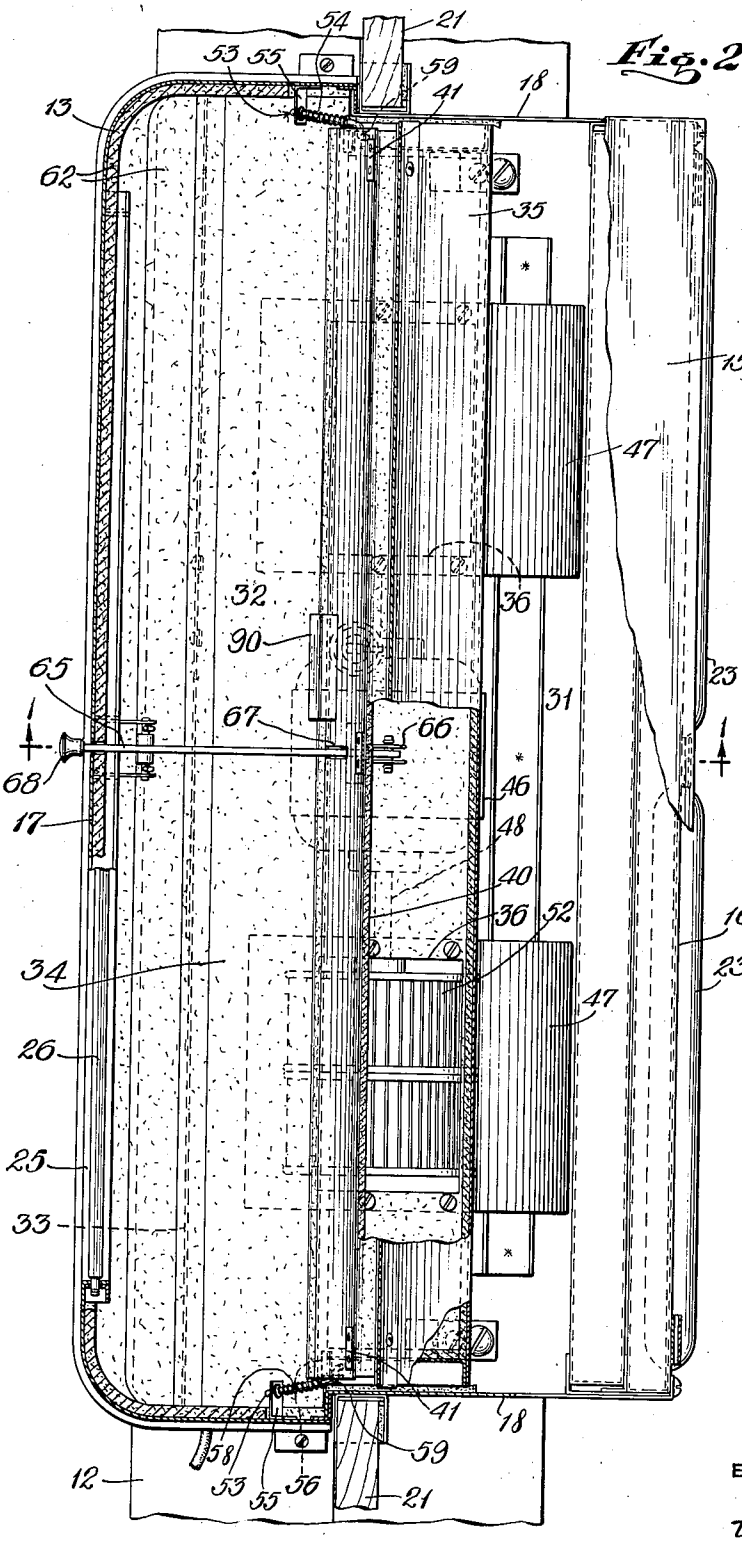

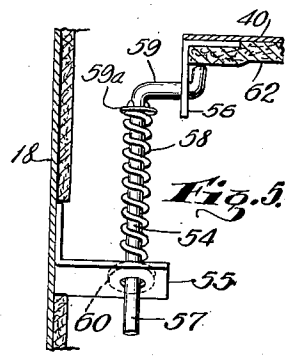

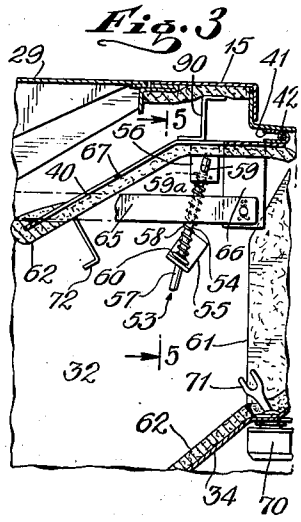

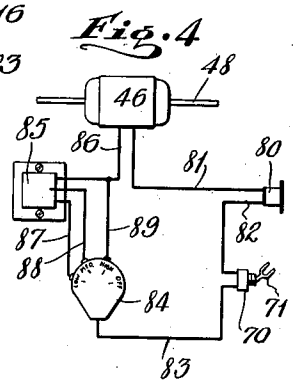

INVENTORS
FRANCIS C. KILB and
HENRY S. WOODRUFF
BY
Their ATTORNEY

Patented May 18, 1937

2,081,107

UNITED STATES PATENT OFFICE

2,081,107

VENTILATING APPARATUS

Francis C. Kilb and Henry S. Woodruff, Larchmont, N. Y., assignors to American Radiator Company, New York, N. Y., a corporation of New Jersey

Application January 15, 1936, Serial No. 59,200

9 Claims. (Cl. 98—94)

Our invention relates to ventilating apparatus and more particularly to the type used for changing the fresh air conditions in room spaces.

It is to be noted that, while we have disclosed as a preferred embodiment of our invention, novel ventilating apparatus of the unit type adapted to be installed in window openings, our invention in certain of its broader aspects is not to be considered as limited to this particular type of apparatus, for certain of the novel features may be embodied in other types of ventilating apparatus.

The objects of our invention are comprised in the provision of ventilating apparatus which is of improved construction and arrangement of parts; in the provision of ventilating apparatus which is provided with an improved form of damper for controlling the flow of air between the room space and the atmosphere, and an improved means for operating the damper; in the provision of ventilating apparatus which is provided with an improved form of control for the motor-driven fan in the apparatus, so that the motor is always shut off when the damper is closed; and in the provision of a damper operating means providing a visual indication of the position of the damper from the exterior of the apparatus.

The invention consists in the novel construction and combination of parts, to be more fully described hereinafter, and the novelty of which will be particularly pointed out and distinctly claimed.

In the accompanying drawings, to be taken as a part of this specification, we have fully and clearly illustrated a preferred embodiment of our invention, in which drawings—

Fig. 1 is a vertical transverse sectional view through a window ventilator unit constructed in accordance with the present invention, and showing the unit as installed in the opening defined by a partially raised window sash and the window sill of a conventional form of window.

Fig. 2 is a horizontal plan section taken on the broken line 2—2 of Fig. 1;

Fig. 3 is a fragmentary vertical section showing certain parts which appear in Fig. 1 as being in a different adjusted position;

Fig. 4 is an electrical diagram illustrating the operating control for the motor-driven fan; and

Fig. 5 is a fragmentary sectional view taken on the line 5—5 of Fig. 3.

Referring now in detail to the accompanying drawings, we have illustrated our invention in one preferred form as incorporated in a window ventilator 10 adapted to be arranged centrally of and longitudinally across an opening defined by a partially raised window sash 11 and a window sill 12.

The ventilator comprises a casing 13 having a bottom wall 14, a top wall 15, a rear wall 16, a front wall 17 and end walls 18. The bottom wall is supported by the window sill 12 and the top wall of the casing has a sealing engagement with the lower rail 19 of the window sash 11, the latter being slidably mounted in vertically disposed window jambs 20. The space between the end walls 18 of the ventilator and the window jambs 20 may be suitably filled by blocks 21.

The rear wall 16 of the casing is provided with an inlet opening 22 having suitable stationary louvers 23 mounted therein for permitting the entrance of air from the outside atmosphere and at the same time preventing rain and snow from entering the casing. The front wall 17 of the casing is provided with louver-controlled outlet openings 25, the louvers 26 in the openings 25 being moved in unison by a lever 27 to direct the air to different portions of the room and to close the outlet opening, as desired. The top wall 15 is provided at the room side with an additional outlet opening 28 having an adjustable louver 29 mounted therein which serves to close said outlet opening in one position and to direct the air upwardly and toward the window sash in another position.

The casing 13 is divided longitudinally by a partition 30 into an inlet chamber 31 and an outlet chamber 32. The partition comprises three principal parts, viz: a lower portion 33 having a sealing engagement at its lower edge with the bottom wall 14 of the casing, a midportion 34 extending diagonally upward and rearward from the top of the lower portion 33, and a top portion 35 extending diagonally upward and forward from the upper edge of the midportion 34, and having a sealing engagement at its upper longitudinal edge with the top wall 15.

The midportion 34 is provided at its upper end with a pair of air openings 36 symmetrically disposed with respect to a transverse median plane through the casing. The openings 36 serve to connect the inlet and outlet chambers 31 and 32, respectively. As shown in Fig. 1, the top portion 35 of the partition overhangs the upper part of the midportion 34 and defines therewith a portion of an air passage connecting the inlet opening 22 with the outlet openings 25 and 28.

A damper 40 extends longitudinally of the casing and is pivotally connected at its upper end to the top wall 15 of the casing by means of a hinge 41, the hinge pin 42 being arranged horizontally and extending longitudinally of the casing, as shown in Fig. 1. The damper is shown in full lines in Fig. 1 as being in its fully closed position where it prevents the passage of air between the chambers 31 and 32, and is shown in dotted lines as being in its fully open position where it serves as a portion of the defining wall structure of the air passage through the casing. In the full open position of the damper, a stop plate 90 carried by the forward face thereof, engages the top wall 15.

Means is provided for effecting a positive flow of air through the casing from the inlet opening 22 through the inlet and outlet chambers 31 and 32 and through the outlet openings 25 and 28 into the room. This means is here shown to be in the form of a motor-driven blower unit 45 comprising a motor 46 and a pair of fans or blowers 47 operatively connected thereto.

The motor 46 is arranged centrally of the casing and includes a shaft 48 extending out of both ends of the motor housing and longitudinally of the casing. The blowers 47 are arranged symmetrically at opposite sides of the motor and beneath the openings 36, respectively.

Each blower comprises a scroll-shaped housing 49 having inlet openings in its side communicating with the inlet chamber 31 and an outlet opening communicating with an opening 36 in the midportion 34 of the partition. Each blower 47 also comprises a rotor 52 which is arranged within its housing 49 and is fixed to the adjacent outer end of the motor shaft 48.

In accordance with the present invention, we provide an improved means for holding the damper firmly in its fully closed position and for holding the damper in its fully open position against the action of gravity. This means is in the form of an over-center toggle device 53 comprising an expansible spring link 54 pivotally connected at one end to a bracket 55 which is fixed to an end wall 18 of the casing, and pivotally connected at its other end to a bracket 56 which is fixed to the end of the damper at points spaced from the hinge pin 42.

The expansible spring link 54 comprises a guide pin 57 and an expansible spring 58 encircling the pin 57. The pin 57 is provided at one end with an offset portion 59 which is pivotally mounted in an opening provided in the bracket 56, and the opposite end of the pin loosely and slidably fits an opening provided in the bracket 54. The spring 58 encircles the pin 57 and engages at one end an abutment collar 59a encircling and fixed to the pin adjacent the offset portion 59, and the spring 58 is provided at its other end with an abutment collar 60 loosely encircling the pin 57 and engaging the bracket 55, so as to prevent the spring from passing through the opening in the bracket 55.

The construction just described is in effect a toggle, one link of the toggle being the expansible spring link just described, and the other link of the toggle being that portion of the damper which lies between the bracket 56 and the hinge pin 42. The operation of this construction is such that the spring 58 reaches its point of greatest contraction when the damper occupies a midposition, with the spring link and the damper lying in a substantially straight line. When the damper is moved past this midposition and towards its open position, the spring 58 acts to urge the damper towards such open position and hold it there against the force of gravity. When the damper is moved past its midposition towards the closed position, the spring acts to urge the damper towards this latter position and firmly hold the damper closed.

An over-center toggle device 53 is provided at each end of the damper. The damper is of less length than the distance between the end walls 18 at the forward part of the casing and the over-center toggle devices 53 occupy the spaces between the ends of the damper and the end walls 18. End members 61 are provided for closing the ends of the spaces defined by the overhanging top portion 35 of the partition and the upper part of the midportion 34 of the partition. The ends of the damper engage the end members 61 and the bottom longitudinal edge of the damper engages the midportion 34 of the partition to effect a tight closure and thereby prevent the passage of air between the inlet and outlet openings of the casing. The interior of the outlet chamber, including the rear face of the damper 40, is lined with sound deadening material indicated at 62. The closure effected by the damper is better and more positive due to the engagement of the soft sound deadening material 62 on the edge of the damper with the same kind of material on the partition.

The damper 40 is moved to its open and closed position by means of a pull-rod 65, which is pivotally connected at one end to a bracket 66 fixed to the rear face of the damper 40 and extends through a slot 67 provided in the damper and through the front wall 17 of the casing. A knob 68 is provided on the outer end of the pull-rod and when gripped by the hand may be pulled horizontally outward to open the damper or pushed horizontally inward to close the damper.

We also provide an improved means for assuring that the motor-driven blower 45 will not operate when the damper 40 is closed. This means is in the form of a toggle switch 70 of conventional design having an operating arm 71 extending upwardly from the midportion 34 of the partition and adapted to be operatively engaged by a bracket finger 72 fixed to the rear face of the damper when the damper is moved to and away from closed position. In Fig. 1, the toggle switch is shown in its position when the electrical circuit to the motor is open. It will be appreciated that as the damper is moved away from closed position, the bracket finger 72 will engage the operating member 71 and move the latter towards the left and close the toggle switch 70. The closed position of the toggle switch is shown in Fig. 3.

In Fig. 4 of the drawings, we have shown a wiring diagram illustrating the operation of the toggle switch and the motor. Reference numeral 80 indicates an electrical outlet which may be considered as the source of current. Two leads 81 and 82 are connected to the outlet, the lead 81 leading to the motor 46 and the lead 82 connected to one side of the toggle switch 70. The other side of the toggle switch is connected by a lead 83 to a hand-operated control switch 84. The control switch 84 has four positions, one being an off position and the other three being low, medium and full speed positions, respectively. An inductor 85 is provided which is connected by a lead 86 to the motor 46 and is connected by leads 87 and 88 to the low and medium speed contacts of the switch 84, respectively. The high speed contact of the switch 84 is connected di-

rectly by a lead **89** to the lead **86** and to the motor. The switch **84** is shown in Fig. 1 as being mounted on the rear face of the part **33** of the partition and includes an operating shaft **84***a* extending forwardly through an opening in the front wall **17** of the casing and an operating knob **84***b* at the exterior of the front wall **17**.

It will thus be appreciated that by operation of the hand-controlled switch **84** the motor-driven blower or fan in the casing may be caused to operate at either one of three speeds, or may be shut off entirely by turning its operating handle to the desired position. With the switch **84** at either of its three running positions, the closing of the damper **40** will open the circuit to the motor by reason of the operation of the toggle switch **70**. It will therefore be appreciated that the toggle switch and damper arrangement described will serve as a means for assuring the non-operation of the motor when the damper is closed, even though the operating switch **84** be left at one of the three operating positions.

The pull-rod **65** provides a visual indication, from the exterior of the casing, of the position of the damper **40** and the switch **70**. Thus, when one is leaving a room, a glance at the pull-rod will indicate whether or not the unit is operating. If the pull-rod is extended as indicated in dotted lines in Fig. 1, the damper is open and the motor operating. If the end of the pull rod is against the front wall, as shown in full lines in Fig. 1, the damper is closed and the motor cannot be operating, due to the position of the toggle switch **70**.

What we claim and desire to secure by Letters Patent of the United States is:—

1. Ventilating apparatus for room spaces, comprising a casing including wall structure having at least two spaced openings therein providing communication, respectively, between the interior of the casing and the room space and between the interior of the casing and the outside atmosphere; means providing an air passage extending through said casing and connecting said openings; a damper arranged within said casing between said openings and mounted therein to move about a substantially horizontal axis to open and closed positions for permitting and preventing, respectively, the flow of air through said passage; the damper being arranged in a substantially vertical position when closed and a substantially horizontal position when open; and mechanism for operating said damper, including an expansible spring link pivotally connected at one end to the casing and at its other end to the damper at points spaced from the axis about which the latter moves and operable to reach its stage of greatest contraction when the damper is at a midposition so that the link expands when the damper moves past the midposition in either direction and the damper is held in its open position against the force of gravity and held in its closed position to effect a tight closure.

2. Ventilating apparatus for room spaces, comprising a casing having an inlet opening communicating with said room space and an outlet opening communicating with the outside atmosphere; adjustable louver means in said outlet opening operable in one position to direct air to desired portions of the room space and operable in another position to close said outlet opening; means providing an air passage extending through said casing and connecting said inlet opening and said outlet opening; means providing for the positive flow of air through said passage and including an electric motor and a fan operatively connected to the motor; an electrical circuit providing current for operating said motor; a damper mounted within said casing between said inlet and outlet openings and movable to open and closed positions for permitting and preventing, respectively, the flow of air through said passage; switch means in said circuit actuated by said damper when the latter is moved to closed position to open said electrical circuit and actuated by said damper when the latter is moved away from said closed position to close said circuit; and mechanism for operating said damper including spring means for urging said damper towards its fully open position and its fully closed position when said damper is at and approaching said positions.

3. Ventilating apparatus for room spaces, comprising a casing including wall structure having at least two spaced openings therein; one of said openings providing communication between the interior of the casing and a room space and the other of said openings providing communication between the interior of the casing and the outside atmosphere; means providing an air passage extending through said casing and connecting said openings; means providing for the positive flow of air through said passage and including an electric motor and a fan operatively connected to the motor; an electrical circuit providing current for operating said motor; a damper within said casing and movable to open and closed positions for permitting and preventing, respectively, the flow of air through said passage; switch means in said circuit actuated by said damper when the latter is moved to closed position to open said electrical circuit and actuated by said damper when the latter is moved away from said closed position to close said circuit; and mechanism for operating said damper, including means for urging said damper toward its fully open and its fully closed position when said damper is approaching and at such positions, and a longitudinally movable operating rod connected to said damper and extending exteriorly of the casing and providing a visual indication exteriorly of the casing of the position of the damper and the switch means.

4. Ventilating apparatus for room spaces, comprising a casing including wall structure having at least two spaced openings therein providing communication, respectively, between the interior of the casing and the room space and between the interior of the casing and the outside atmosphere; means providing an air passage extending through said casing and connecting said openings; a damper mounted within said casing between said openings and movable to open and closed positions for permitting and preventing, respectively, the flow of air through said passage; said damper and its mounting being so arranged that the force of gravity acts on said damper to move it to closed position; and mechanism for operating said damper including an over-center spring-pressed toggle device operable to move said damper against the force of gravity to its open position when the damper approaches said position and operable to aid the force of gravity in moving the damper to closed position when the damper approaches said closed position.

5. Ventilating apparatus for room spaces, comprising a casing including wall structure having at least two spaced openings therein providing communication, respectively, between the interior of the casing and the room space and between

the interior of the casing and the outside atmosphere; means providing an air passage extending through said casing and connecting said openings; means providing for the positive flow of air through said passage and including an electric motor and a fan operatively connected to the motor; an electrical circuit providing current for operating said motor; a damper mounted within said casing between said openings and movable to open and closed positions for permitting and preventing, respectively, the flow of air through said passage; said damper and its mounting being so arranged that the force of gravity acts on said damper to move it to closed position; mechanism for operating said damper including an over-center spring-pressed toggle device operable to move said damper against the force of gravity to its open position when the damper approaches said position and operable to aid the force of gravity in moving the damper to closed position when the damper approaches said closed position; and switch means in said electrical circuit actuated by said damper when the latter is moved to closed position to open said electrical circuit and actuated by said damper when the latter is moved away from said closed position to close said circuit.

6. Ventilating apparatus, comprising a casing structure having an inlet opening in one side thereof and an outlet opening in another side thereof; a partition dividing the interior of said casing structure into inlet and outlet chambers communicating respectively with the inlet and outlet openings; said partition having an opening therein connecting said chambers; a motor-blower unit in said inlet chamber arranged to discharge through said opening in the partition; a damper mounted in said outlet chamber and movable about an axis spaced from said partition to open and closed positions; the damper and its mounting being so arranged that the damper, when in open position, defines with said partition a passage for the flow of air through the outlet chamber and the outlet opening, and when in closed position, engages said partition to prevent flow of air through said outlet chamber and said outlet opening; and mechanism for operating said damper, including means for urging said damper towards its open and its closed position when said damper is approaching and at such positions.

7. Ventilating apparatus, comprising a casing structure having an inlet opening in one side thereof and an outlet opening in another side thereof; a partition dividing the interior of said casing structure into inlet and outlet chambers communicating respectively with the inlet and outlet openings; said partition having an opening therein connecting said chambers; a motor-blower unit in said inlet chamber arranged to discharge through said opening in the partition; a damper mounted in said outlet chamber and movable about an axis spaced from said partition to open and closed positions; said damper and its mounting being so arranged that the force of gravity acts on said damper to move it to closed position; said damper and its mounting being also so arranged that the damper, when in open position, defines with the partition a passage for the flow of air through the outlet chamber and the outlet opening, and, when in closed position, engages said partition to prevent flow of air through said outlet chamber and outlet opening; and mechanism for operating said damper including an over-center spring-pressed toggle device operable to move said damper against the force of gravity to its open position when the damper approaches said position and operable to aid the force of gravity in moving the damper to closed position when the damper approaches said closed position.

8. Ventilating apparatus, comprising a casing structure having an inlet opening in one side thereof and an outlet opening in another side thereof; a partition dividing the interior of said casing structure into inlet and outlet chambers communicating respectively with the inlet and outlet openings; said partition having an opening therein connecting said chambers; means providing for the positive flow of air through said passage and including an electric motor and a fan operatively connected to the motor; an electrical circuit providing current for operating said motor; a damper mounted in said outlet chamber and movable about an axis spaced from said partition to open and closed positions; the damper and its mounting being so arranged that the damper, when in open position, defines with said partition a passage for the flow of air through the outlet chamber and the outlet opening, and, when in closed position, engages said partition to prevent flow of air through said outlet chamber and said outlet opening; and mechanism for operating said damper, including means for urging said damper towards its open and its closed position when said damper is approaching and at such positions; and switch means in said electrical circuit actuated by said damper when the latter is moved to closed position to open said electrical circuit and actuated by said damper when the latter is moved away from said closed position to close said circuit.

9. Ventilating apparatus, comprising a casing structure having an inlet opening in one side thereof and an outlet opening in another side thereof; a partition dividing the interior of said casing structure into inlet and outlet chambers communicating respectively with the inlet and outlet openings; said partition having an opening therein connecting said chambers; a motor-blower unit in said inlet chamber arranged to discharge through said opening in the partition; a damper mounted in said outlet chamber and movable about an axis spaced from said partition to open and closed positions; the damper and its mounting being so arranged that the damper, when in open position, defines with said partition a tortuous sound-deadening passage for the flow of air through the outlet chamber and the outlet opening, and, when in closed position, engages along one edge thereof said partition to prevent flow of air through said outlet chamber and said outlet opening; mechanism for operating said damper, including means for urging said damper towards its open and its closed position when said damper is approaching and at such positions; and a lining of relatively soft sound-deadening material for those surfaces of the damper and the partition which form the air passage and for the engaging surfaces of the damper and partition so that, when the damper is in closed position, an air-tight closure is effected.

FRANCIS C. KILB.
HENRY S. WOODRUFF.