April 15, 1958 B. KAZAN 2,831,142

SLOW-WAVE STRUCTURES

Original Filed Oct. 3, 1951

FIG. 1

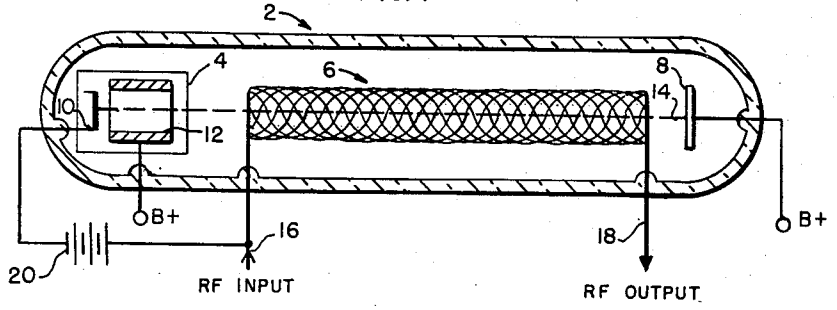

FIG. 8

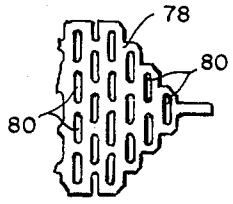

FIG. 2

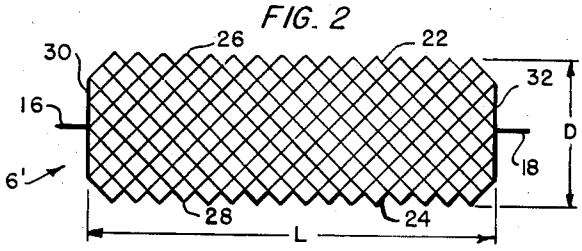

FIG. 3

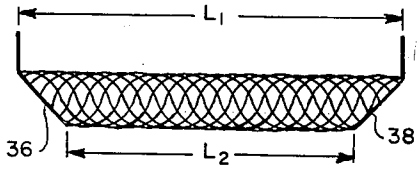

FIG. 4

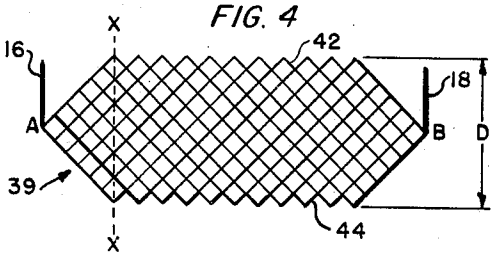

FIG. 5

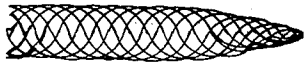

FIG. 6

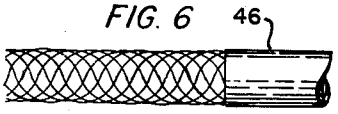

FIG. 7

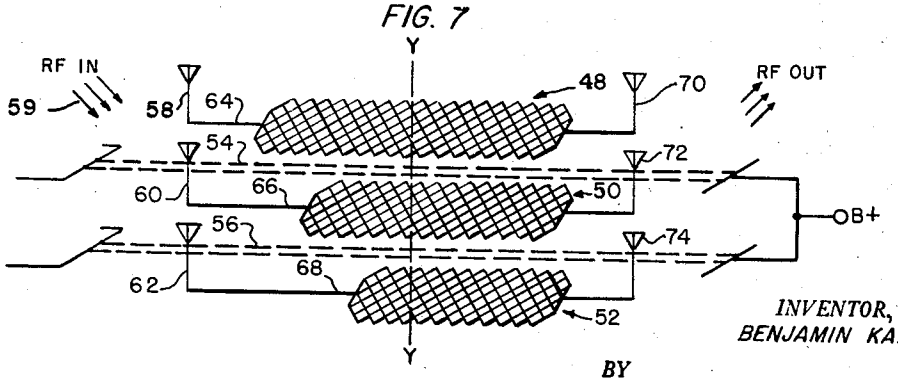

INVENTOR,
BENJAMIN KAZAN.

BY

Harry M. Saragovitz

ATTORNEY.

United States Patent Office 2,831,142
Patented Apr. 15, 1958

2,831,142

SLOW-WAVE STRUCTURES

Benjamin Kazan, Long Beach, N. J., assignor to the United States of America as represented by the Secretary of the Army

Original application October 3, 1951, Serial No. 249,611, now Patent No. 2,774,005, dated December 11, 1956. Divided and this application October 26, 1956, Serial No. 627,717

1 Claim. (Cl. 315—3.6)

(Granted under Title 35, U. S. Code (1952), sec. 266)

The invention described herein may be manufactured and used by or for the Government for governmental purposes, without the payment of any royalty thereon.

This application is a division of application Serial No. 249,611, filed October 3, 1951, now Patent No. 2,774,005, issued December 11, 1956.

This invention relates to high frequency amplifiers of the travelling wave type and more particularly to travelling wave tube electromagnetic propagating wave structures for slowing the phase velocity thereof.

Travelling wave tube amplifiers heretofore known include a conductor, either in the form of a helix or a series of inter-connected baffles, past which an electromagnetic wave can propagate. The phase velocity of the electromagnetic wave as measured along the axis of the conducting structure is small compared to the velocity along the surface of the conductor. An electron beam source is arranged to direct a stream of electrons adjacent the conductor, and where the conductor is in the form of a helix, the beam is usually directed axially through or adjacent the helix. In operation, the axial phase velocity of the electromagnetic wave is so related to the axial electron path that the electrons travel at a slightly higher velocity than the axial phase velocity of the electromagnetic wave. This difference in travel velocity results in part of the kinetic energy of the electrons being converted into radio frequency energy and the electromagnetic wave propagated in the direction of the electron flow is thereby amplified. Such travelling wave tubes are particularly suited for employment as an amplifier of microwave frequencies.

However, when utilizing a conventional helix as the propagating or phase velocity slowing means, the axial phase velocity of the electromagnetic wave is limited by both the pitch and radius, or diameter, of the helix. Because of the helical pitch, the travelling wave field propagated along the helix is skewed with respect to the axis thereof. Since the electrons interact with only those portions of the field parallel to the axis of the helix, it is apparent that if the skewed nature of the field can be eliminated, then a greater, or more favorable interaction, may occur, thereby increasing the gain of the tube. Also, it is well known that for efficient operation at very high frequencies, each helix turn should be only a fraction of the operating wavelength. Hence, helices with relatively small diameters must be utilized together with a very narrow electron beam. For controlling such a narrow beam, unusually high operating voltages and very strong magnetic fields are required.

It is therefore an object of this invention to provide an electromagnetic wave phase velocity slowing structure in a travelling wave tube which overcomes the aforesaid limitations.

It is a further object of this invention to provide an electromagnetic wave slowing structure in a travelling wave tube wherein the axial phase velocity of the electromagnetic wave is independent of pitch and/or diameter.

It is still a further object of this invention to provide a wire mesh as the electromagnetic wave phase velocity slowing structure in a travelling wave tube amplifier.

In accordance with one feature of the present invention, there is provided an electromagnetic wave phase slowing structure for a travelling wave tube comprising a cylindrical wire mesh network with the electron stream passing adjacent the cylindrical mesh in the direction of the axis of the cylinder. An electromagnetic wave is propagated along the cylindrical mesh network and the axial electric field interacts with the electron stream to amplify the propagated signal. At any cross-section perpendicular to the axis of the cylinder, there will be an electromagnetic wave of constant phase around the circumference thereof.

In accordance with another feature of the present invention, the phase slowing structure comprises a plurality of planar wire mesh networks stacked one above the other in parallel arrangement. A flat, ribbon-like electron stream is projected between each pair of said wire mesh networks to interact with an electromagnetic wave propagated substantially in phase on each of said planar mesh networks.

For a better understanding of the invention, together with other and further objects thereof, reference is had to the following description, taken in connection with the accompanying drawing in which:

Fig. 1 shows a travelling wave tube amplifier employing a cylindrical wire mesh as the electromagnetic wave propagating circuit;

Fig. 2 shows the plane wire mesh structure from which the cylindrical mesh of Fig. 1 may be formed;

Fig. 3 illustrates a modification of the cylindrical wire mesh employed in Fig. 1;

Fig. 4 shows the plane wire mesh structure from which the cylindrical mesh of Fig. 3 may be formed;

Fig. 5 illustrates a modification of the cylindrical wire mesh of Fig. 1 in which one end is shaped for suitable matching;

Fig. 6 illustrates another modification of a matching termination for the cylindrical mesh shown in Fig. 1;

Fig. 7 shows a travelling wave tube amplifier arrangement using a plurality of flat wire meshes as the phase slowing structures; and

Fig. 8 illustrates another form of mesh structure.

Referring now to the drawings, there is shown in Figure 1, a travelling wave tube designated generally at **2** comprising an electron gun section **4**, a collector anode **8**, and a cylindrical wire mesh network **6** intermediate electron gun **4** and anode **8**. Electron gun section **4** is shown as made up of a cathode **10** and an accelerating electrode **12**. An axial electron stream indicated by line **14** is projected from the cathode **10** to collector anode **8**. It is to be understood that structures for producing an axial electron stream are broadly old and that other structures than those described may be employed.

Cylindrical wire mesh network **6** surrounds axial stream **14** and is axially aligned therewith. If desired, the axial electron stream may be directed adjacent the outer surface of said cylindrical mesh. As shown, cylindrical wire mesh **6** is provided with input lead **16** and output lead **18**. Portions of waveguides or coaxial cable, not shown, may be coupled to said input and output leads in the conventional manner to serve as the radio frequency signal input and output circuits. A direct-current source of potential is applied between input lead **16** and cathode **10** by a battery **20**, or any other suitable source. This potential is of such a magnitude that the velocity of electron stream **14**, as it passes axially through or adjacent cylindrical mesh **6** is adjusted so that amplification of the externally applied radio frequency signal is achieved as it is propagated along said cylindrical mesh. A source of posi-

tive potential B+ is applied to collector anode 8 in the usual manner.

The detailed construction of cylindrical mesh 6 is illustrated in Fig. 2 which shows said cylindrical mesh as being made up of a flat lattice-like structure 6' consisting of co-planar diagonally intersecting wires. Although not essential to the invention, it is preferable to provide uniform spacing between successive wires in each diagonal plane. The serrated longitudinal edges 22 and 24 are so arranged that when lattice-like structure 6' is formed into a right circular cylinder having a longitudinal axis corresponding to the longitudinal dimension L, the peaks 26 of serrated edge 22 will coincide with the peaks 28 of serrated edge 24. The diameter of the right circular cylinder thus formed is a function of the wide dimension D of said lattice-like structure. Wide dimension D may be conveniently chosen inasmuch as the phase velocity slowing characteristics of such a cylindrical mesh structure is independent of the diameter. The ends of lattice-like structure 6' may be terminated by parallel wires 30 and 32, respectively, which are perpendicular to the longitudinal dimension L. As shown, input lead 16 and output lead 18 are connected respectively to the mid-points of wires 30 and 32.

In operation, a wave front starting at input lead 16 will proceed uniformly along the axis of cylindrical mesh 6 so that, at any cross section perpendicular to the longitudinal axis of the cylinder there will be a wave of constant phase around the circumference thereof. Thus the phase velocity of the propagated wave is dependent only on the mesh structure employed. Accordingly, the mesh structure may be shaped to cylinders of any diameter without affecting the phase velocity of the propagated electromagnetic wave.

Fig. 3 illustrates a preferred embodiment of the invention. As shown in Fig. 3, ends 36 and 38 of cylindrical mesh 40 are linearly tapered in opposite directions so that the longitudinal dimension of said cylindrical mesh gradually decreases from a maximum L'_1 to a minimum L_2. This tapered cylindrical mesh may be constructed from the lattice-like hexagonal structure 39 consisting of co-planar diagonally intersecting wires as shown in Fig. 4. Successive wires of each diagonal plane may be uniformly spaced. Parallel serrated longitudinal edges 42 and 44 are of equal length and are so arranged that when hexagonal lattice-like structure 39 is formed into a longitudinal cylinder, the peaks of serrated edge 42 will coincide with the peaks of serrated edge 44 to form the minimum longitudinal dimension L_2 of Fig. 3. The diameter of the cylinder thus formed is a function of the wide dimension D of said heagonal lattice-like structure. Apices A and B of said hexagonal structure are both equidistant from serrated longitudinal edges 42 and 44 and the dimension A–B corresponds to the maximum longitudinal dimension L_1 of Fig. 2. Input lead 16 and output lead 18 are connected respectively to apices A and B. By this arrangement, an electromagnetic wave starting at point A will arrive at the same moment at all points along the line X—X of lattice-like structure 39. Appropriate portions of waveguide or coaxial cable, not shown, may be provided to match the input and output circuits.

Other forms of matching may be employed, such as allowing the output end of the lattice-like network to taper down to a point, as shown in Fig. 5, or gradually have the diagonal wires of the lattice-like structure change their angle, becoming more and more parallel to the axis of the cylindrical mesh and then joining them to a solid cylinder 46, as shown in Fig. 6.

Fig. 7 illustrates a travelling wave tube amplifier embodying a plurality of flat or planar wire meshes of the type shown in Fig. 2 as the phase velocity slowing structure. Flat lattice-like wire meshes 48, 50 and 52 are stacked one above the other in parallel arrangement. Ribbon-like electron streams 54 and 56 pass respectively between each pair of wire meshes, namely, 48 and 50 and 50 and 52, at a predetermined velocity. Although three stacked sheets of wire mesh are shown in Fig. 7, it is to be understood that any other suitable number of wire meshes may be used, so long as they are stacked one above the other in parallel arrangement. In order to propagate an electromagnetic wave along each of said wire meshes, antennas 58, 60 and 62 are connected to the input, or left hand, end of each of the planar wire meshes by wires 64, 66, and 68 respectively. In Fig. 7, the wave front of the input wave, indicated by arrows 59, is shown as arriving at an angle to the direction of the electron flow and the axial direction of the parallel arranged phase slowing mesh structures 48—52. By tilting the incoming wave front in such a manner, the electron gun and collector anodes may be positioned conventionally at each end without interfering with the input radio-frequency signal. As a result, a particular incoming electromagnetic wavefront will excite the input antennas 58—62 successively in time. In order to compensate for this effect, the lengths of antenna connecting wires 64—68 are successively increased. Since the phase velocity along connecting wires 64—68 is much greater than the phase velocity along the stacked wire meshes 48—52, the electromagnetic waves arriving at a plane such as Y—Y will be in phase. Antennas 70, 72, and 76 may be similarly connected to the respective output ends of planar wire meshes 48—52.

Fig. 8 illustrates another form of phase delaying structure which may be employed in the embodiments shown in Fig. 1 and Fig. 7. This type of phase delaying structure may constitute a flat metal sheet 78 having oblong-shaped perforations 80. As shown the perforations are staggered so as to interleave with each other.

While there have been described what at present is considered to be the preferred embodiments of the invention, it will be understood by those skilled in the art that various changes and modifications may be made herein without departing from the invention, and it is, therefore, aimed in the appended claim to cover all such modifications and changes as fall within the spirit and scope of the invention.

What is claimed is:

In a travelling wave tube having means for generating a plurality of longitudinally ribbon-like parallel electron streams aligned in a vertical plane, a plurality of flat wire meshes greater in number by one than the number of said electron streams and stacked one above the other in spaced relationship, said flat wire meshes comprising lattice-like structures having coplanar intersecting wires and longitudinally positioned in parallel arrangement with said streams such that a respective electron stream is in simultaneous coupling relationship with two adjacent wire meshes, and means for propagating a prescribed electromagnetic wave simultaneously along each of said wire meshes whereby amplification is achieved by the interaction of said wave and said electron stream.

References Cited in the file of this patent

UNITED STATES PATENTS

2,479,288	Allen	Aug. 16, 1949
2,511,916	Hollingsworth et al.	June 20, 1950
2,708,236	Pierce	May 10, 1955

FOREIGN PATENTS

993,156	France	July 18, 1951
668,017	Great Britain	Mar. 12, 1952