PCT WORLD INTELLECTUAL PROPERTY ORGANIZATION
International Bureau

INTERNATIONAL APPLICATION PUBLISHED UNDER THE PATENT COOPERATION TREATY (PCT)

(51) International Patent Classification 5 :		(11) International Publication Number:
H05H 1/28, 1/30	A1	WO 92/19086
		(43) International Publication Date: 29 October 1992 (29.10.92)

(21) International Application Number: PCT/CA92/00156

(22) International Filing Date: 10 April 1992 (10.04.92)

(30) Priority data:
684,179 12 April 1991 (12.04.91) US

(71) Applicant: UNIVERSITE DE SHERBROOKE [CA/CA]; Sherbrooke, Quebec J1K 2R1 (CA).

(72) Inventors: BOULOS, Maher, I. ; 505 Montmagny, Sherbrooke, Quebec J1L 1H2 (CA). JUREWICZ, Jerzy ; 430 Barrette, Sherbrooke, Quebec J1L 1T8 (CA).

(74) Agent: GOUDREAU GAGE DUBUC & MARTINEAU WALKER; Stock Exchange Tower, 800 Place Victoria, Suite 3400, Montreal, Quebec H4Z 1E9 (CA).

(81) Designated States: AT (European patent), AU, BB, BE (European patent), BF (OAPI patent), BG, BJ (OAPI patent), BR, CA, CF (OAPI patent), CG (OAPI patent), CH (European patent), CI (OAPI patent), CM (OAPI patent), CS, DE (European patent), DK (European patent), ES (European patent), FI, FR (European patent), GA (OAPI patent), GB (European patent), GN (OAPI patent), GR (European patent), HU, IT (European patent), JP, KP, KR, LK, LU (European patent), MC (European patent), MG, ML (OAPI patent), MN, MR (OAPI patent), MW, NL (European patent), NO, PL, RO, RU, SD, SE (European patent), SN (OAPI patent), TD (OAPI patent), TG (OAPI patent).

Published
With international search report.

(54) Title: HIGH PERFORMANCE INDUCTION PLASMA TORCH WITH A WATER-COOLED CERAMIC CONFINEMENT TUBE

(57) Abstract

A high performance induction plasma torch (1) comprises a cylindrical torch body (2) made of cast ceramic or composite polymer, a coaxial cylindrical plasma confinement tube (9) located inside the torch body (2), a gas distributor head (11) secured to one end of the torch body (2) to supply the confinement tube (9) with gaseous substances, a cylindrical and coaxial induction coil (3) completely embedded in the ceramic or polymer material of the torch body (2), and a thin annular chamber (25) separating the coaxial torch body (2) and confinement tube (9). This confinement tube can be made of pure or composite ceramic materials based on sintered or reaction bonded silicon nitride, boron nitride, aluminum nitride or alumina, or any combinations of them with varying additives and fillers. The annular chamber (25) is about 1 mm thick and high velocity cooling water flows therein to efficiently cool the plasma confinement tube (9).

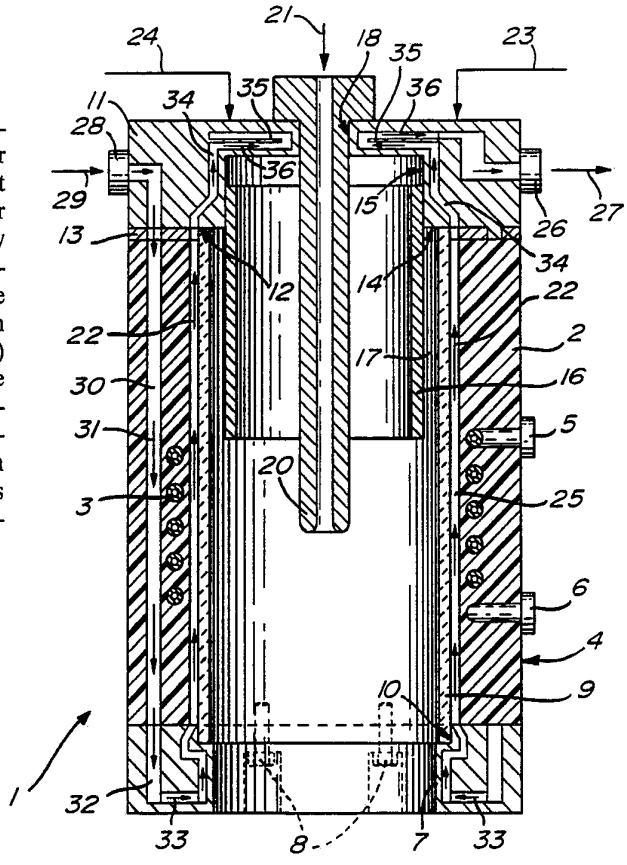

FOR THE PURPOSES OF INFORMATION ONLY

Codes used to identify States party to the PCT on the front pages of pamphlets publishing international applications under the PCT.

AT	Austria	**FI**	Finland	**ML**	Mali
AU	Australia	**FR**	France	**MN**	Mongolia
BB	Barbados	**GA**	Gabon	**MR**	Mauritania
BE	Belgium	**GB**	United Kingdom	**MW**	Malawi
BF	Burkina Faso	**GN**	Guinea	**NL**	Netherlands
BG	Bulgaria	**GR**	Greece	**NO**	Norway
BJ	Benin	**HU**	Hungary	**PL**	Poland
BR	Brazil	**IE**	Ireland	**RO**	Romania
CA	Canada	**IT**	Italy	**RU**	Russian Federation
CF	Central African Republic	**JP**	Japan	**SD**	Sudan
CG	Congo	**KP**	Democratic People's Republic of Korea	**SE**	Sweden
CH	Switzerland			**SN**	Senegal
CI	Côte d'Ivoire	**KR**	Republic of Korea	**SU**	Soviet Union
CM	Cameroon	**LI**	Liechtenstein	**TD**	Chad
CS	Czechoslovakia	**LK**	Sri Lanka	**TG**	Togo
DE	Germany	**LU**	Luxembourg	**US**	United States of America
DK	Denmark	**MC**	Monaco		
ES	Spain	**MG**	Madagascar		

HIGH PERFORMANCE INDUCTION PLASMA TORCH WITH A WATER-COOLED CERAMIC CONFINEMENT TUBE

BACKGROUND OF THE INVENTION

1. Field of the invention:

The present invention is concerned with the field of induction plasma torches and relates more specifically to a plasma torch of which the performance is improved by using a plasma confinement tube made of ceramic material and cooled through a high velocity fluid flowing into a thin annular chamber enveloping the outer surface of that tube.

2. Brief description of the prior art:

Induction plasma torches have been known since the early sixties. Their basic design has however been substantially improved over the past thirty years. Examples of prior plasma torch designs are described in British patent N° 1,061,956 (Cleaver) published on March 15, 1967, in United States patent N° 3,694,618 (Poole et al.) dated September 26, 1972, and in United States patent N° 3,763,392 (Hollister) of October 2, 1973. The basic concept of an induction plasma torch involves an induction coupling of the energy into the plasma using a 4 - 6 turns induction coil. A gas distributor head is used to create a

proper flow pattern into the region of the produced plasma, which is necessary to stabilize the plasma confined in a tube usually made of quartz, to maintain the plasma in the center of the coil and protect the plasma confinement tube against damage due to the high heat load from the plasma. At relatively high power levels (above 5-10 kW), additional cooling is required to protect the plasma confinement tube. This is usually achieved through deionized water flowing on the outer surface of the tube.

Numerous attempts have been made to improve the protection of the plasma confinement tube. These tentatives are concerned with the use of (a) a protective segmented metallic wall insert inside the plasma confinement tube [United Stated patent N° 4,431,901 (Hull) issued on February 14, 1984], (b) porous ceramic to constrict the plasma confinement tube [J. Mostaghimi, M. Dostie, and J. Jurewicz, "Analysis of an RF induction plasma torch with a permeable ceramic wall", Can. J. Chem. Eng., 67, 929-936 (1989)], and (c) radiatively cooled ceramic plasma confinement tubes [P. S. C. Van der Plas and L. de Galan, "A radiatively cooled torch for ICP-AES using 1 litre per min of argon", Spectrochemica Acta, 39B, 1161-1169 (1984) and P. S. C. Van der Plas and L. de Galan, "An evaluation of ceramic materials for use in non-cooled low flow ICP torches", Spectrochemica Acta, 42B, 1205-1216 (1987)]. These attempts each present their respective limitations and shortcomings.

The use of a segmented metallic wall insert to improve protection of the plasma confinement

tube present the drawback of substantially reducing the overall energy efficiency of the plasma torch.

It has been found that a plasma confinement tube made of porous ceramic material offers only limited protection.

Concerning the radiatively cooled confinement tubes, their ceramic materials must withstand the relatively high operating temperatures, exhibit an excellent thermal shock resistance and must not absorb the RF (radio frequency) field. Most ceramic materials fail to meet with one or more of these stringent requirements.

OBJECTS OF THE INVENTION

An object of the present invention is therefore to eliminate the above discussed drawbacks of the prior art.

Another object of the subject invention is to improve the protection of a plasma confinement tube made of ceramic material.

A third object of the invention is to provide a plasma torch with a confinement tube made of ceramic material and to cool this plasma confinement tube by means of a high velocity cooling fluid flowing into a thin annular chamber of constant thickness surrounding the outer surface of the confinement tube.

SUMMARY OF THE INVENTION

More specifically, in accordance with the present invention, there is provided an induction plasma torch comprising:

a tubular torch body including a cylindrical inner surface having a first diameter;

a plasma confinement tube (a) made of ceramic material having a high thermal conductivity, and (b) including a first end, a second end, and a cylindrical outer surface having a second diameter slightly smaller than the first diameter, this plasma confinement tube being mounted within the tubular torch body, and the cylindrical inner and outer surfaces being coaxial to define between the inner and outer surfaces a thin annular chamber of uniform thickness;

a gas distributor head mounted on the torch body at the first end of the plasma confinement tube for supplying at least one gaseous substance into that confinement tube, the gaseous substance flowing through the plasma confinement tube from its first end toward its second end;

an induction coil coaxial with the cylindrical inner and outer surfaces, situated outside of the thin annular chamber, and supplied with an electric current for inductively applying energy to

the gaseous substance flowing through the plasma confinement tube in order to produce and sustain a high temperature plasma in that confinement tube; and

means for establishing a high velocity flow of cooling fluid in the thin annular chamber, the high thermal conductivity of the ceramic material forming the confinement tube and the high velocity flow of cooling fluid both contributing in efficiently transferring heat from the plasma confinement tube, heated by the high temperature plasma, into the cooling fluid to thereby efficiently cool the confinement tube.

As the ceramic material of the plasma confinement tube is characterized by a high thermal conductivity, the high velocity of the cooling fluid flowing through the thin annular chamber provides a high heat transfer coefficient required to properly cool the plasma confinement tube. The intense and efficient cooling of the outer surface of the plasma confinement tube enables production of plasma at much higher power and temperature levels at lower gas flow rates. This also causes higher specific enthalpy levels of the gases at the exit of the plasma torch.

Advantageously, the cylindrical inner and outer surfaces are machined cylindrical surfaces, and the induction coil is embedded in the torch body.

In accordance with preferred embodiments of the invention, (a) the plasma confinement tube is made of pure or composite ceramic materials based on

sintered or reaction bonded silicon nitride, boron nitride, aluminum nitride and alumina, or any combinations of them with varying additives and fillers, presenting a high thermal conductivity, a high electrical resistivity and a high thermal shock resistance, (b) the annular chamber has a thickness of about 1 mm, (c) the cooling fluid comprises water, and (d) the high velocity flow of cooling fluid is parallel to the common axis of the cylindrical inner and outer surfaces.

Preferably, the torch body is made of cast composite polymer or cast ceramic in which the induction coil is completely embedded

As the induction coil is embedded in the cast ceramic or composite polymer of the torch body, the spacing between this coil and the plasma confinement tube can be accurately controlled to improve the energy coupling efficiency between the coil and the plasma. This also enables accurate control of the thickness of the annular chamber, without any interference caused by the induction coil, which control can be obtained by machining to low tolerance the inner surface of the torch body and the outer surface of the plasma confinement tube.

The objects, advantages and other features of the present invention will become more apparent upon reading of the following non restrictive description of a preferred embodiment thereof, given by way of example only with reference to the accompanying drawings.

BRIEF DESCRIPTION OF THE DRAWINGS

In the appended drawings:

Figure 1 is an elevational, cross sectional view of a high performance induction plasma torch in accordance with the present invention.

DETAILED DESCRIPTION OF THE PREFERRED EMBODIMENT

In Figure 1 of the drawings, the high performance induction plasma torch in accordance with the present invention is generally identified by the reference numeral 1.

The plasma torch 1 comprises a cylindrical torch body 2 made of a cast ceramic or composite polymer. An induction coil 3, made of water-cooled copper tube, is completely embedded in the torch body 2 whereby positional stability of this coil is assured. The two ends of the induction coil 3 both extend to the outer surface 4 of the torch body 2 and are respectively connected to a pair of electric terminals 5 and 6 through which cooling water and an RF current can be supplied to this coil 3. As can be seen, the torch body 2 and the induction coil 3 are cylindrical and coaxial.

A plasma exit nozzle 7 is cylindrical and is attached to the lower end of the torch body 2 through a plurality of bolts such as 8. As illustrated in Figure 1, the nozzle 7 has an outer diameter corresponding substantially to that of the torch body 2, and an inner diameter generally corresponding to the inner diameter of a plasma confinement tube 9, made of ceramic material and mounted inside the torch body 2, coaxially therewith. The exit nozzle 7 is formed with an upper, inner right angle seat 10 to receive the lower end of the confinement tube 9.

A gas distributor head 11 is fixedly secured to the upper end of the torch body 2 by means of a plurality of bolts (not shown), similar to the bolts 8. A flat disk 13 is interposed between the torch body 2 and the gas distributor head 11. It is equipped with O-rings to seal the joint with the body 2 and head 11. The disk 13 has an inner diameter slightly larger than the outer diameter of the confinement tube 9 to form with the underside 14 of the head 11 a right angle seat 12 capable of receiving the upper end of the tube 9.

The gas distributor head 1 also comprises an intermediate tube 16. A cavity is formed in the underside 14 of the head 11, which cavity defines a cylindrical wall 15 of which the diameter is dimensioned to receive the upper end of the intermediate tube 16. The tube 16 is shorter and smaller in diameter than the tube 9, and it is cylindrical and coaxial with the body 2, tube 9 and

coil 3. A cylindrical cavity 17 is accordingly defined between the intermediate 16 and confinement 9 tubes.

The gas distributor head 11 is provided with a central opening 18 through which a tubular, central powder injection probe 20 is introduced. The probe 20 is elongated and coaxial with the tubes 9 and 16, the coil 3 and body 2.

Powder and a carrier gas (arrow 21) are injected in the torch 1 through the probe 20. The powder transported by the carrier gas and injected through the central tube constitutes a material to be molten or vaporized by the plasma, as well known in the art.

The gas distributor head 11 comprises conventional conduit means (not shown) suitable to inject a sheath gas in the cylindrical cavity 17 (arrow 23) and to cause a longitudinal flow of this gas over the inner surface of the confinement tube 9.

The gas distributor head 11 also comprises conventional conduit means (not shown) adequate to inject a central gas inside the intermediate tube 16 (arrow 24) and to cause a tangential flow of this central gas.

It is believed to be within the skill of an expert in the art to select (a) the structure of the powder injection probe 20 and of the conduit means (arrows 23 and 24) through which the central and

sheath gases are injected, (b) the nature of the powder, carrier gas, sheath gas and central gas, and (c) the materials of which are made the exit nozzle 7, the gas distributor head 11 and its intermediate tube 16, and the disk 13, and accordingly these elements will not be further described in the present specification.

As illustrated in Figure 1, a thin (≈ 1 mm thick) annular chamber 25 is defined between the inner surface of the torch body 2 and the outer surface of the confinement tube 9. High velocity cooling water flows in the thin annular chamber 25 over the outer surface of the tube 9 (arrows such as 22) to cool this confinement tube of which the inner surface is exposed to the high temperature of the plasma.

The cooling water (arrow 29) is injected in the thin annular chamber 25 through an inlet 28, a conduit 30 made in the head 11, disk 13 and body 2 (arrows such as 31), and annular conduit means 32, generally U-shaped in cross section and structured to transfer the water from the conduit 30 to the lower end of the annular chamber 25. As can be seen, the water flows along the inner surface of the exit nozzle 7 to efficiently cool this surface which is exposed to the heat produced by the plasma.

The cooling water from the upper end of the thin annular chamber 25 is transferred to an outlet 26 (arrow 27) through two parallel conduits 34 formed in the gas distribution head 11 (arrows such as

36). A wall 35 is also formed in the conduits 34 to cause flowing of cooling water along the inner surface of the head 11 and thereby efficiently cool this inner surface.

In operation, the inductively coupled plasma is generated by applying an RF current in the induction coil 3 to produce an RF magnetic field in the confinement tube 9. The applied field induces Eddy currents in the ionized gas and by means of Joule heating, a stable plasmoid is sustained. The operation of an induction plasma torch, including ignition of the plasma, is believed to be well known in the art and does not need to be described in further detail in the present specification.

The ceramic material of the plasma confinement tube 9 can be pure or composite ceramic materials based on sintered or reaction bonded silicon nitride, boron nitride, aluminum nitride and alumina, or any combinations of them with varying additives and fillers. This ceramic material is dense and characterized by a high thermal conductivity, a high electrical resistivity and a high thermal shock resistance.

As the ceramic body of the plasma confinement tube 9 presents a high thermal conductivity, the high velocity of the cooling water flowing in the thin annular chamber 25 provides a high heat transfer coefficient suitable and required to properly cool the plasma confinement tube 9. The intense and efficient cooling of the outer surface of

the plasma confinement tube 9 enables production of plasma at much higher power at lower gas flow rates than normally required in standard plasma torches comprising a confinement tube made of quartz. This causes in turn higher specific enthalpy levels of the gases at the exit of the plasma torch.

As can be appreciated, the very small thickness (≈ 1 mm) of the annular chamber 25 plays a key role in increasing the velocity of the cooling water over the outer surface of the confinement tube 9 and accordingly to reach the required high thermal transfer coefficient. To that effect, the velocity of the cooling fluid over the outer surface of the confinement tube 9 should be at least 1 meter/second.

The induction coil 3 being completely embedded in the cast ceramic or composite polymer of the torch body 2, the spacing between the induction coil 3 and the plasma confinement tube 9 can be accurately controlled to improve the energy coupling efficiency between the coil 3 and the plasma. This also enables accurate control of the thickness of the annular chamber 25, without any interference caused by the induction coil 3, which control is obtained by machining to low tolerance the inner surface of the torch body 2 and the outer surface of the plasma confinement tube 9.

It should be pointed out that, in order to successfully realize the induction plasma torch in accordance with the present invention, one must take into consideration a number of critical factors having

a direct influence on the torch performance. These factors can be summarized as follows:

- The quality of the plasma confinement tube 9 is of critical importance since it is closely related to the requirements of high thermal conductivity, high electrical resistivity and high thermal shock resistance. Although a tube 9 made of sintered silicon nitride has been successfully tested, the present invention is not limited to the use of this ceramic material but also encompasses the use of other materials either pure or composite provided that they satisfy the above stringent requirements. For example, boron nitride, aluminum nitride or alumina composites constitute possible alternatives.

- It is a critical requirement of accurately controlling the small thickness of the annular chamber 25 between the torch body 2 and the plasma confinement tube 9, and the outer surface of the ceramic tube 9 and the inner surface of the torch body 2 have therefore to be machined to low tolerance. Moreover, as the induction coil 3 is embedded in the body 2 made of cast ceramic or composite polymer, this body 2 must be machined to low tolerance on its inner surface to ensure its concentricity with the plasma confinement tube 9.

- The quality of the cooling water, and its velocity over the outer surface of the plasma confinement tube 9 are also of critical importance to carry out efficient cooling of this tube 9 and

protection thereof against the high thermal fluxes to which it is exposed by the plasma.

Although the present invention has been described hereinabove by way of a preferred embodiment thereof, this embodiment can be modified at will, within the scope of the appended claims, without departing from the spirit and nature of the subject invention.

CLAIMS

1. An induction plasma torch comprising:

a tubular torch body including a cylindrical inner surface having a first diameter;

a plasma confinement tube (a) made of ceramic material having a high thermal conductivity, and (b) including a first end, a second end, and a cylindrical outer surface having a second diameter slightly smaller than said first diameter, said plasma confinement tube being mounted within said tubular torch body, and said cylindrical inner and outer surfaces being coaxial to define between said inner and outer surfaces a thin annular chamber of uniform thickness;

a gas distributor head mounted on the torch body at the first end of the plasma confinement tube for supplying at least one gaseous substance into said confinement tube, said at least one gaseous substance flowing through the plasma confinement tube from its first end toward its second end;

an induction coil coaxial with said cylindrical inner and outer surfaces, situated outside of said thin annular chamber, and supplied with an electric current for inductively applying energy to said at least one gaseous substance flowing through the plasma confinement tube in order to produce and sustain a high temperature plasma in said confinement tube; and

means for establishing a high velocity flow of cooling fluid in the thin annular chamber, the

high thermal conductivity of the ceramic material forming the confinement tube and the high velocity flow of cooling fluid both contributing in efficiently transferring heat from the plasma confinement tube, heated by said high temperature plasma, into the cooling fluid to thereby efficiently cool said confinement tube.

2. The plasma torch of claim 1, in which said cylindrical inner and outer surfaces are machined cylindrical surfaces.

3. The plasma torch of claim 1, in which said induction coil is embedded in said torch body.

4. The plasma torch of claim 2, in which said induction coil is embedded in said torch body.

5. The plasma torch of claim 1, in which the said ceramic material comprises silicon nitride.

6. The plasma torch of claim 1, in which said ceramic material comprises sintered or reaction bonded silicon nitride including at least one additive and/or filler.

7. The plasma torch of claim 1, wherein the plasma confinement tube comprises ceramic material selected from the group consisting of boron nitride, aluminum nitride, and alumina.

8. The plasma torch of claim 1, in which said ceramic material is a dense ceramic material having a high thermal conductivity, a high electrical resistivity and a high thermal shock resistance.

9. The plasma torch of claim 1, wherein said annular chamber has a thickness of about 1 mm, and wherein the velocity of the flow of cooling fluid in said annular chamber is at least 1 meter/second.

10. The plasma torch of claim 1, wherein the cooling fluid comprises water.

11. The plasma torch of claim 1, in which the high velocity flow of cooling fluid is parallel to the common axis of said cylindrical inner and outer surfaces.

12. The plasma torch of claim 1, in which said torch body is made of a cast composite polymer in which the induction coil is completely embedded.

13. The plasma torch of claim 1, in which the torch body is made of a cast ceramic in which the induction coil is completely embedded.

14. The plasma torch of claim 1, wherein the induction coil is made of an electrically conductive tube supplied with a cooling fluid to cool said induction coil.

15. The plasma torch of claim 1, wherein said plasma torch further comprises a plasma exit nozzle mounted on the torch body at the second end of the plasma confinement tube, wherein said head and nozzle each comprise an inner surface, and wherein the high velocity flow establishing means comprise conduit means in the gas distributor head and the plasma exit nozzle, said cooling fluid flowing at high velocity through the said conduit means which are so positioned as to allow the cooling fluid to cool the inner surfaces of said head and nozzle.

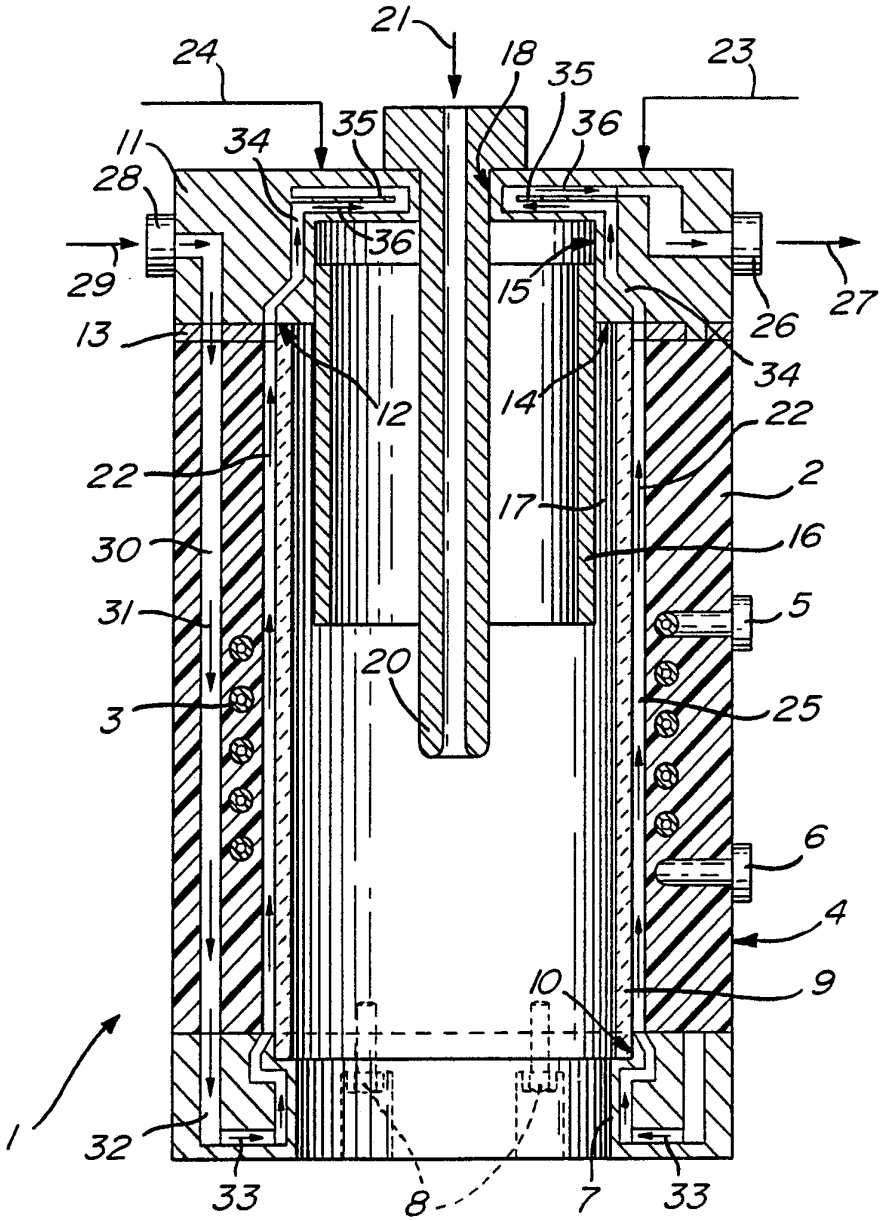
21
24
18
35
23
35
36
11
34
28
36
29
15
27
26
13
34
12
14
22
22
2
17
30
16
31
5
20
3
25
6
4
10
9
1
32
33
8
7
33

Fig. 1

INTERNATIONAL SEARCH REPORT

PCT/CA 92/00156

International Application No

I. CLASSIFICATION OF SUBJECT MATTER (if several classification symbols apply, indicate all)[6]

According to International Patent Classification (IPC) or to both National Classification and IPC

Int.Cl. 5 H05H1/28; H05H1/30

II. FIELDS SEARCHED

Minimum Documentation Searched[7]

Classification System	Classification Symbols
Int.Cl. 5	H05H

Documentation Searched other than Minimum Documentation to the Extent that such Documents are Included in the Fields Searched[8]

III. DOCUMENTS CONSIDERED TO BE RELEVANT[9]

Category °	Citation of Document,[11] with indication, where appropriate, of the relevant passages[12]	Relevant to Claim No.[13]
Y	US,A,3 731 047 (MULLEN ET AL) 1 May 1973 see column 2, line 60 - column 3, line 40 see column 4, line 18 - line 22 see column 4, line 40 - line 61 see column 5, line 38 - line 45	1-2,5-8 10-11,14
A	see column 7, line 6 - line 11 see figures 2-3	9

Y	FR,A,2 539 942 (PLASMA ENERGY CO.) 27 July 1984 see page 18, line 10 - page 19, line 14	1-2,5-8 10-11,14
A	see figures 1,33	9

Y	PATENT ABSTRACTS OF JAPAN vol. 11, no. 67 (M-566)(2514) 28 February 1987 & JP,A,61 226 188 (TOSHIBA) 8 October 1986 see abstract	5-6

	-/--	

° Special categories of cited documents :[10]

"A" document defining the general state of the art which is not considered to be of particular relevance

"E" earlier document but published on or after the international filing date

"L" document which may throw doubts on priority claim(s) or which is cited to establish the publication date of another citation or other special reason (as specified)

"O" document referring to an oral disclosure, use, exhibition or other means

"P" document published prior to the international filing date but later than the priority date claimed

"T" later document published after the international filing date or priority date and not in conflict with the application but cited to understand the principle or theory underlying the invention

"X" document of particular relevance; the claimed invention cannot be considered novel or cannot be considered to involve an inventive step

"Y" document of particular relevance; the claimed invention cannot be considered to involve an inventive step when the document is combined with one or more other such documents, such combination being obvious to a person skilled in the art.

"&" document member of the same patent family

IV. CERTIFICATION

Date of the Actual Completion of the International Search	Date of Mailing of this International Search Report
25 JUNE 1992	13. 07. 92
International Searching Authority	**Signature of Authorized Officer**
EUROPEAN PATENT OFFICE	CAPOSTAGNO E.

Form PCT/ISA/210 (second sheet) (January 1985)

III. DOCUMENTS CONSIDERED TO BE RELEVANT (CONTINUED FROM THE SECOND SHEET)

Category °	Citation of Document, with indication, where appropriate, of the relevant passages	Relevant to Claim No.
A	SPECTROCHIMICA ACTA. vol. 39B, no. 9-11, 1984, OXFORD GB pages 1161 - 1169; VAN DER PLAS ET AL.: 'A radiatevely cooled torch for ICP-AES using 1 l min-1 of argon' cited in the application see abstract see page 1163, paragraph 2 - page 1164, paragraph 3	2,7
A	FR,A,1 395 307 (ASS. ELECTRIC INDUSTRIES) 1 March 1965 see page 2, left column, paragraph 1 see figure 2	3-4
A	WO,A,9 101 077 (GAZ DE FRANCE) 24 January 1991 see page 6, line 12 - line 20 see figure 1	10-11,15

ANNEX TO THE INTERNATIONAL SEARCH REPORT ON INTERNATIONAL PATENT APPLICATION NO. CA 9200156 SA 58368

This annex lists the patent family members relating to the patent documents cited in the above-mentioned international search report. The members are as contained in the European Patent Office EDP file on
The European Patent Office is in no way liable for these particulars which are merely given for the purpose of information. 25/06/92

Patent document cited in search report	Publication date	Patent family member(s)		Publication date
US-A-3731047	01-05-73	None		
FR-A-2539942	27-07-84	US-A-	4549065	22-10-85
		AU-B-	558101	15-01-87
		AU-A-	2366384	26-07-84
		CA-A-	1231393	12-01-88
		DE-A-	3401777	26-07-84
		GB-A,B	2135159	22-08-84
		GB-A,B	2178280	04-02-87
		JP-A-	59181500	15-10-84
		SE-B-	457764	23-01-89
		SE-A-	8400232	22-07-84
		US-A-	4559439	17-12-85
		US-A-	4678888	07-07-87
FR-A-1395307		None		
WO-A-9101077	24-01-91	FR-A-	2649850	18-01-91