US 20040158267A1

(19) **United States**

(12) **Patent Application Publication** (10) **Pub. No.: US 2004/0158267 A1**

**Sancoff et al.** (43) **Pub. Date: Aug. 12, 2004**

(54) **APPARATUS AND METHOD FOR PLACING MULTIPLE SUTURES DURING ANASTOMOSIS**

(76) Inventors: **Gregory E. Sancoff**, North Hampton, NH (US); **John T. Rice**, Lincoln, MA (US); **Frederic P. Field**, North Hampton, NH (US)

Correspondence Address:
**Mark J. Pandiscio**
**Pandiscio & Pandiscio**
**470 Totten Pond Road**
**Waltham, MA 02154 (US)**

(21) Appl. No.: **10/764,837**

(22) Filed: **Jan. 26, 2004**

**Related U.S. Application Data**

(63) Continuation of application No. 09/705,997, filed on Nov. 3, 2000, now Pat. No. 6,682,540.

(60) Provisional application No. 60/163,680, filed on Nov. 5, 1999.

**Publication Classification**

(51) **Int. Cl.**[7] ..... **A61B 17/08**

(52) **U.S. Cl.** ..... **606/153**

(57) **ABSTRACT**

An apparatus for placing multiple sutures during anastomosis of physiological vessels includes a crown portion having a plurality of strands connected together by one or more circular bands. The strands each form a point at one end with a curved hook at the same end. The curved hook acts as a suture to retain one or more of the vessels. An alternative embodiment includes a plurality of strands, or wires, that are inserted through one or more vessels to simultaneously place multiple sutures. The present invention also comprises a method for placing a plurality of sutures simultaneously with an apparatus.

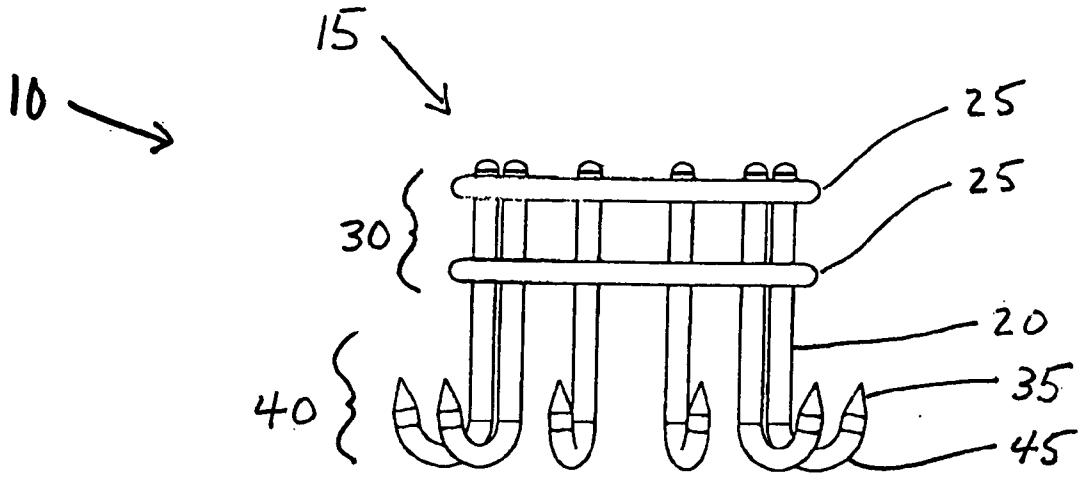

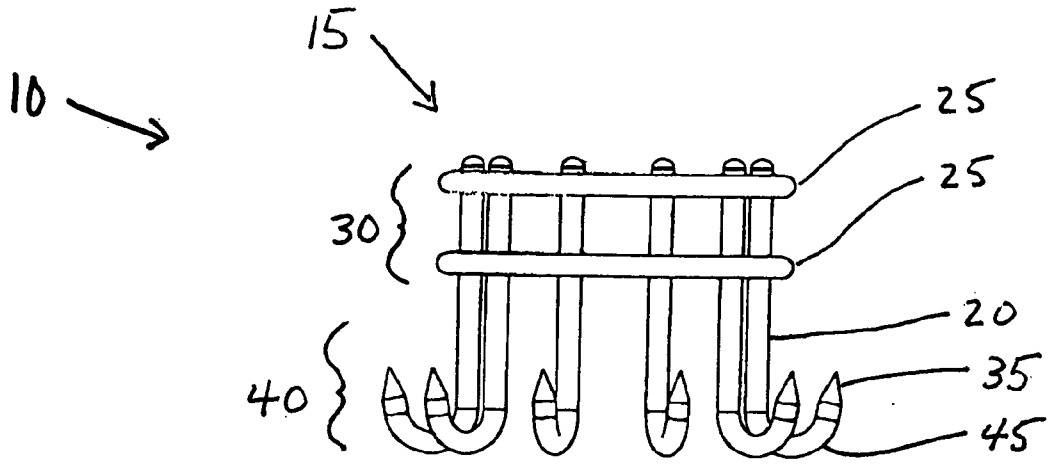


FIG. 1A

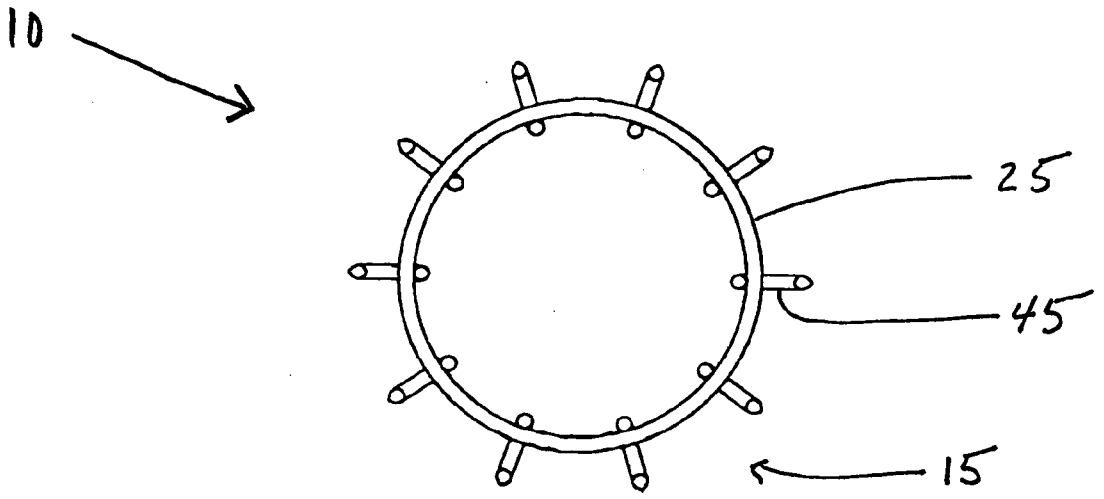


FIG. 1B

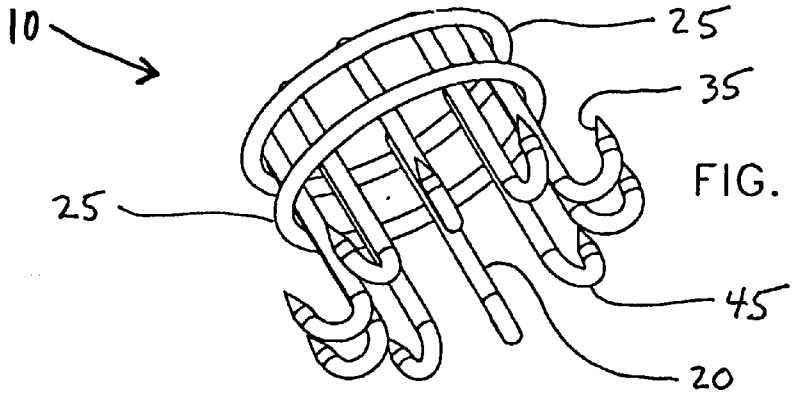


FIG. 1C

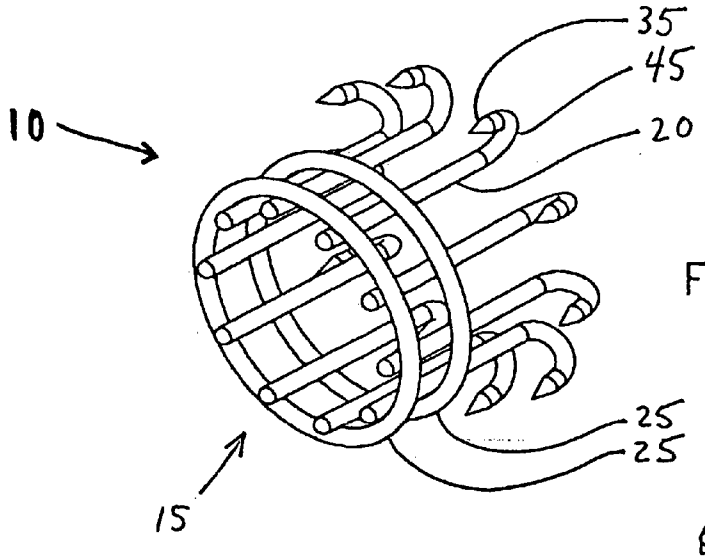


FIG. 1D

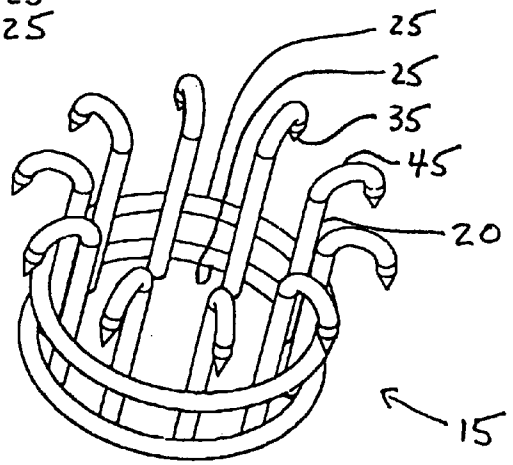


FIG. 1E



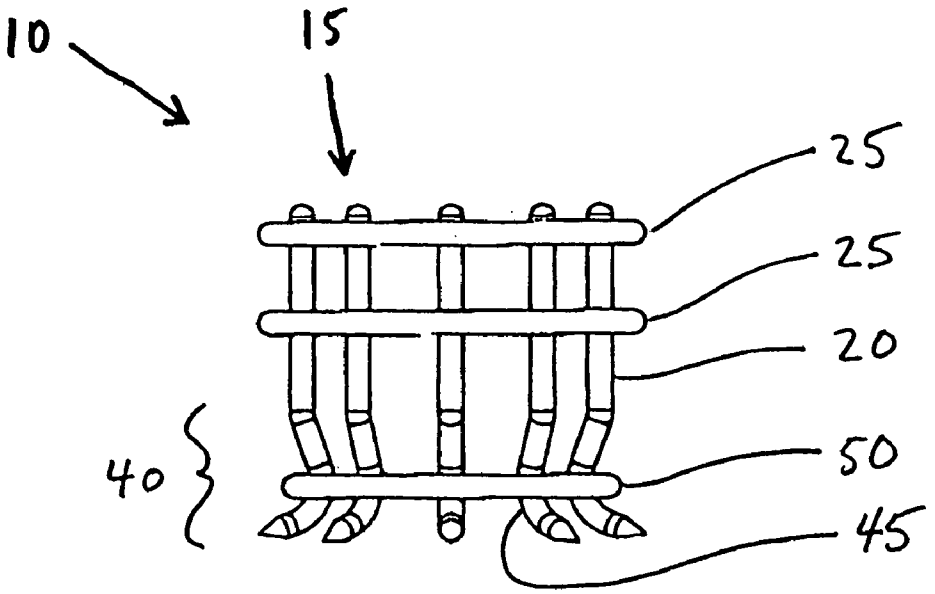


FIG. 2A

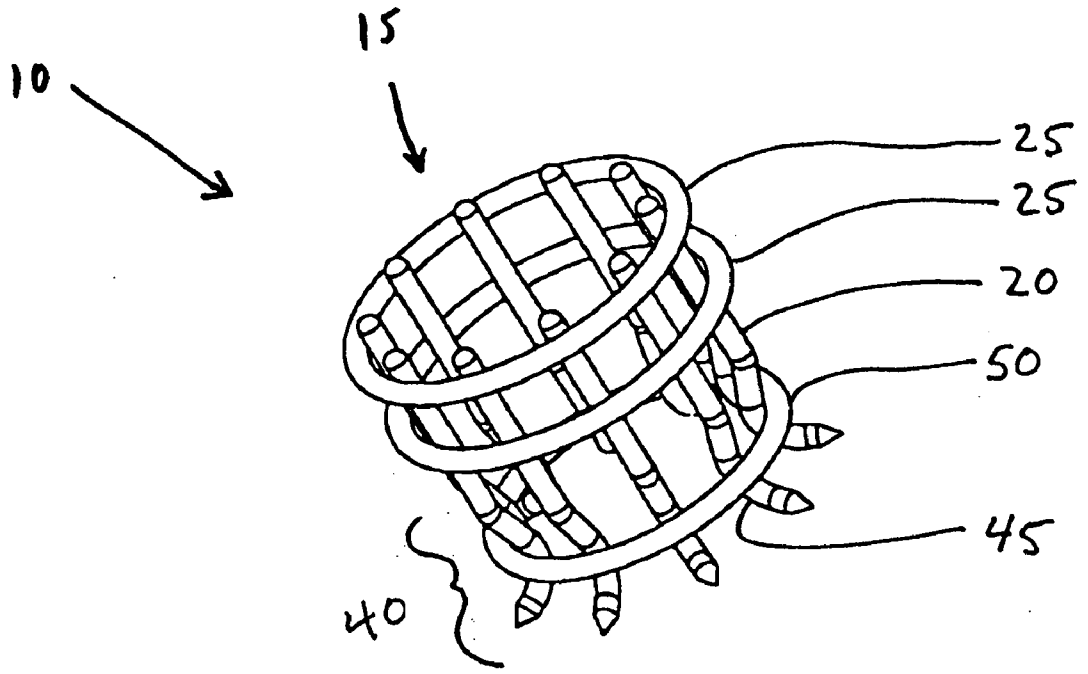


FIG. 2B

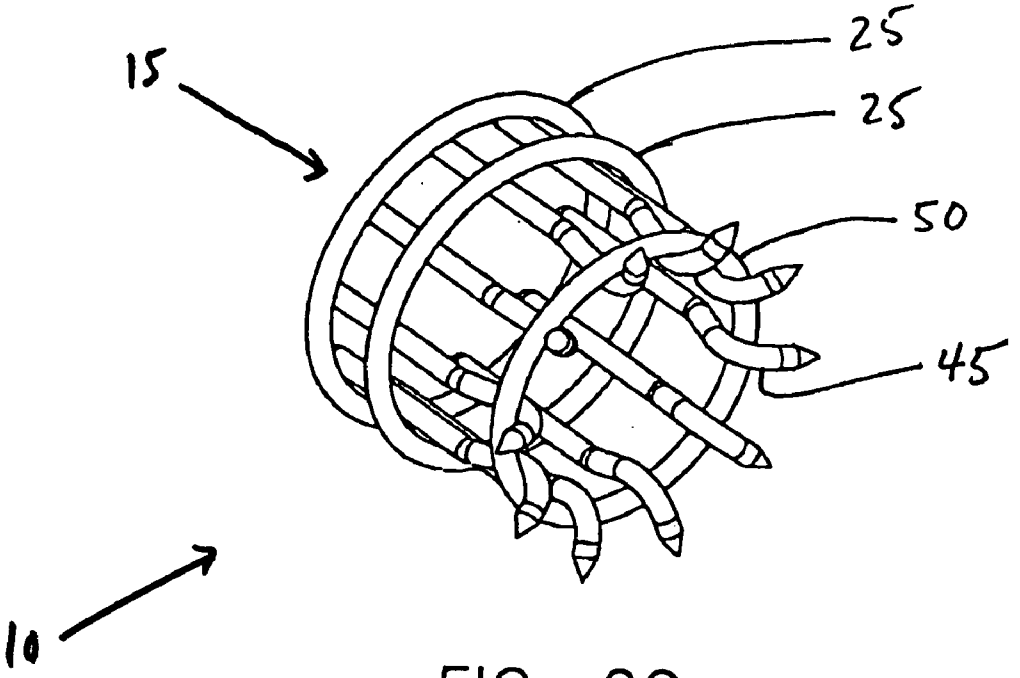


FIG. 2C

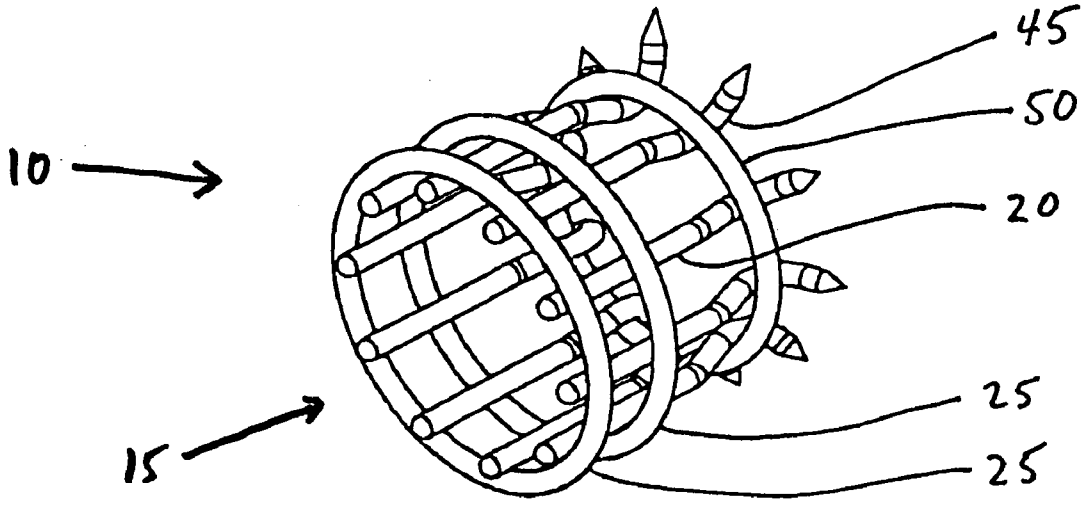


FIG. 2D

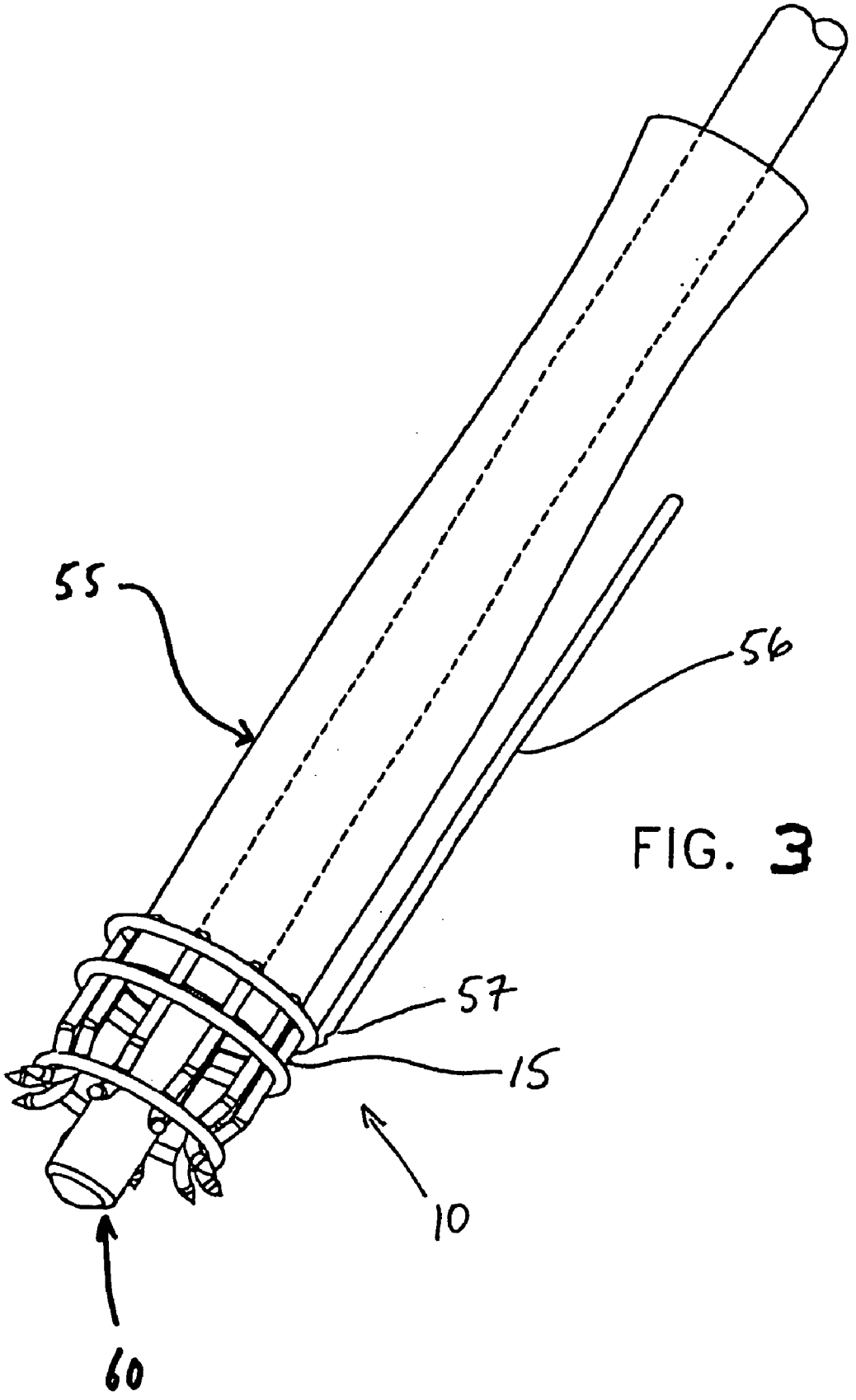


FIG. 3

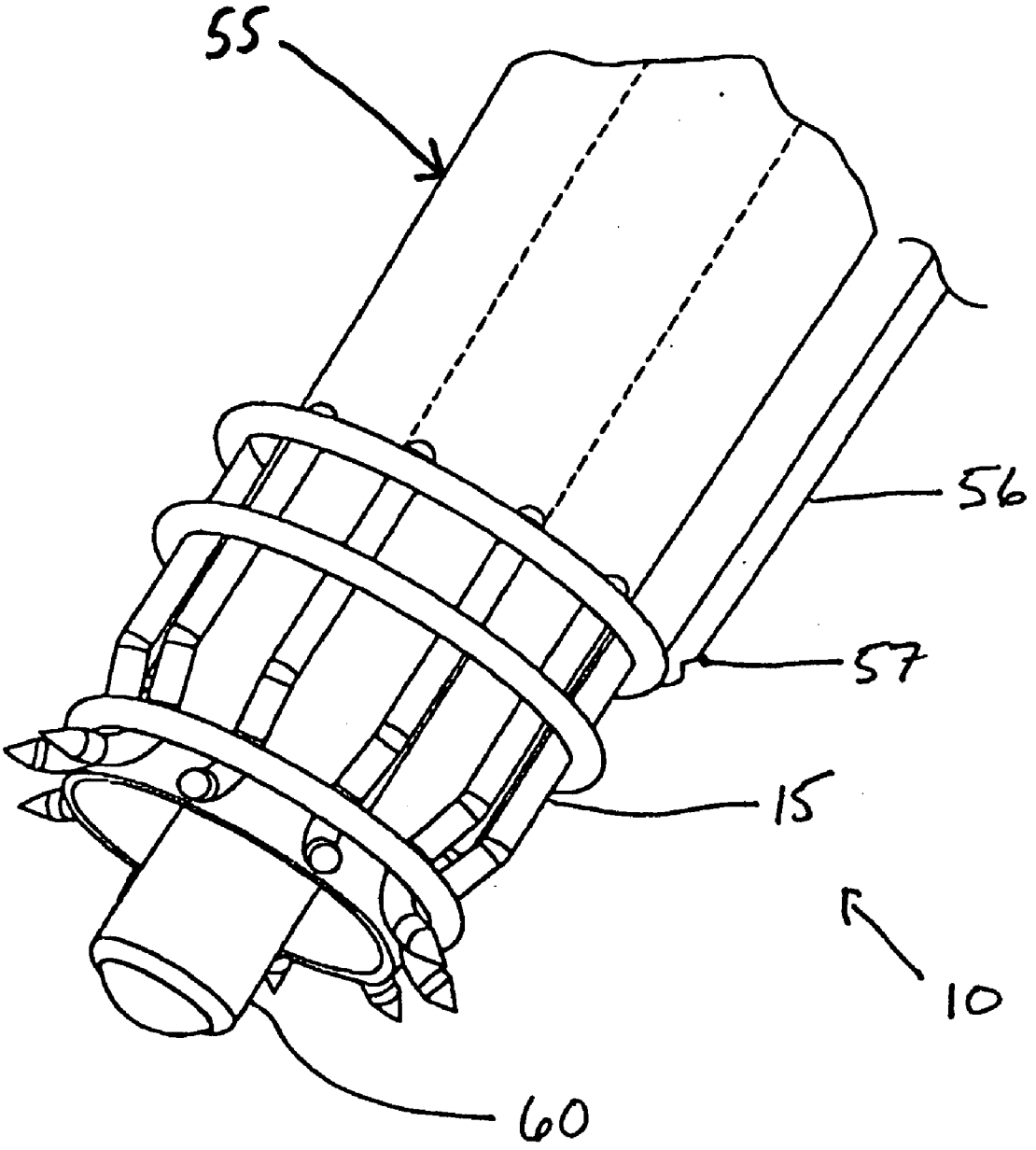


FIG. 4A

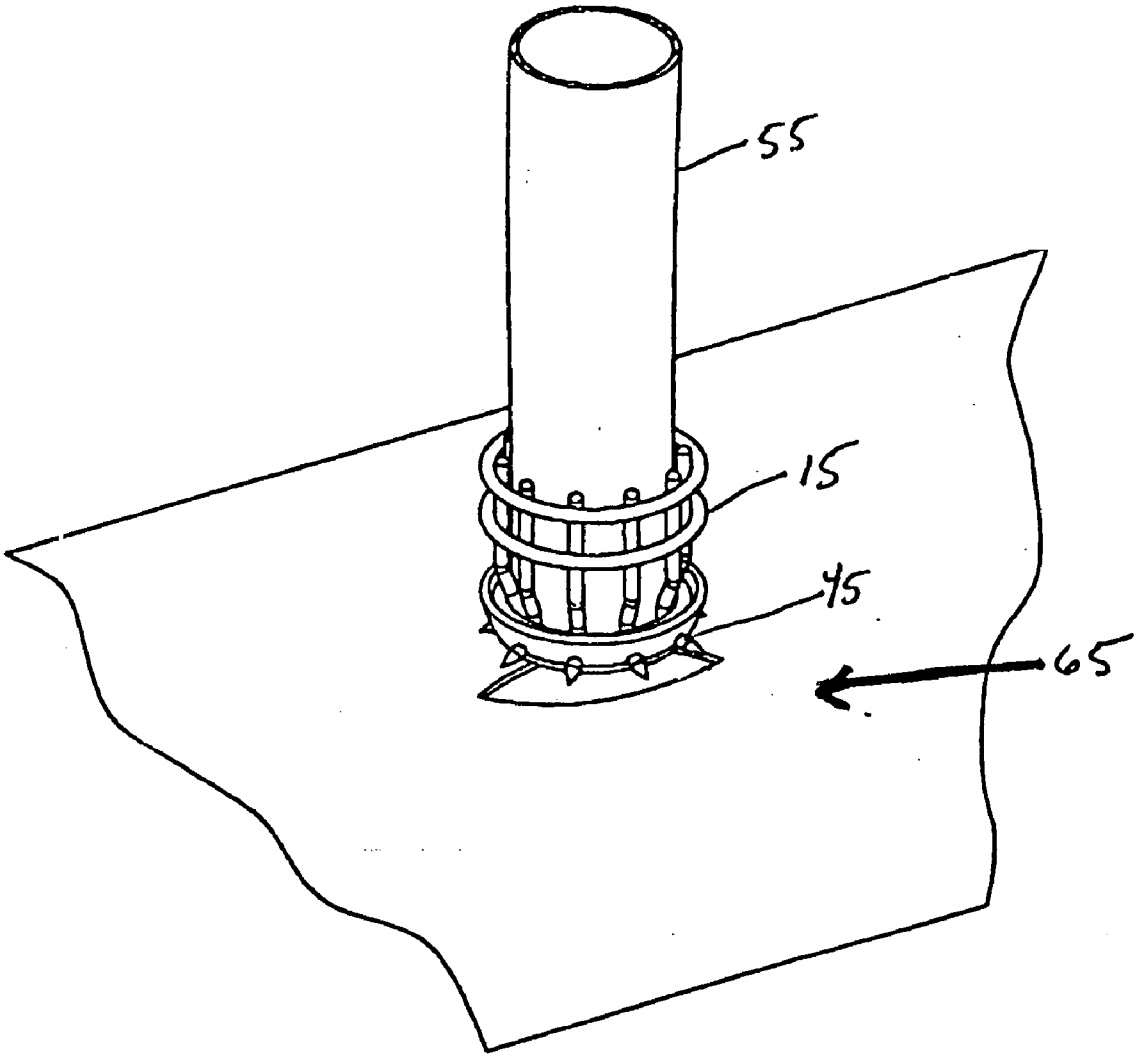


FIG. 4B

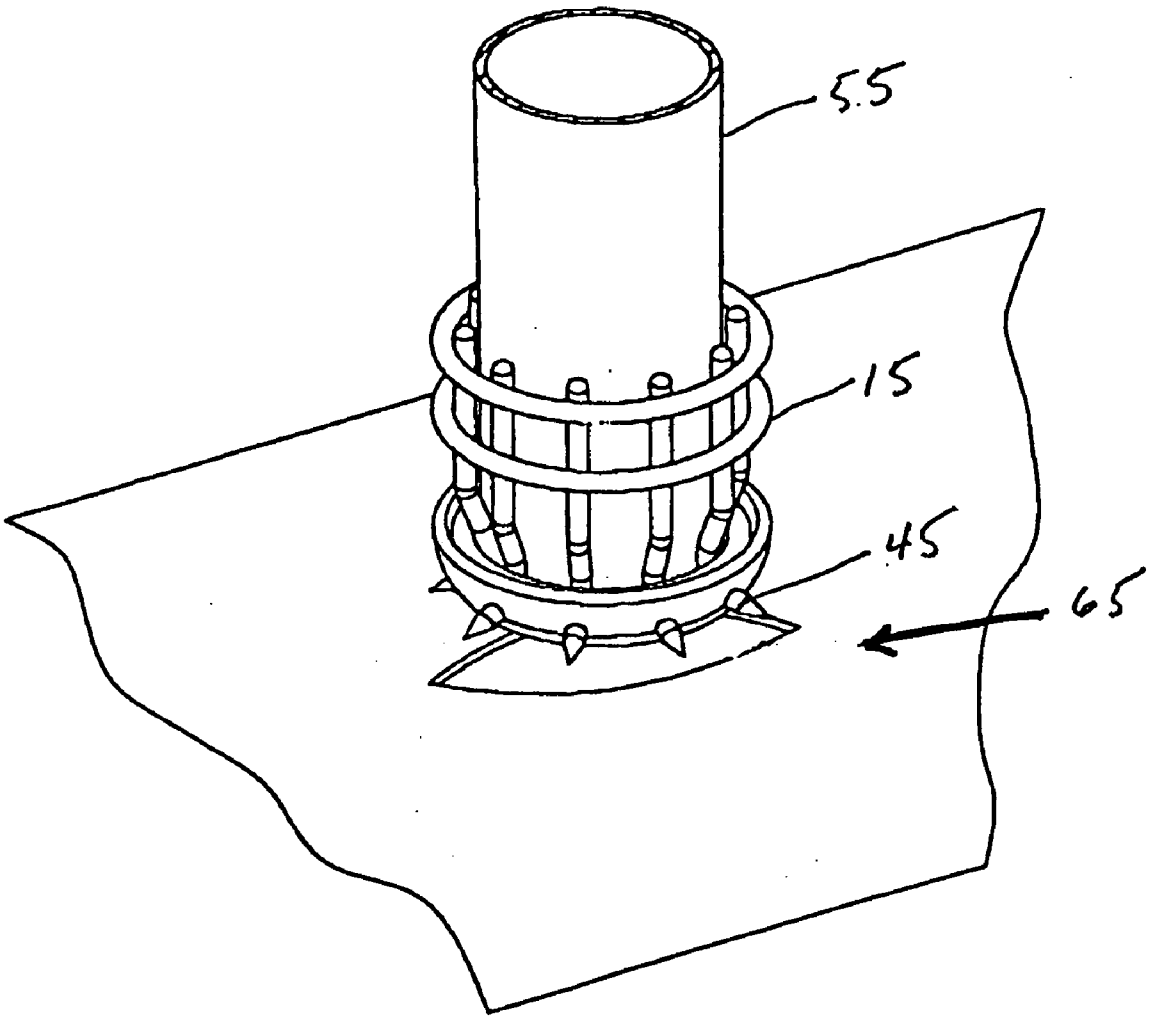


FIG. 4C

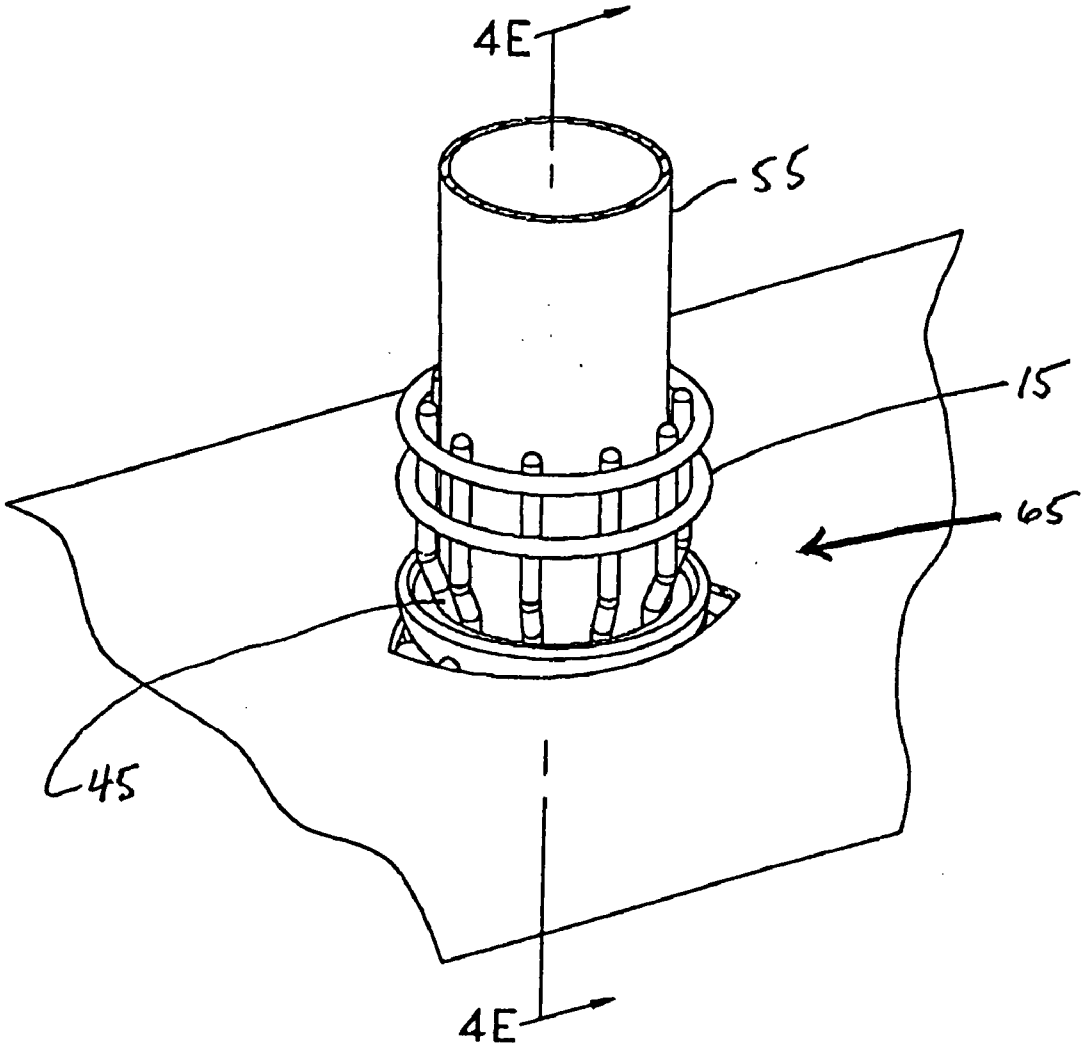


FIG. 4D

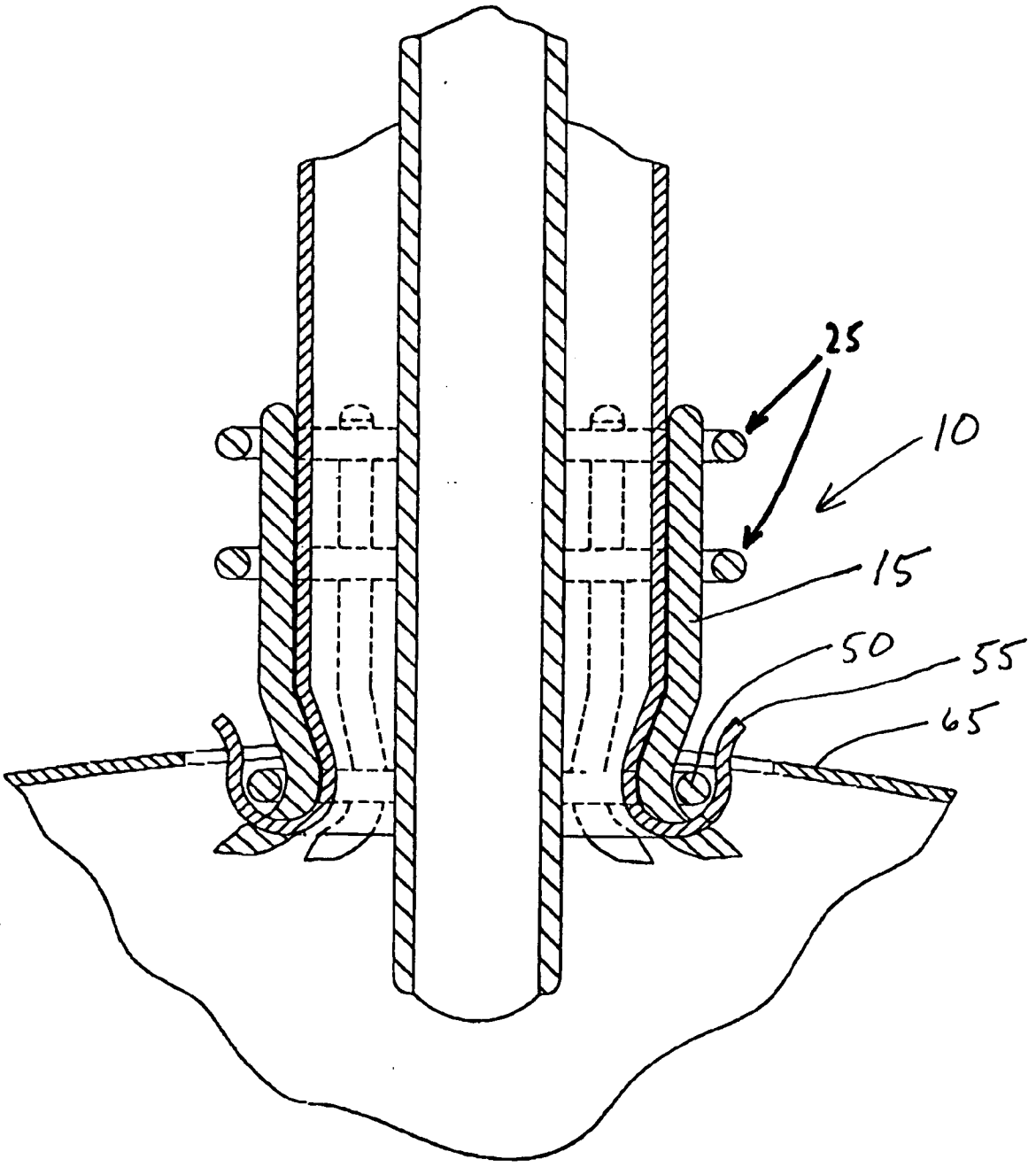


FIG. 4E

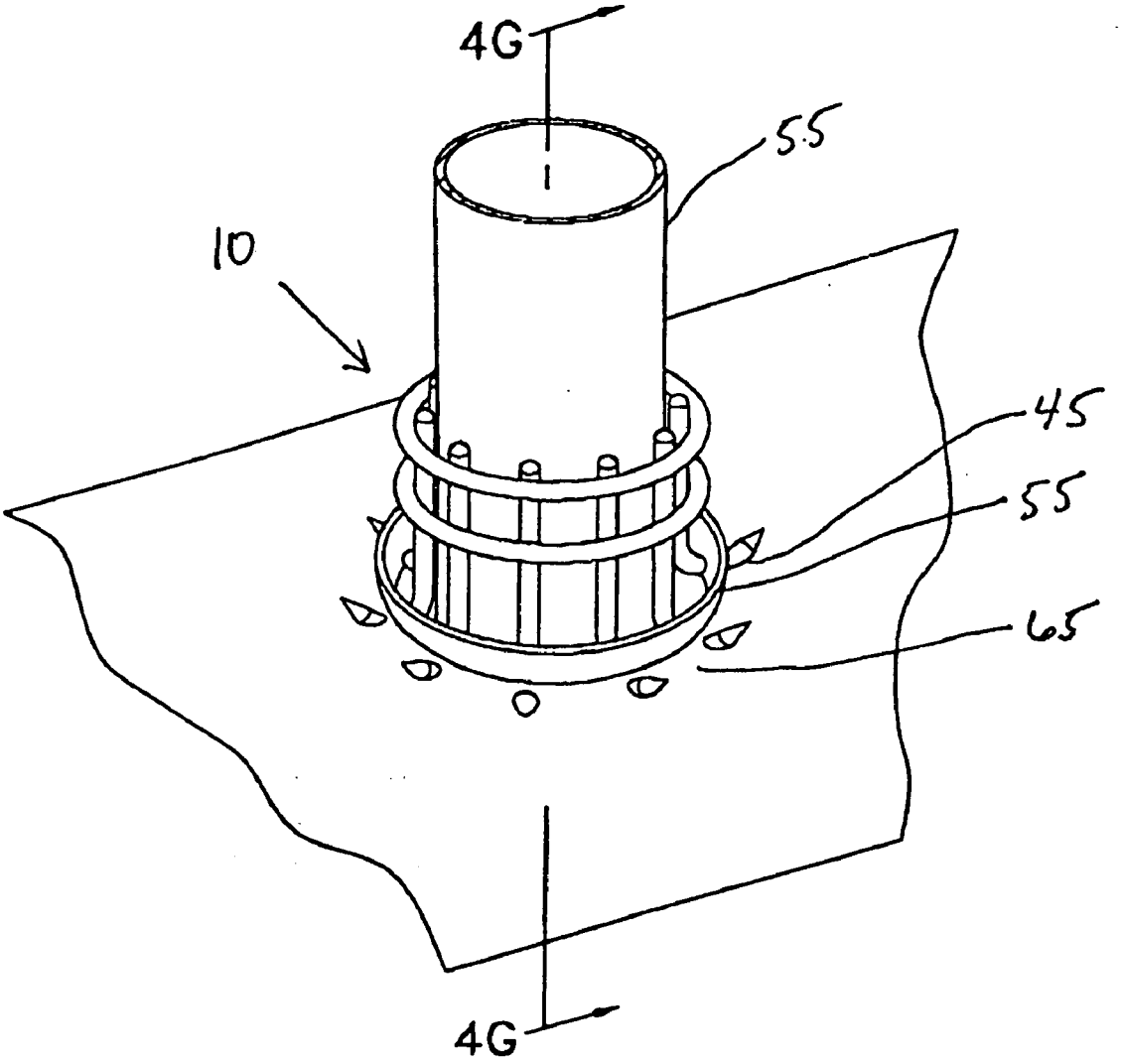


FIG. 4F

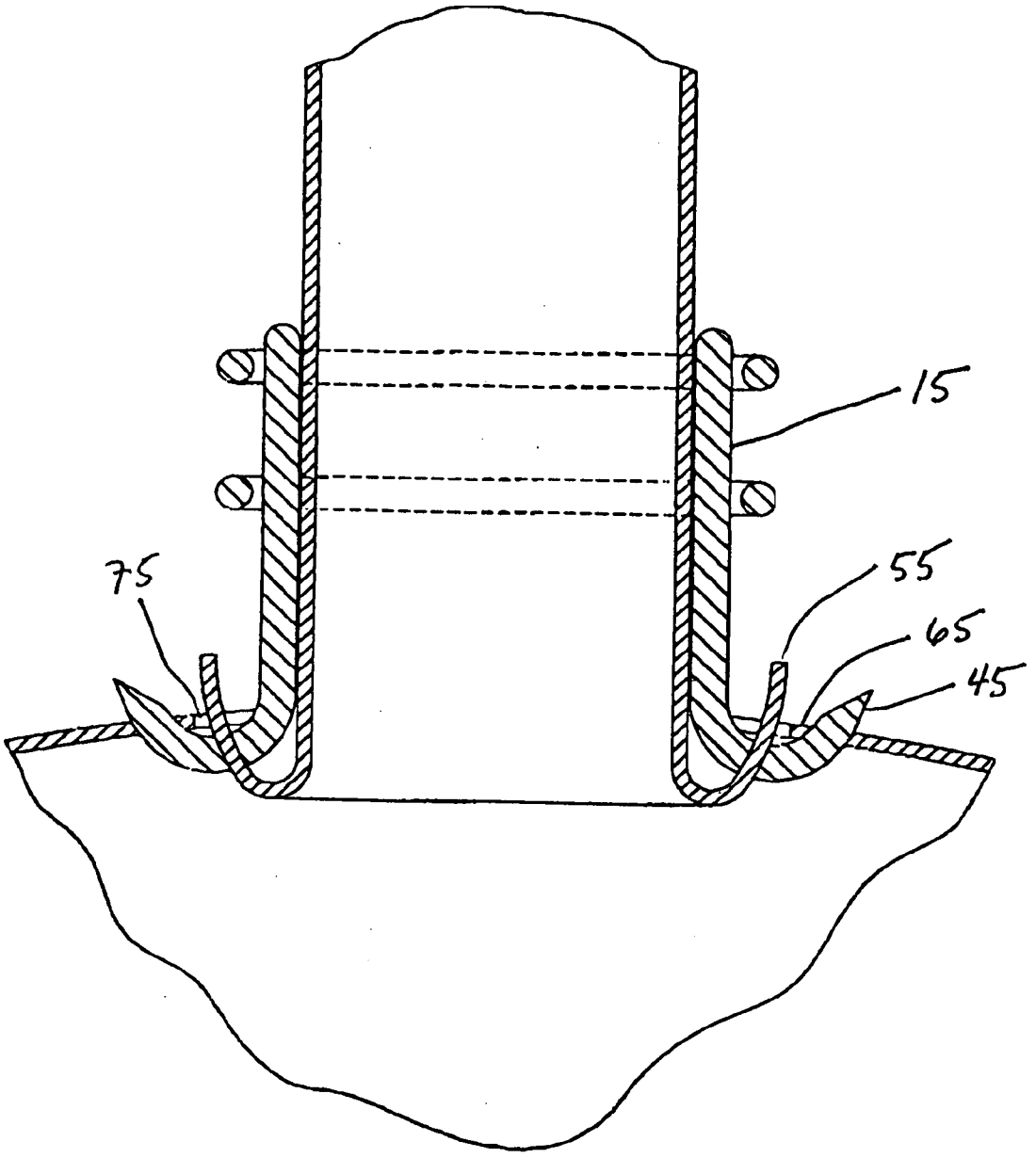


FIG. 4G

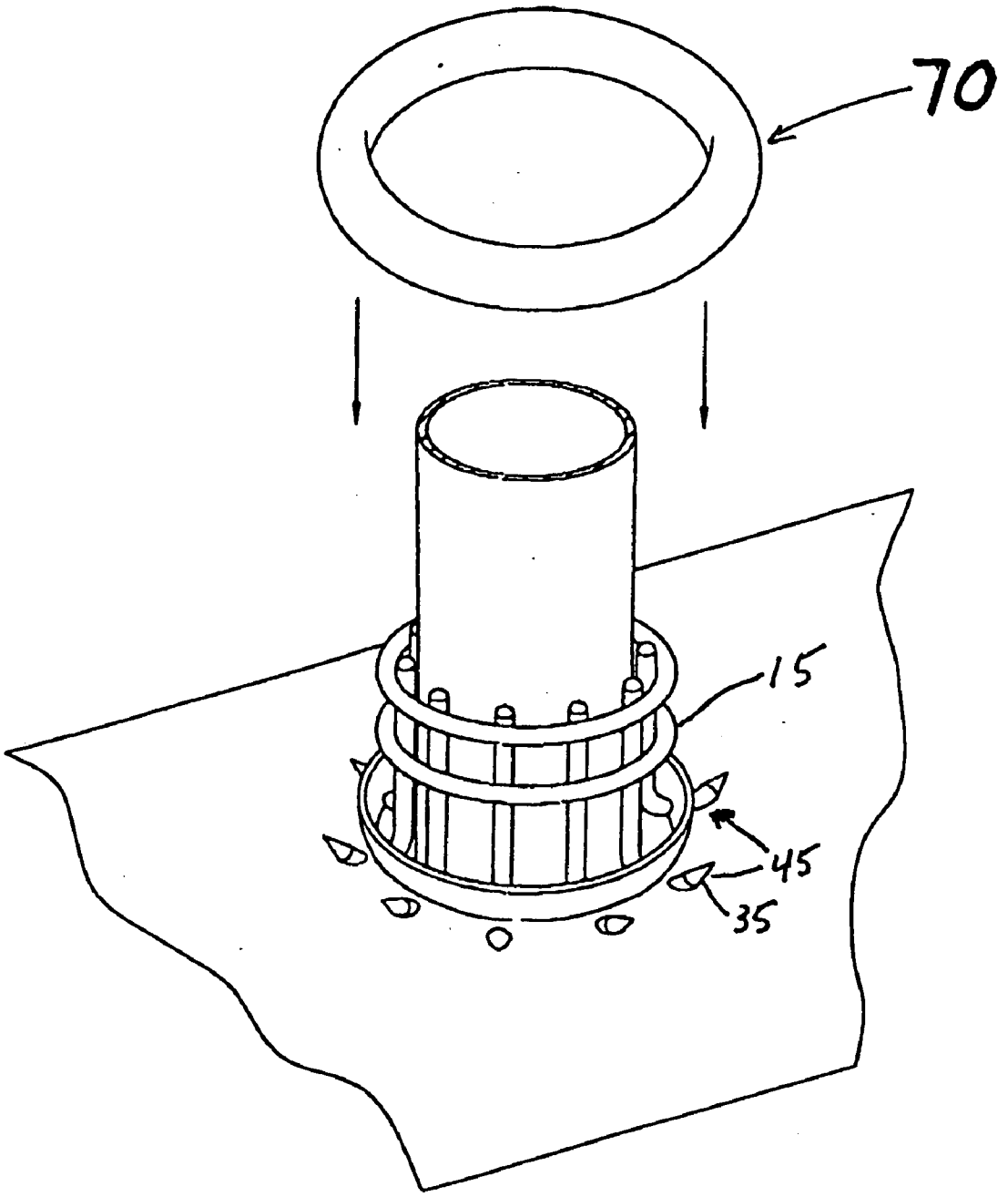


FIG. 4H

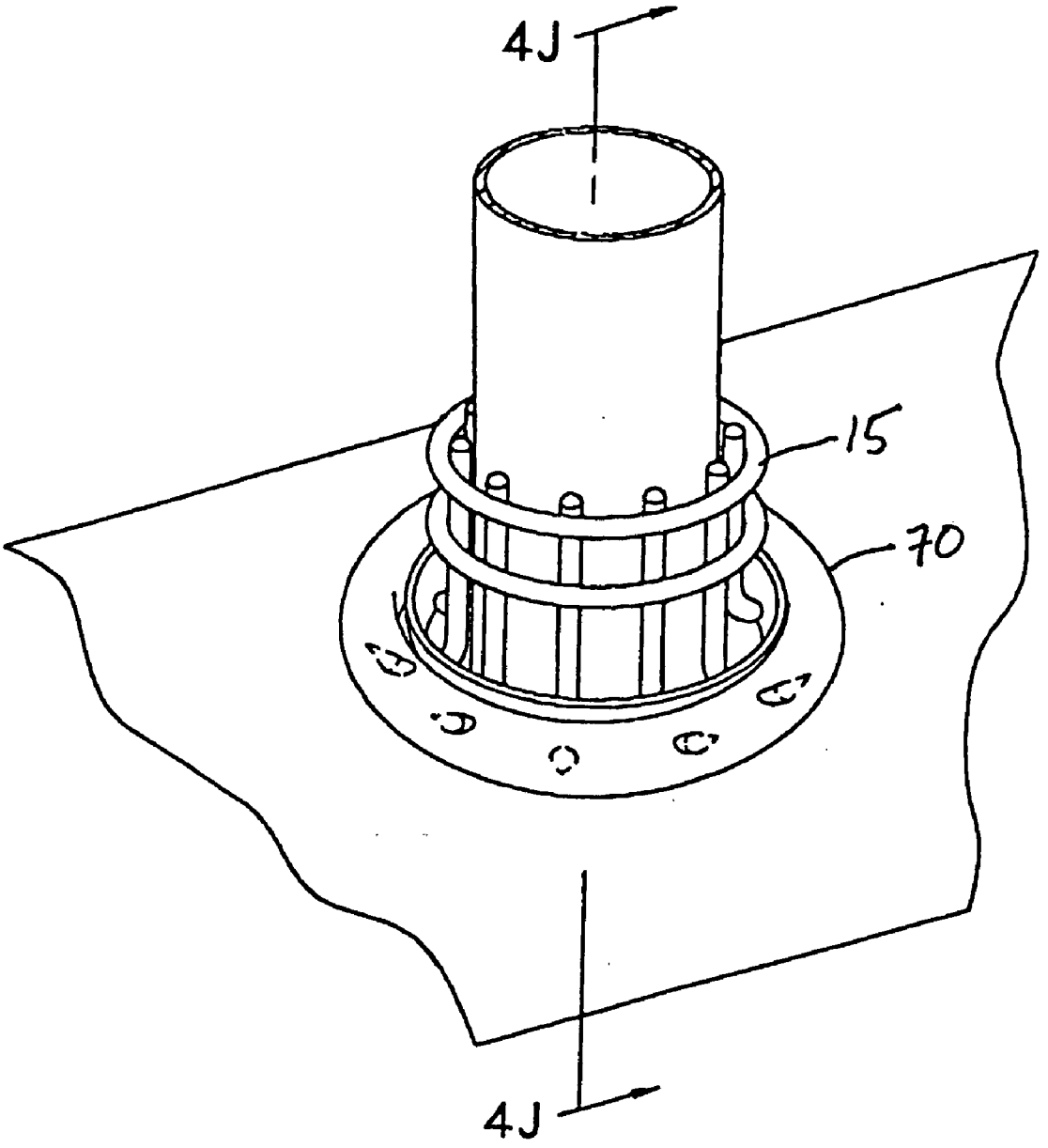


FIG. 41

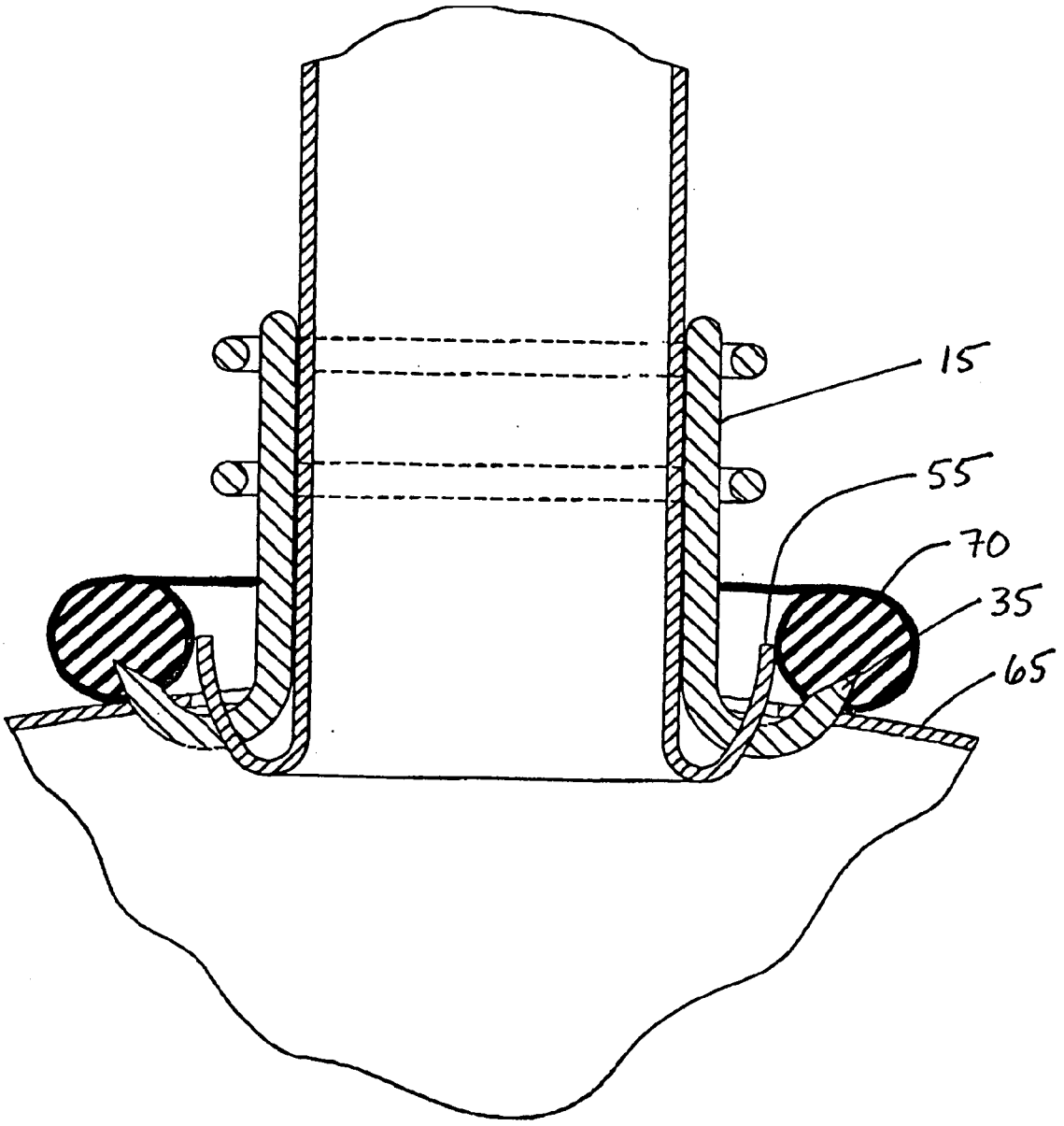


FIG. 4J

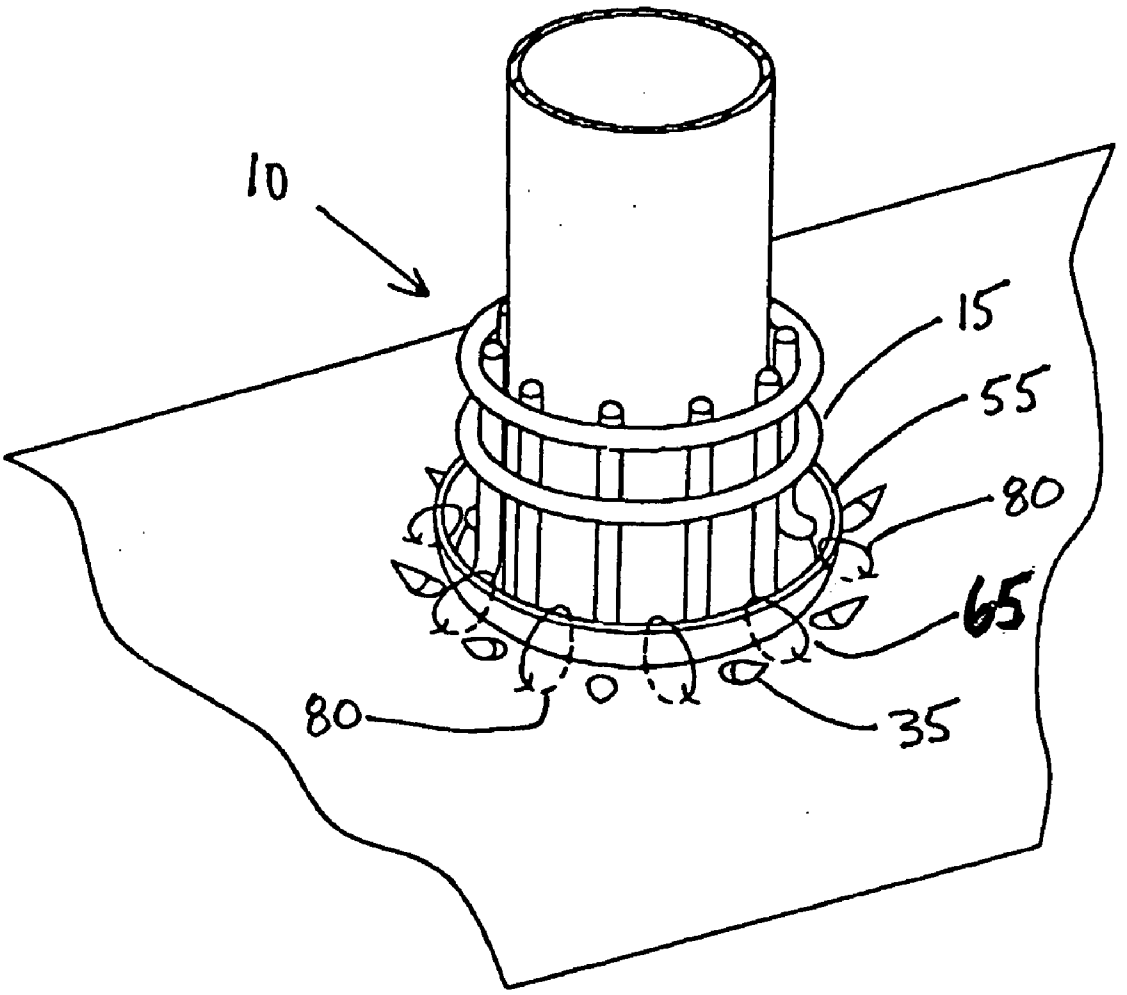


FIG. 4K

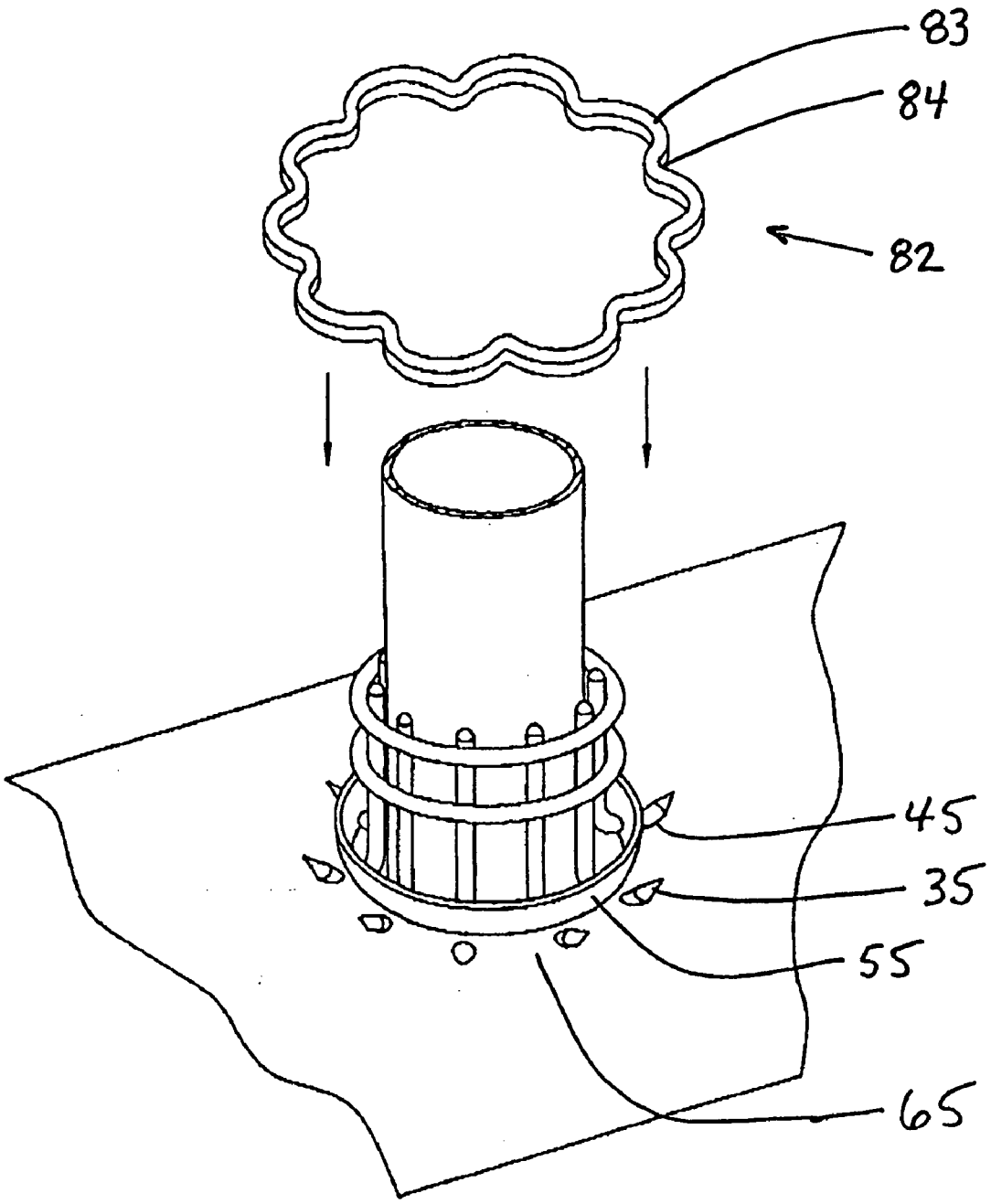


FIG. 4L

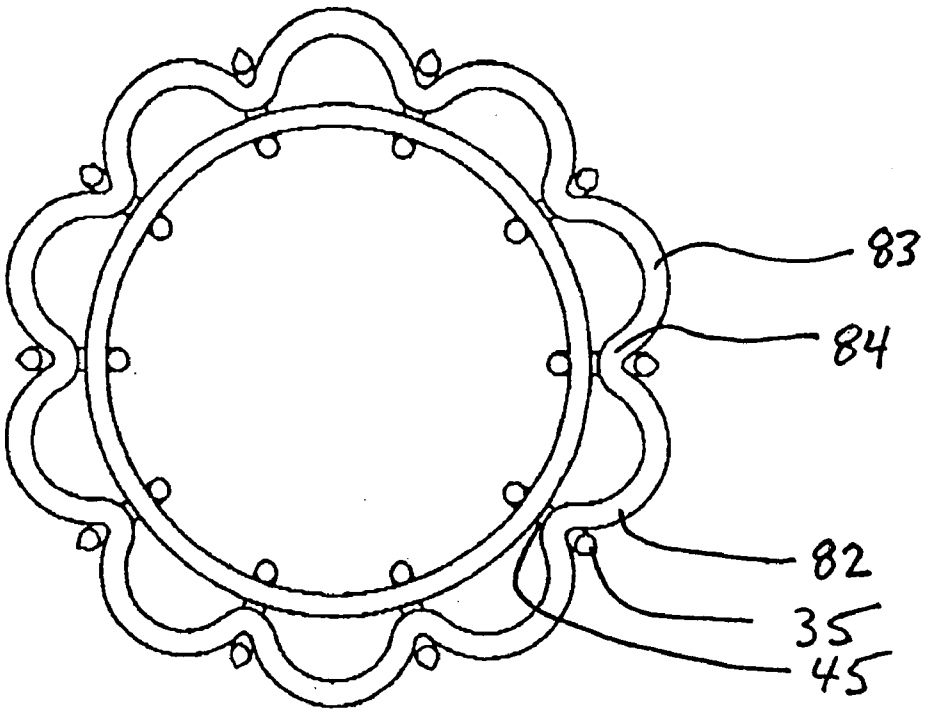


FIG. 4M

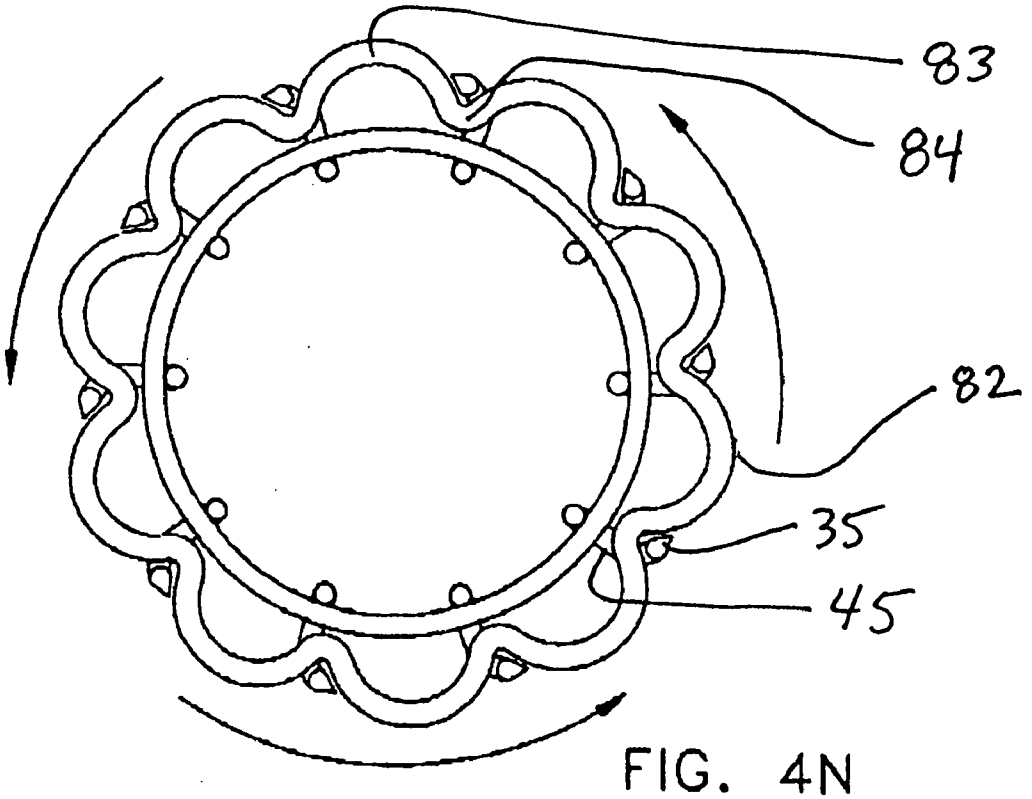


FIG. 4N

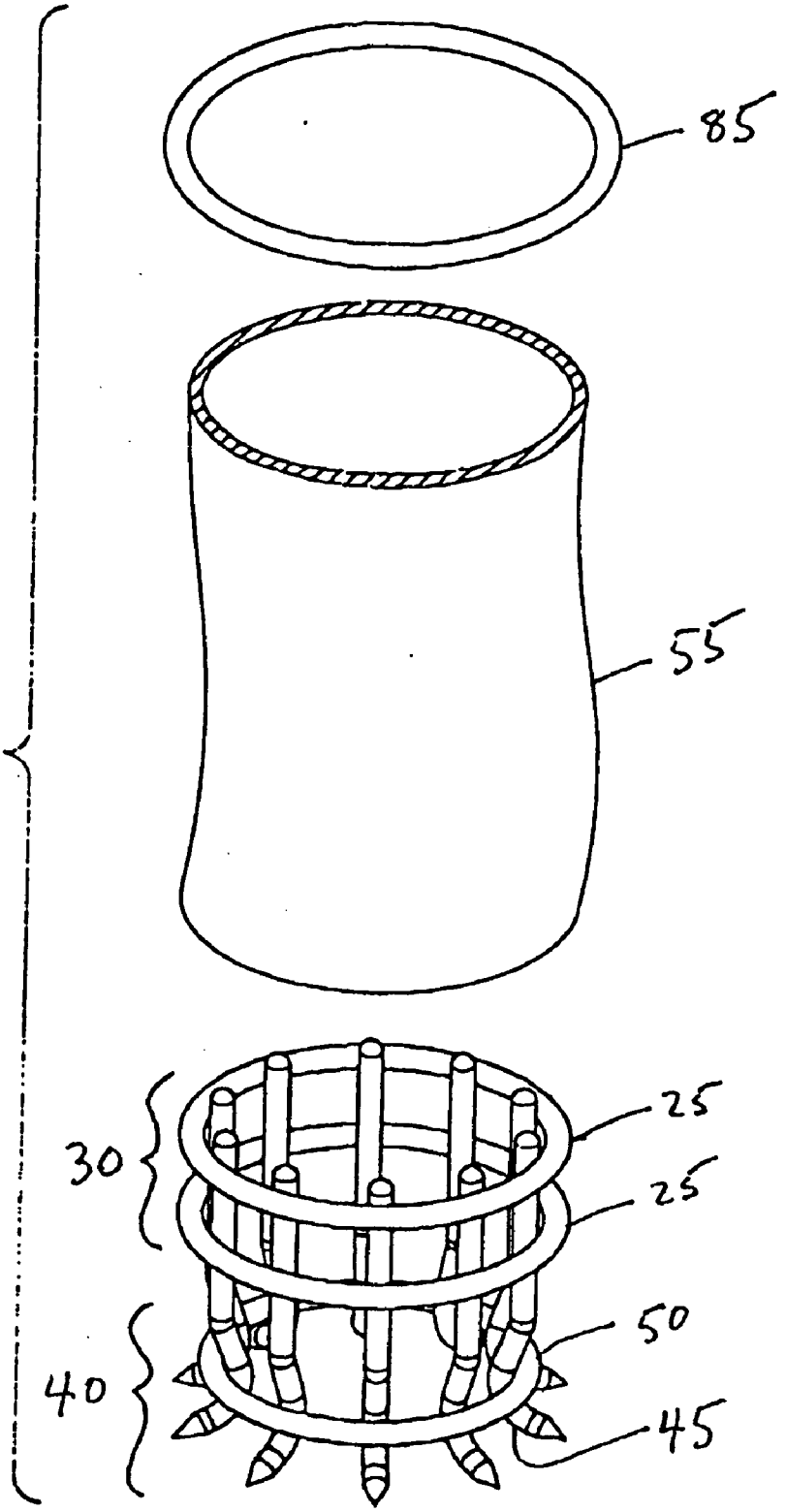


FIG. 5A

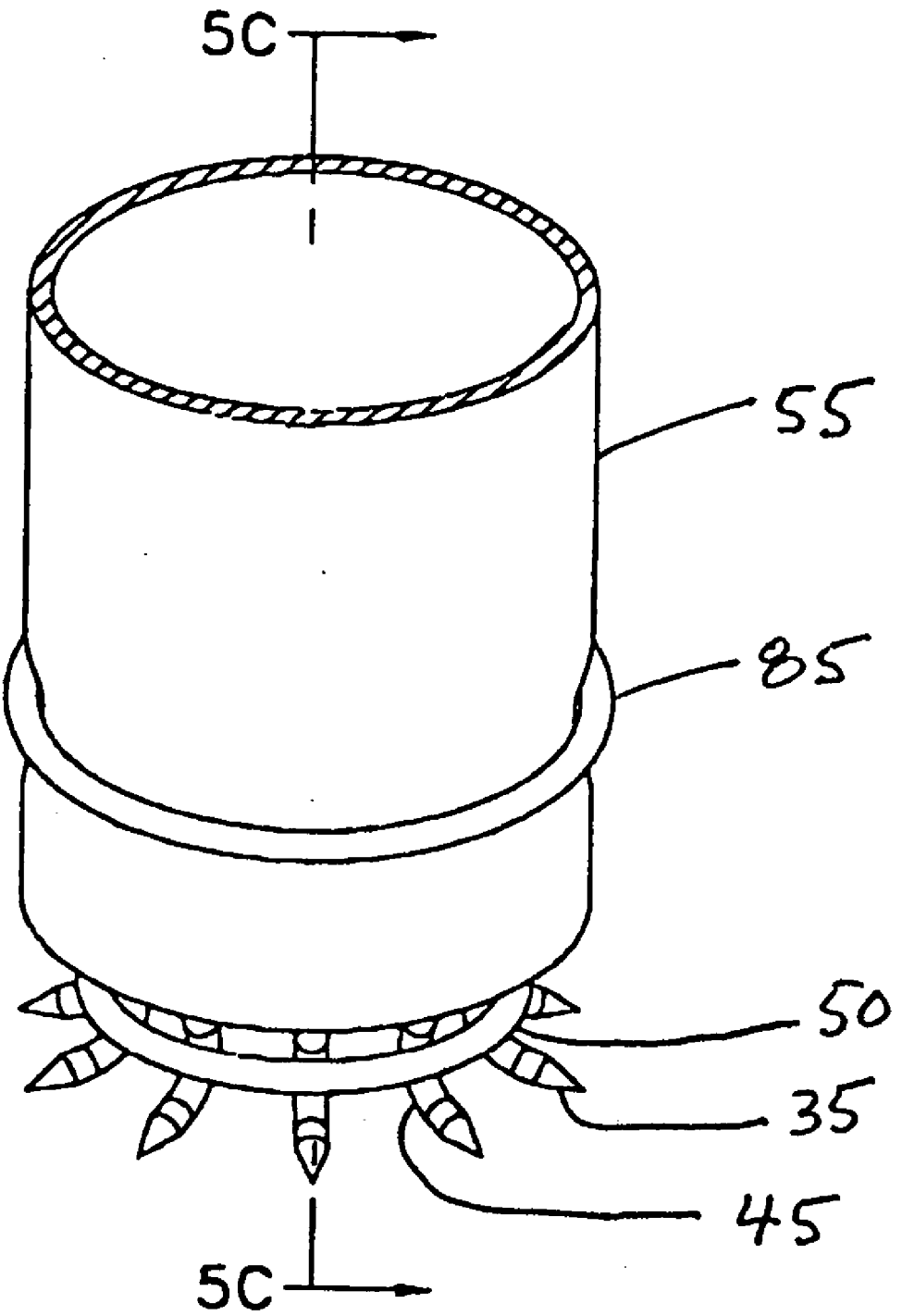


FIG. 5B

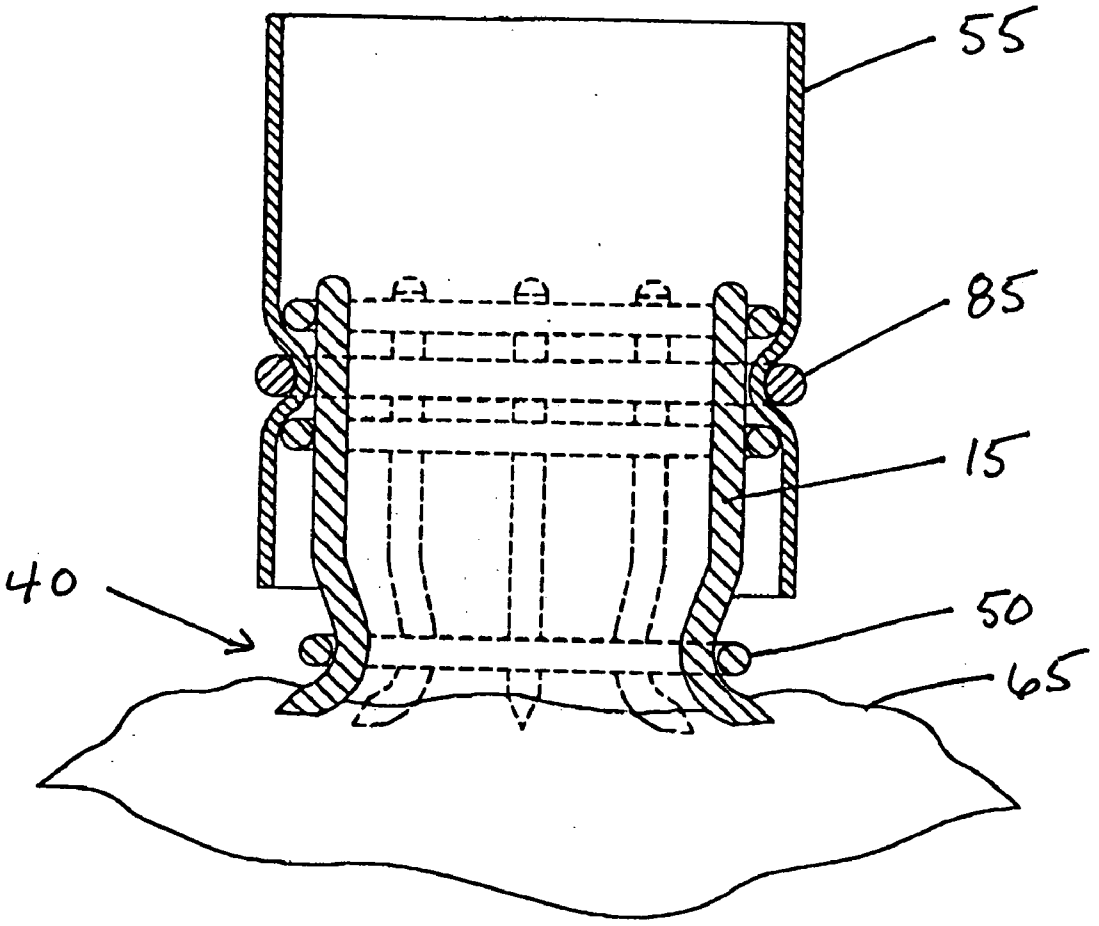


FIG. 5C

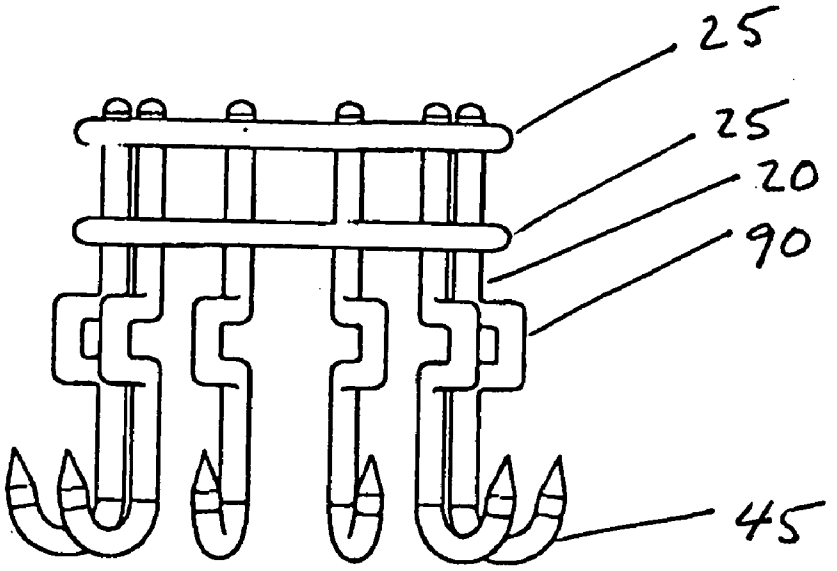


FIG. 6A

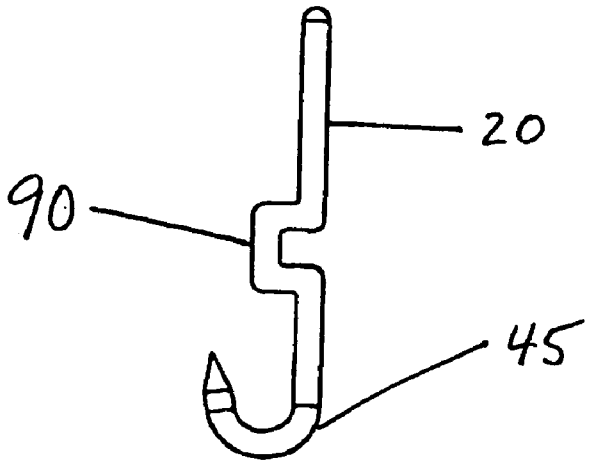


FIG. 6B

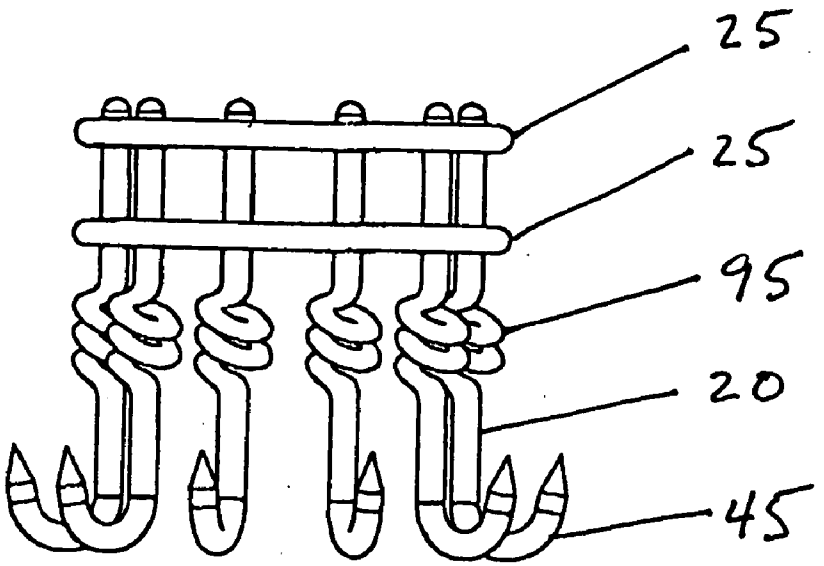


FIG. 7A

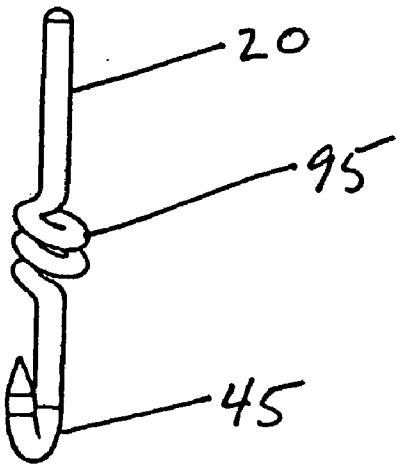


FIG. 7B

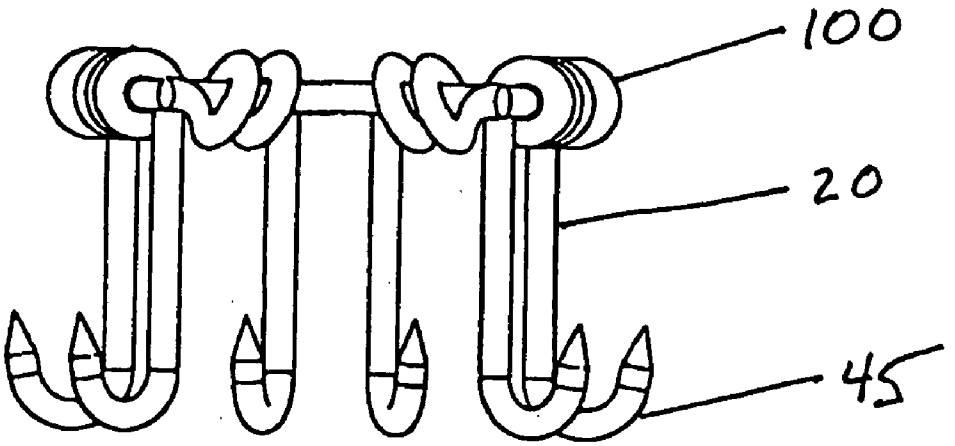


FIG. 8A

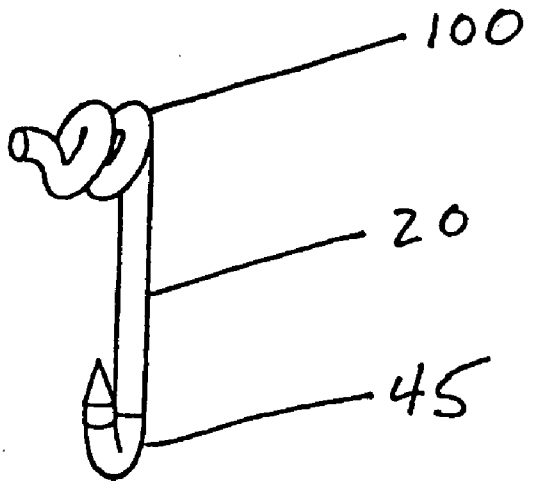


FIG. 8B

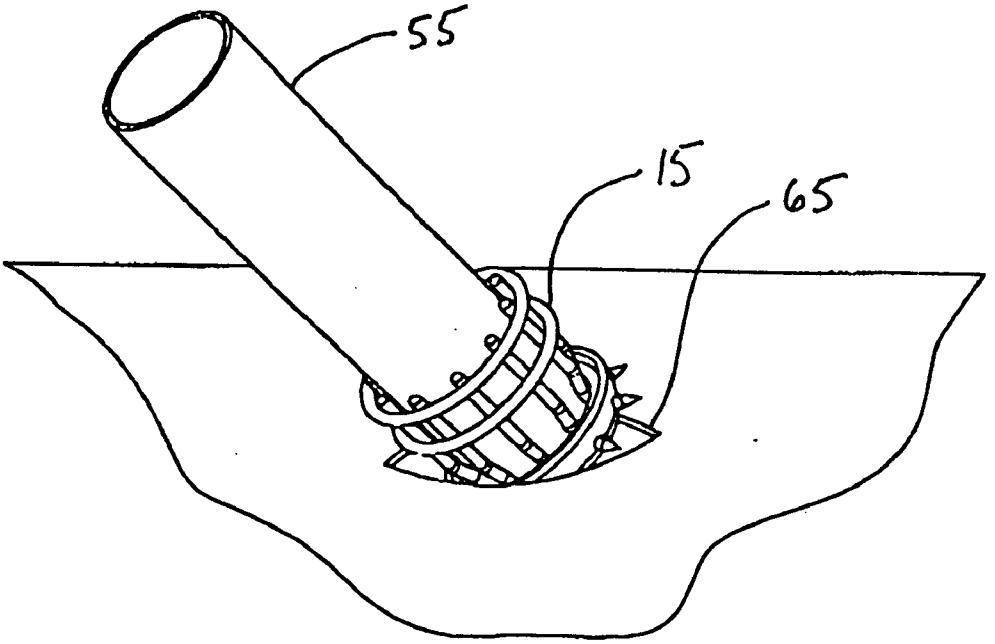


FIG. 9

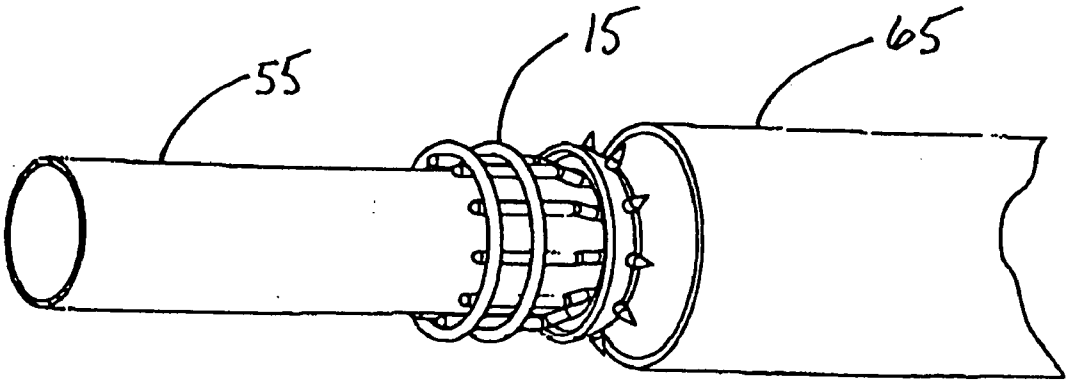


FIG. 10

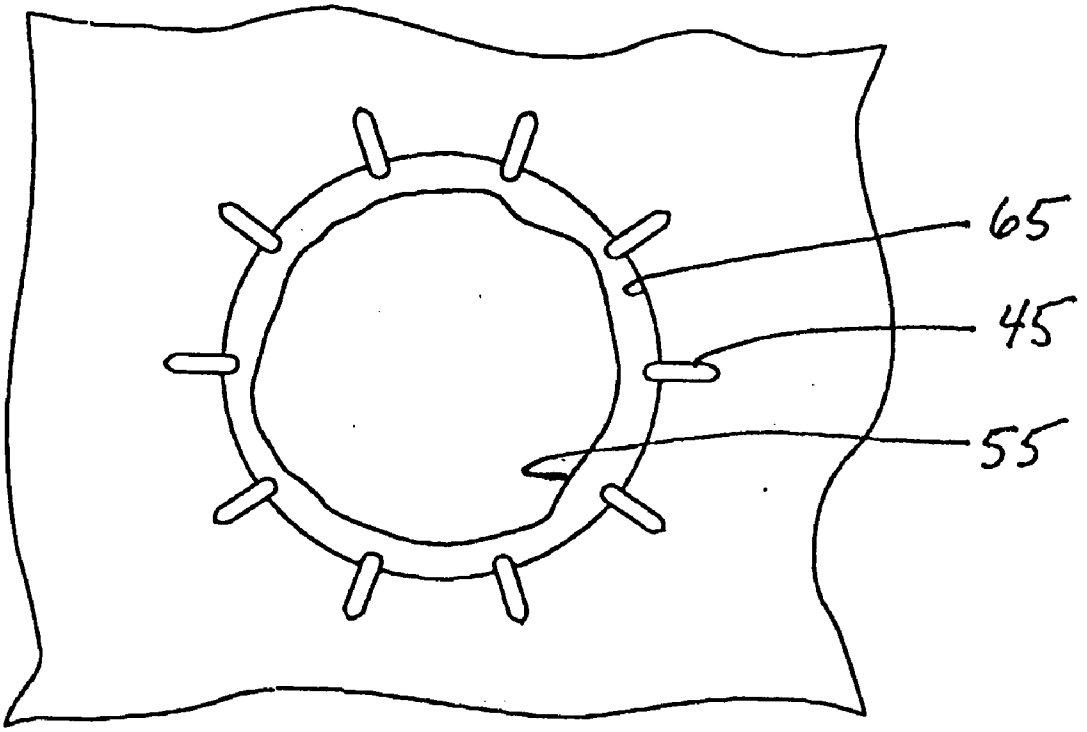


FIG. 11

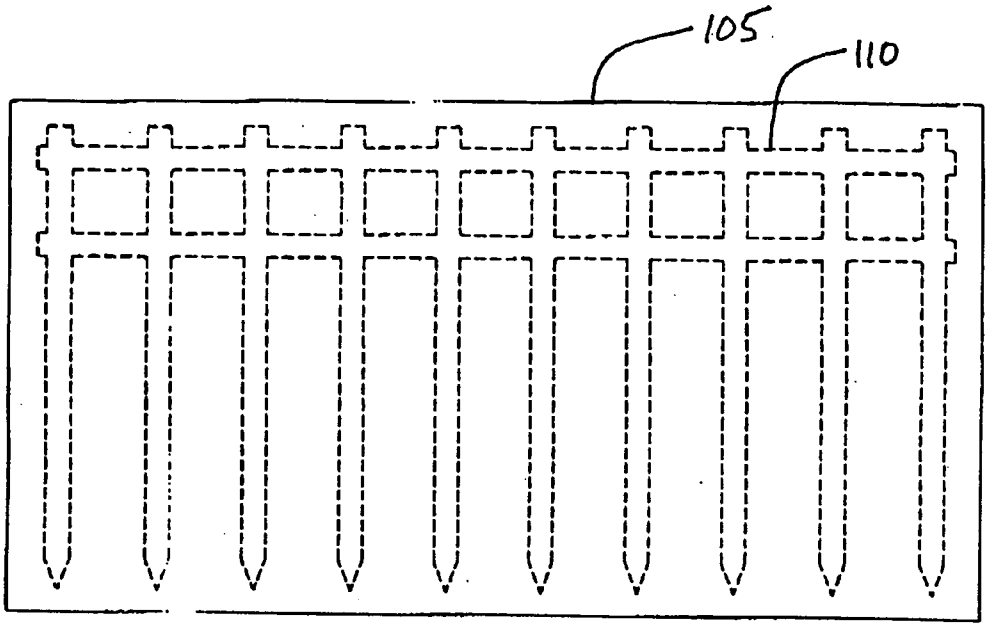


FIG. 12A

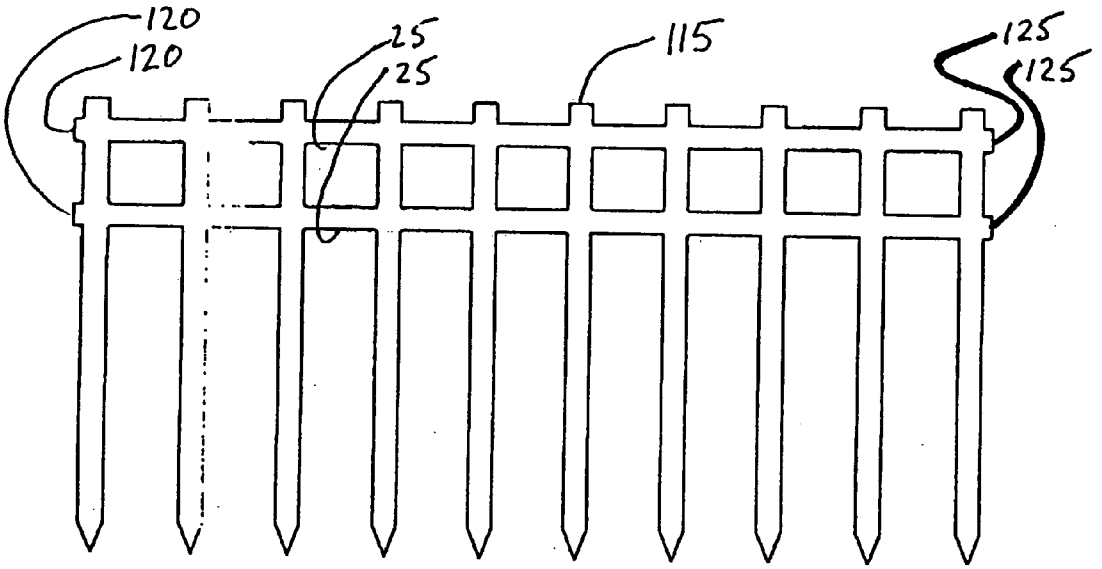


FIG. 12B

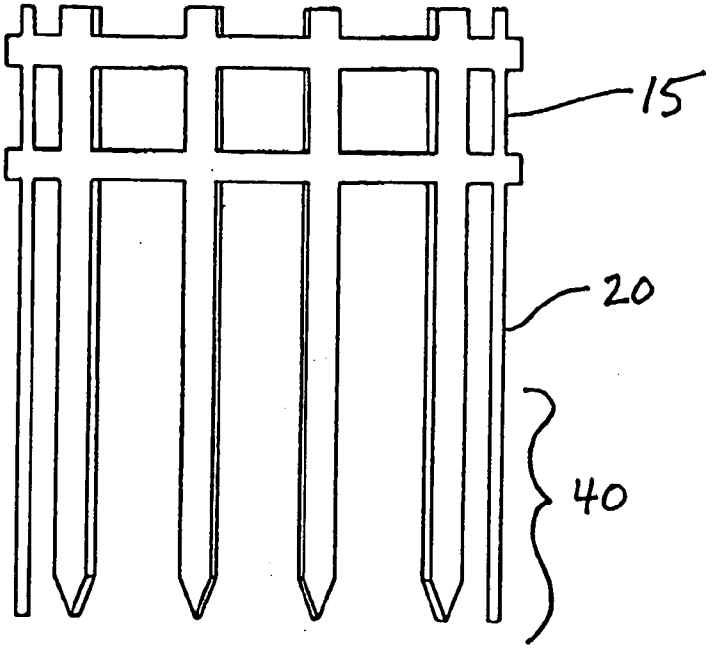


FIG. 12C

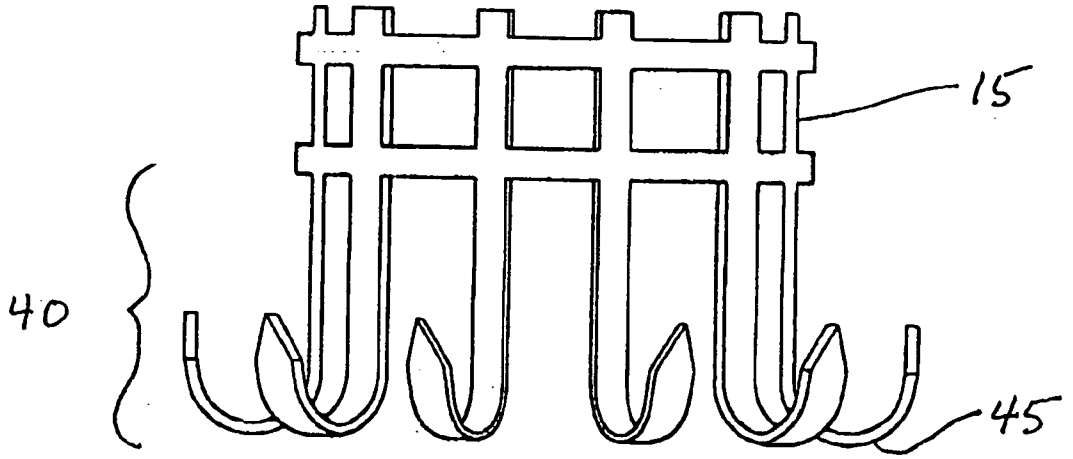


FIG. 12D

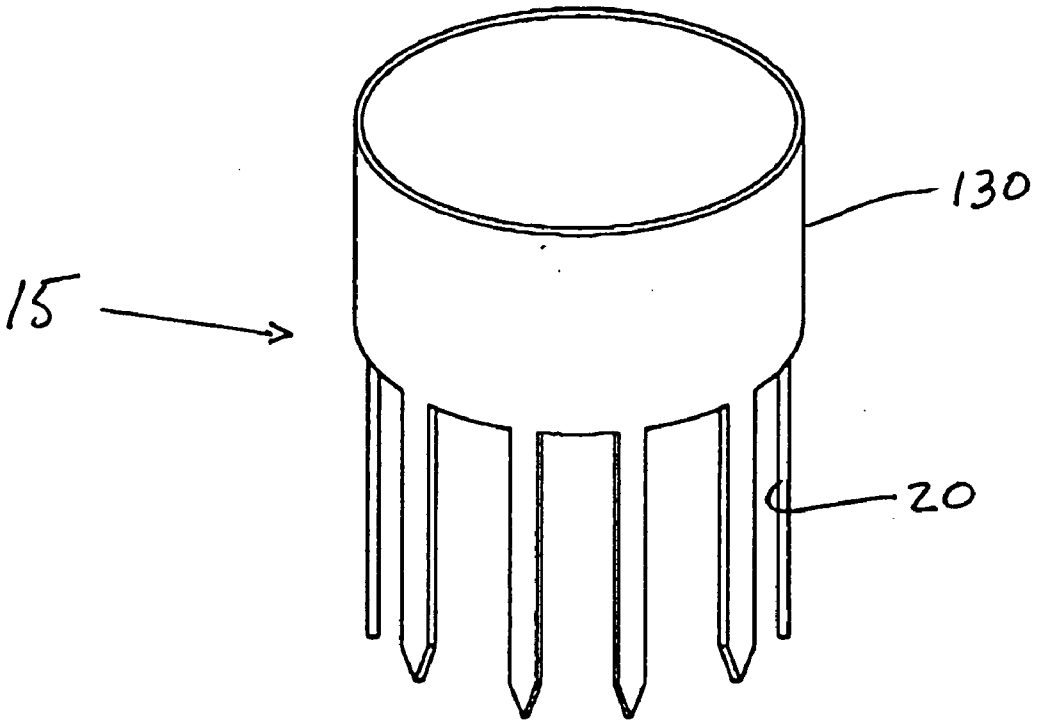


FIG. 13A

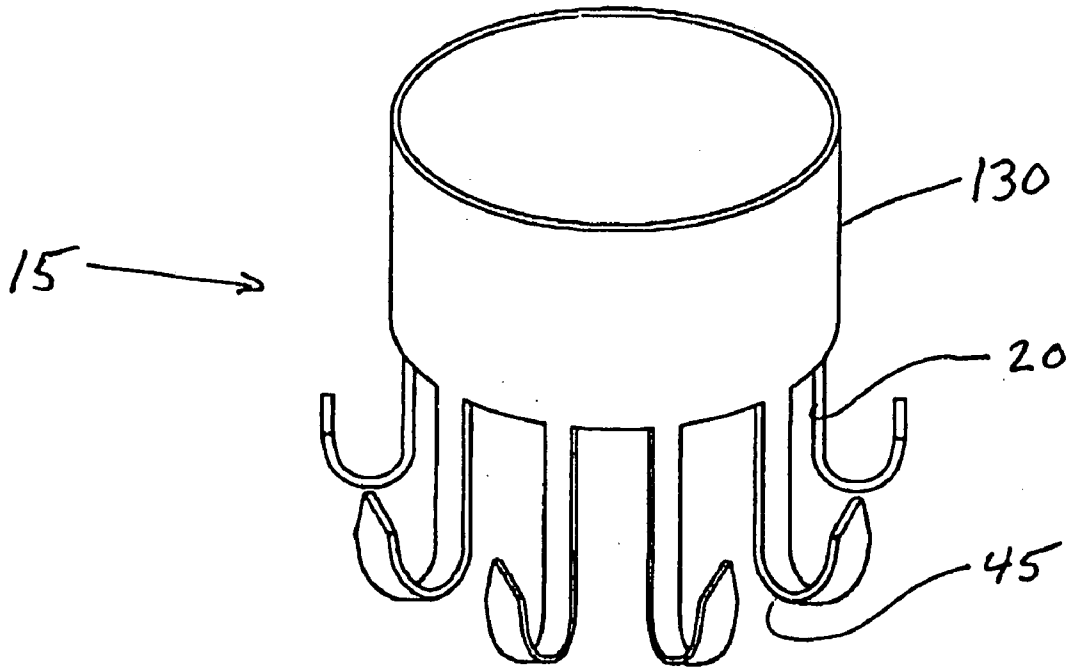


FIG. 13B

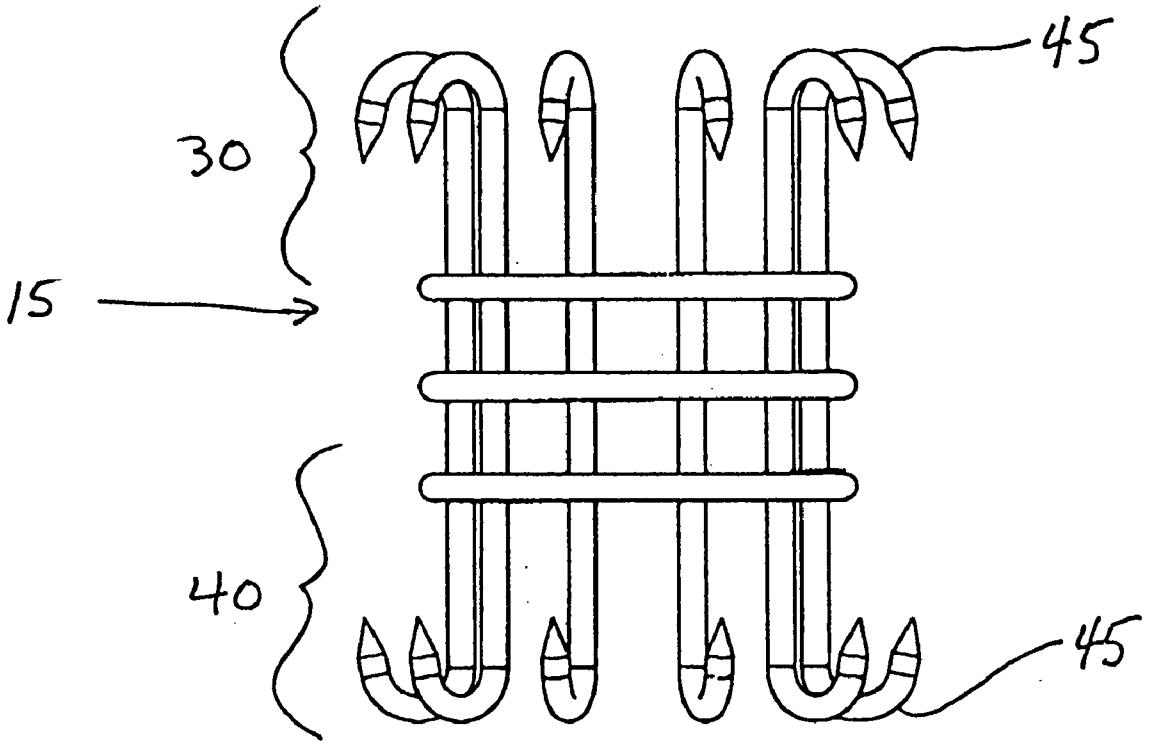


FIG. 14A

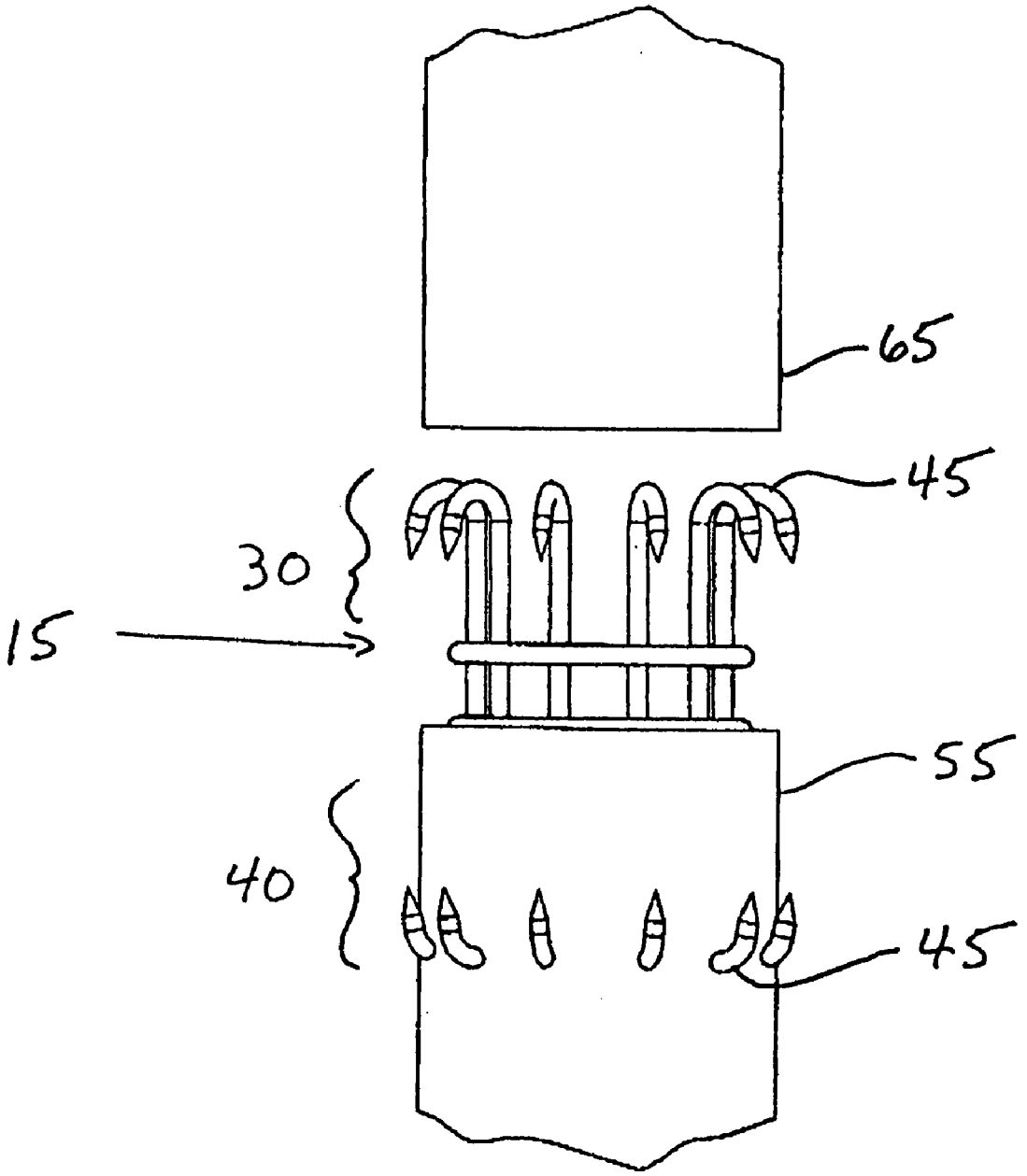


FIG. 14B

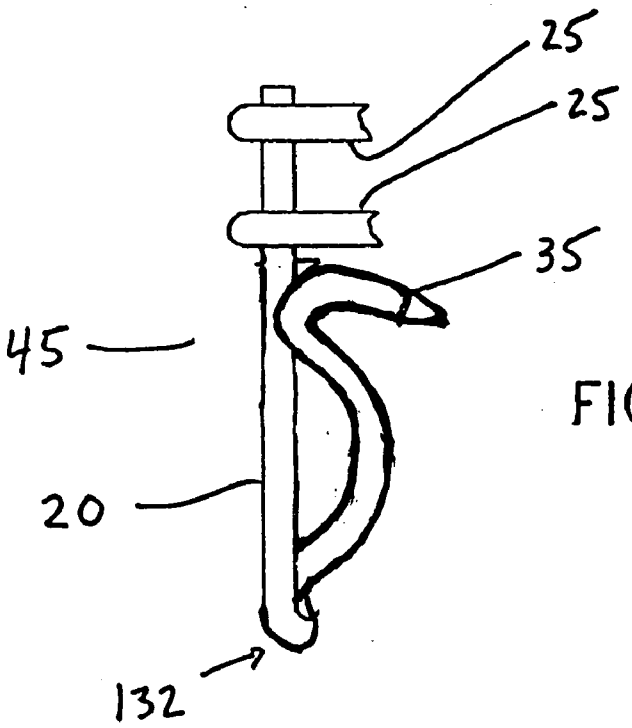


FIG. 15B

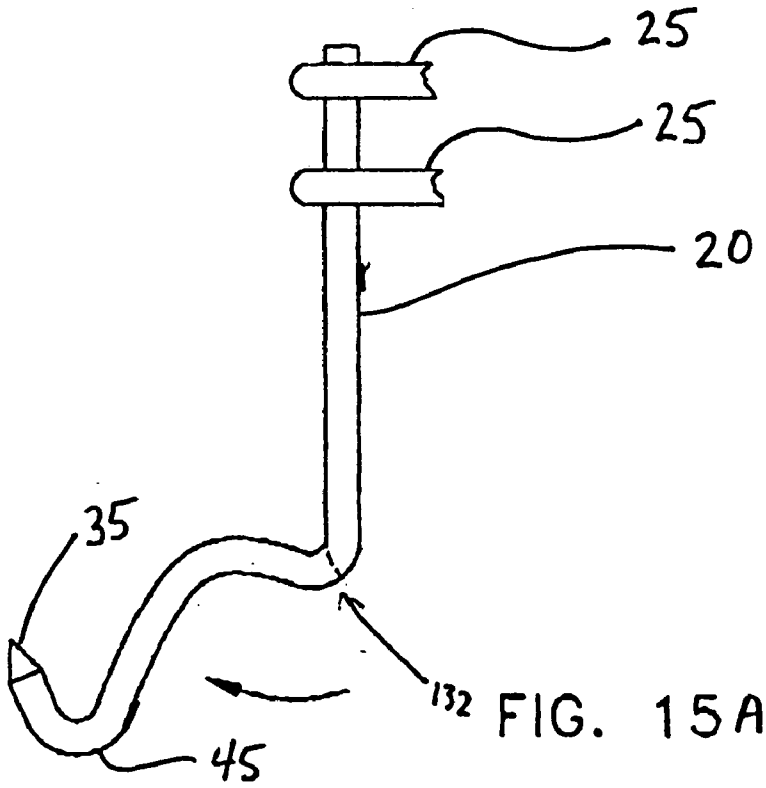


FIG. 15A

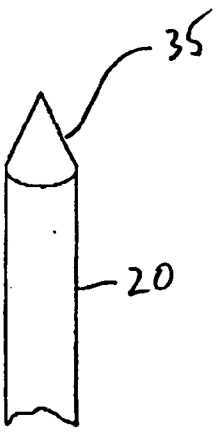


FIG. 16

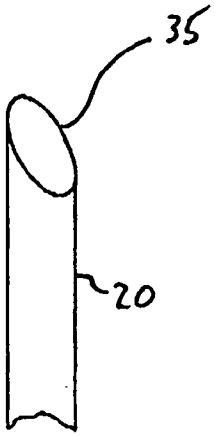


FIG. 17

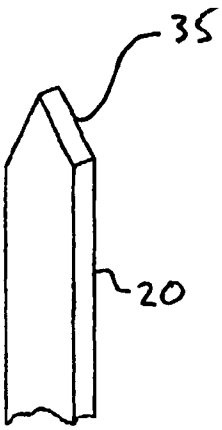


FIG. 18

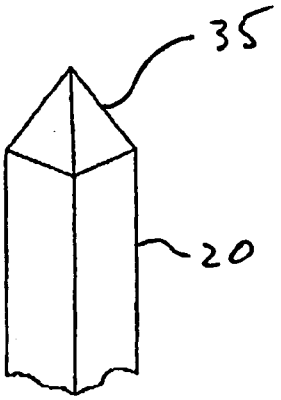


FIG. 19

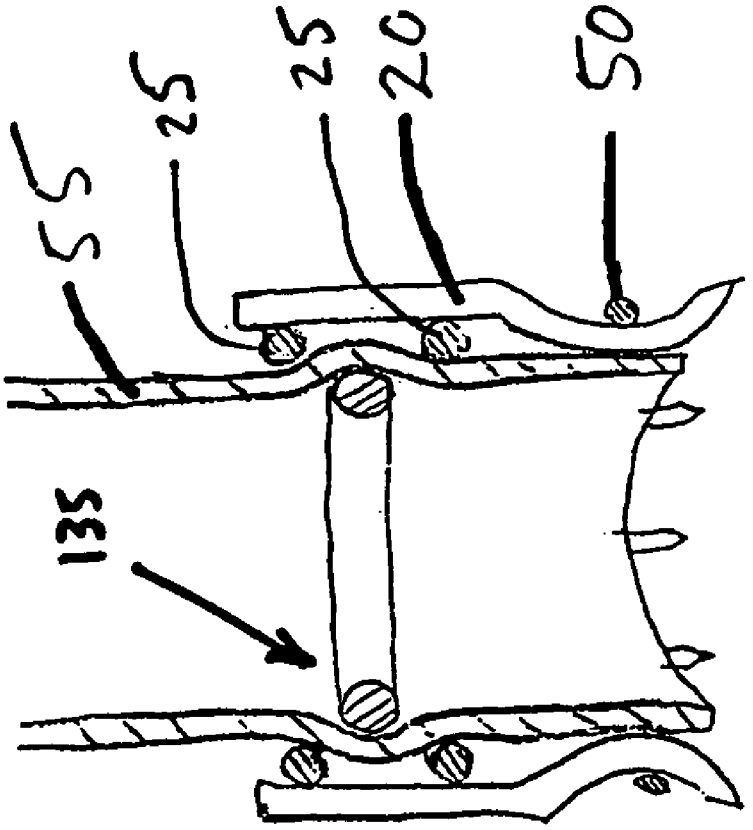


FIG. 20
External Version of Crown

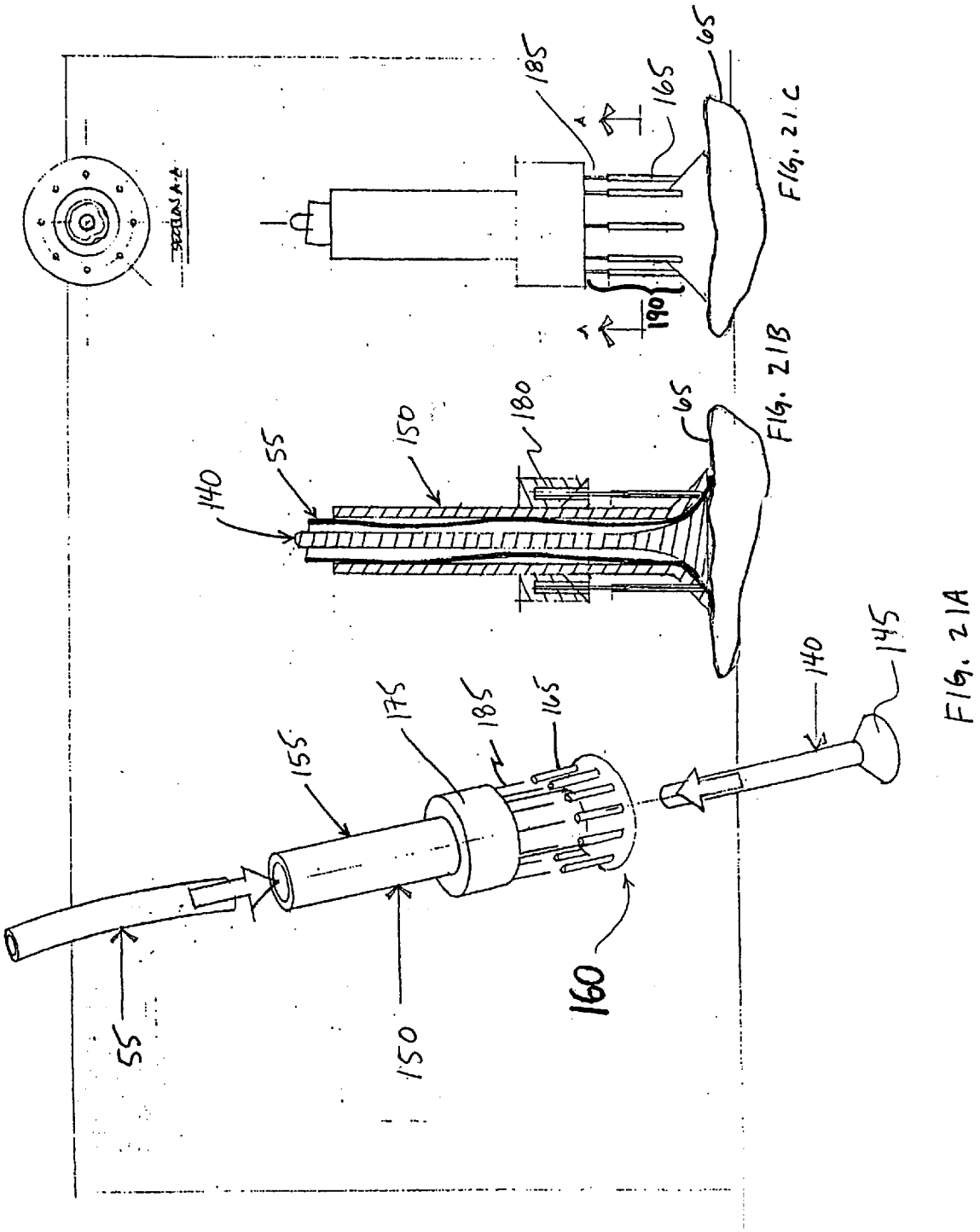


FIG. 21C

FIG. 21B

FIG. 21A

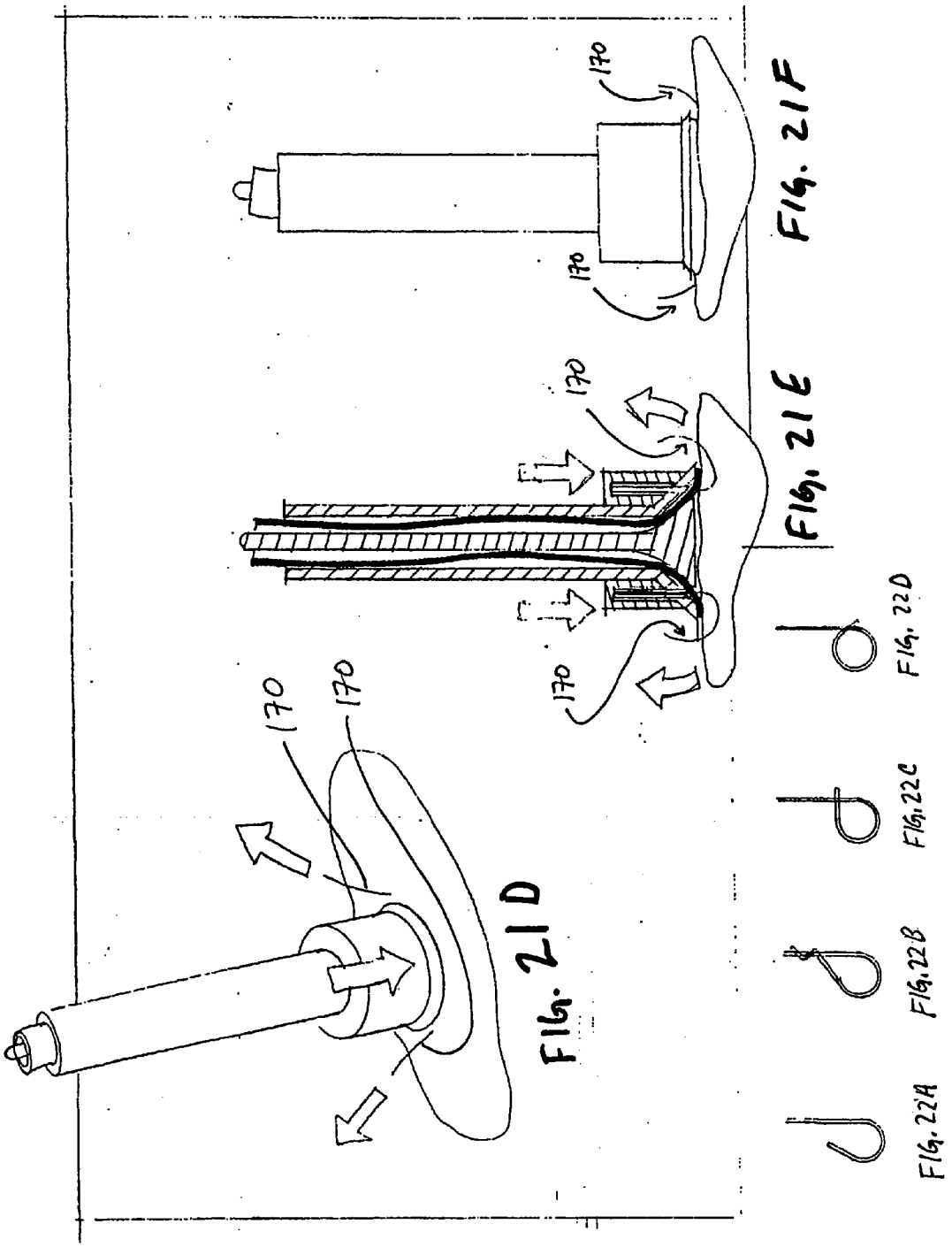


FIG. 21D

FIG. 21E

FIG. 21F

FIG. 22A

FIG. 22B

FIG. 22C

FIG. 22D

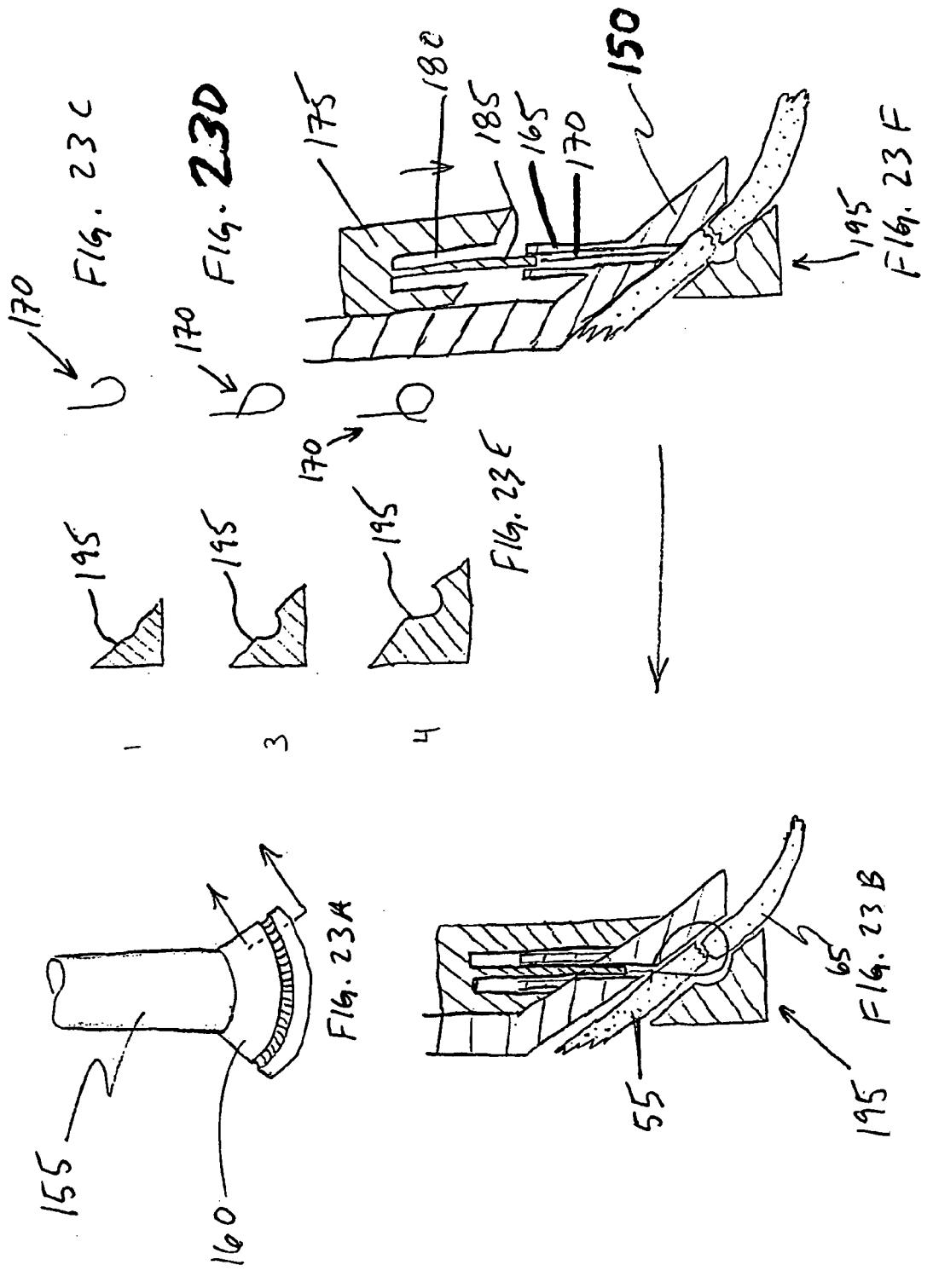
FIG. 23C
FIG. 23D
FIG. 23F
FIG. 23E
FIG. 23A
FIG. 23B
150
175
180
185
165
170
195
155
160
55
65
1
3
4

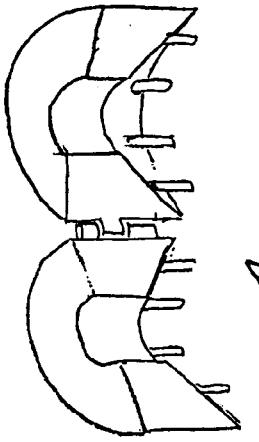


FIG. 24B

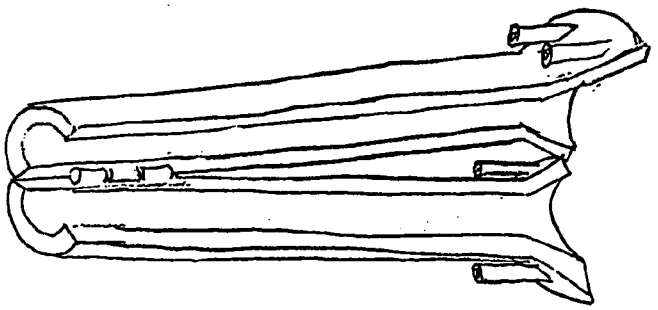


FIG. 24A

Inflatable Mandrel at the end of a Catheter

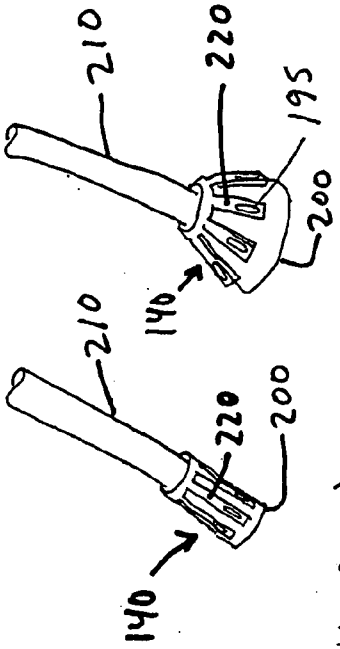


Inflated

FIG. 25B

Uninflated

FIG. 25A

# APPARATUS AND METHOD FOR PLACING MULTIPLE SUTURES DURING ANASTOMOSIS

## REFERENCE TO EARLIER APPLICATION

[0001] This application claims the benefit of pending U.S. Provisional Patent Application Serial No. 60/163,680, filed Nov. 5, 1999 by Gregory E. Sancoff, John T. Rice and Frederic P. Field. The aforementioned document is incorporated herein by reference.

## FIELD OF THE INVENTION

[0002] The invention generally relates to apparatus and methods for surgery. More specifically, the invention relates to apparatus and methods for the surgical formation of anastomosis of physiological vessels.

## BACKGROUND OF THE INVENTION

[0003] It is a common surgical procedure to join together two or more surgical vessels such as intestines or blood vessels. The three main types of connections include: end-to-end, end-to-side, and side-to-side connections. As these structures often carry fluid, the connections formed must be at least substantially complete around the entire surface. Traditional means for connecting together these structures include the use of sutures or staples.

[0004] Placing sutures by hand around the circumference of a vessel is often very difficult and cumbersome due to various factors. These factors include space limitations at the typical surgical site and attachment of the desired surgical vessel to or containment within various other structures. Such limitations impede manipulation and cause difficulty in accessing remote sides of the desired surgical vessels.

[0005] Additionally, blood vessels such as the coronary arteries, or those vessels used to form bypasses, are small in diameter and have very thin walls. The thin walls cause these vessels to adopt a collapsed configuration during-handling which causes difficulty in handling and positioning the vessels.

[0006] An object of the invention is to provide an apparatus for placing multiple sutures during anastomosis of physiological vessels.

[0007] Another object of the invention is to provide a method for placing multiple sutures during anastomosis of physiological vessels.

## SUMMARY OF THE INVENTION

[0008] An apparatus for placing multiple sutures during anastomosis of physiological vessels includes a crown portion having a plurality of strands connected together by one or more circular bands. The strands each form a point at one end with a curved hook at the same end. The curved hook acts as a suture to retain one or more of the vessels.

[0009] An alternative embodiment includes a plurality of strands, or wires, that are inserted through one or more vessels to simultaneously place multiple sutures.

[0010] The present invention also comprises a method for placing a plurality of sutures simultaneously with an apparatus.

## BRIEF DESCRIPTION OF THE DRAWINGS

[0011] FIGS. **1A-1E** illustrate an embodiment of a crown for placing multiple sutures.

[0012] FIGS. **2A-2D** illustrate a crown including a retaining ring.

[0013] **FIG. 3** illustrates a crown including a handle.

[0014] FIGS. **4A-4N** illustrate various embodiments of an apparatus for surgical anastomosis using an eversion technique.

[0015] FIGS. **5A-5C** illustrate an internal version of a crown.

[0016] FIGS. **6A-6B**, **7A-7B** and **8A-8B** illustrate various embodiments of strands having structures for additional flexibility.

[0017] FIGS. **9-11** illustrate various eversion techniques using a crown.

[0018] FIGS. **12A-12D** illustrate a crown formed of a planar material.

[0019] FIGS. **13A-13B** illustrate a crown having a unitary ring structure.

[0020] FIGS. **14A-14B** illustrate an embodiment of the invention with hooks at both ends of a crown.

[0021] FIGS. **15A-15B** illustrate an embodiment of the invention with a self-locking hook.

[0022] FIGS. **16-19** illustrate various pointed ends of a strand.

[0023] **FIG. 20** illustrates an external version of a crown.

[0024] FIGS. **21A-21F** illustrate a device that places and secures sutures for making anastomotic connections.

[0025] FIGS. **22A-22D** illustrate various wire end configurations.

[0026] FIGS. **23A-23F** illustrate various die surface embodiments of a device that places and secures sutures for making anastomotic connections.

[0027] FIGS. **24A-24B** illustrate embodiments of a hinged device that places and secures sutures for making anastomotic connections.

[0028] FIGS. **25A-25B** illustrate an inflatable mandrel at the end of a catheter for a device that places and secures sutures for making anastomotic connections.

## DETAILED DESCRIPTION OF THE PREFERRED EMBODIMENTS

[0029] Referring to FIGS. **1-3**, an apparatus **10** is shown for surgical formation of an anastomosis. In a preferred embodiment, apparatus **10** includes a crown **15** with a plurality of strands **20** joined together by at least two rings **25**. Each strand **20** is joined to rings **25** adjacent a first end **30** and has a pointed barb **35** at a second end **40**. Strand **20** includes a curved portion **45** adjacent barb **35** and second end **40**. Curved portion **45** may be in the form of a hook.

[0030] Now looking at **FIG. 2A**, crown **15** is shown with a retaining ring **50** for restraining hooks **45** of each strand **20**. Retaining ring **50** allows positioning of second end **40** of

crown **15** adjacent tissue of physiological vessels. Removal of retaining ring **50** causes deployment of hooks **45** which secure to one, or more, physiological vessels.

[**0031**] **FIGS. 3 and 4A-4N** illustrate a method for surgical formation of an anastomosis of vessels, referred to as an eversion technique.

[**0032**] In **FIG. 3**, apparatus **10** is positioned over one end of a physiological vessel **55** and a scope **60** positioned therethrough is shown. A handle **56** attached to crown **15** is provided to manipulate apparatus **10**. Handle **56** contains a separation means **57** which includes, but is not limited to, a prefabricated breaking point.

[**0033**] In **FIG. 4A**, the progression of crown **15** up the length of vessel **55** is shown. After crown **15** is positioned a suitable distance along vessel **55**, the end of vessel **55** is folded back and impaled upon hooks **45** as shown in **FIG. 4B**. Next, crown **15** surrounding vessel **55** is positioned within physiological vessel **65** as shown in **FIG. 4D** and as shown in a cross-sectional view in **FIG. 4E**. Retaining ring **50** is shown in the cross-sectional view of **FIG. 4E** and is accessible to the outside of the apparatus **10**. Retaining ring **50** is removed by cutting therethrough. Alternatively, retaining ring **50** may be removed from hooks **45** by other methods such as repositioning to an area adjacent rings **25**.

[**0034**] Now looking at **FIGS. 4F and 4G**, apparatus **10** is shown after retaining ring **50** is removed and hooks **45** are driven through vessel **65**. As shown in **FIG. 4G, a** gap **75** may be created between vessel **55** and vessel **65** during the eversion technique.

[**0035**] In one embodiment of the invention, a sealing ring **70** is also used in conjunction with crown **15** to form apparatus **10**, as illustrated in FIGS. **4H-4K**. Sealing ring **70** is formed of a puncturable, implantable material such as an elastic material including, but not limited to, plastic or elastomer.

[**0036**] Looking again at **FIG. 4G**, the gap **75** between vessel **55** and vessel **65** created by the eversion technique is shown. In order to eliminate gap **75**, and protect hooks **45**, sealing ring **70** is placed onto crown **15** as shown in **FIGS. 4H and 4I**. Now looking at **FIG. 4J**, it can be seen that the outer surface of sealing ring **70** contacts vessel **55** and vessel **65** as sealing ring **70** is impaled onto pointed barbs **35**. This simultaneous contact eliminates any passageway created by gap **75**. Additionally, sealing ring **70** having an appropriately sized cross-sectional radius can also contact crown **15** above hooks **45** in addition to vessel **55** and vessel **65** to provide a more secure seal of gap **75**.

[**0037**] Now looking at **FIG. 4K**, an alternative embodiment includes a plurality of sutures **80**, placed around apparatus **10** to close gap **75** between vessel **55** and vessel **65**. Sealing ring **70** may also be used as described above for protection of pointed barbs **35** in addition to the placement of sutures **80** for closure of gap **75**.

[**0038**] Referring to FIGS. **4L-4N**, another preferred embodiment including a clover leaf bender **82** to drive the ends of hooks **45** containing pointed barb **35** toward vessel **65** is shown. Clover leaf bender **82** is formed with a series of protrusions **83** and recesses **84**. As shown in **FIG. 4L**, clover leaf bender **82** is placed around crown **15** after vessel **55** and vessel **65** are attached to one another. Now looking at **FIG. 4M**, recesses **84** contain the outwardly extending ends of hooks **45** with protrusions **83** therebetween. Next, clover leaf bender **82** is rotated, as shown in **FIG. 4N**, to drive the ends of hooks **45** radially and downwardly toward vessel **65**. In one embodiment of the invention, clover leaf bender **82** is turned to drive the ends of hooks **45** substantially parallel to vessel **65** and is then removed from crown **15**. In another embodiment, clover leaf bender **82** is turned only enough to deflect the outwardly extending ends of hooks **45** and is left in contact with hooks **45**. Clover leaf bender **82** acts in a similar manner as sealing ring **70** when left in attachment to crown **15**.

[**0039**] FIGS. **5A-5C** illustrate an alternative arrangement in which crown **15** is placed within physiological vessel **55**. As shown in **FIG. 5A**, lock ring **85** is provided to secure crown **15** within vessel **55** and hooks **45** are restrained by retaining ring **50** prior to insertion into vessel **65**. Now looking at **FIG. 5B**, first end **30** (shown in **FIG. 5A**) of crown **15** is shown inserted into vessel **55** with lock ring **85** securely fastened over vessel **55** between crown rings **25**. Hooks **45** are still restrained by retaining ring **50** for insertion of second end **40** (shown in **FIG. 5A**) of crown **15** into vessel **65**. Referring to **FIG. 5C**, second end **40** of crown **15** is shown during insertion into vessel **65**. Retaining ring **50** is removed, preferably by cutting, and hooks **45** deploy to secure crown **15** to vessel **65** as described above. In addition, other embodiments described herein, such as sealing ring **70** and/or sutures **80**, may be implemented to further seal together vessel **55** and vessel **65**.

[**0040**] Now looking at FIGS. **6A-6B**, **7A-7B** and **8A-8B**, alternative embodiments are shown which provide greater flexibility in strands **20** attaching hooks **45** to crown rings **25**. In **FIGS. 6A and 6B**, an embodiment is shown in which each of the strands **20** contains a bend **90** to provide additional flexibility. In **FIGS. 7A and 7B**, an embodiment is shown in which each of strands **20** contains a spring **95** to provide additional flexibility. In **FIGS. 8A and 8B**, an embodiment is shown in which each of strands **20** uses a spring structure **100** for attachment to one of crown rings **25**. Strand bend **90**, strand spring **95** and spring structure **100** are advantageous in that less force is required to position hooks **45** with retaining ring **50** or with any other instrument. Strand bend **90**, strand spring **95** and spring structure **100** also permit greater deflection without material failure of strand **20** and to increase the force of hooks **45** to penetrate vessel **65**.

[**0041**] Referring now to **FIG. 9**, vessel **55** and vessel **65** are shown attached together using the eversion technique at an angle relative to one another. In **FIG. 10**, vessel **55** and vessel **65** are shown being attached together using the eversion technique in series with each other. In **FIG. 11, a** view is shown looking from the inside of vessel **65** attached to vessel **55** with hooks **45** about the perimeter of the attachment.

[**0042**] Referring to FIGS. **12A-12D**, an alternative embodiment of an apparatus and method where crown **15** is stamped or etched from a sheet of material **105** is shown. In **FIG. 12A**, sheet **105** is shown intact before stamping or etching to create crown **15**. Phantom lines **110** on sheet **105** depict the configuration of the stamping or etching. Next, crown **15** is stamped or etched from sheet **105** to form a planar crown **115** as shown in **FIG. 12B**. Planar crown has

a first end **120** and a second end **125** on opposing ends of crown rings **25** to connect together strands **20**. Planar crown **115** is rolled to connect first end **120** to second end **125** to form crown **15**, as shown in **FIG. 12C**. Crown **15** formed by planar crown **115** has substantially straight strands **20**. Then hooks **45** are formed as shown in **FIG. 12D**. In this configuration, crown **15** is utilized as otherwise described herein.

[**0043**] Now looking at **FIGS. 13A and 13B**, an alternative embodiment is shown in which crown rings **25** of crown **15** are a unitary structure **130**. Crown **15** having unitary structure **130** is formed either by one of the techniques described above, by molding a single element or by using other known processes. Then hooks **45** are formed as shown in **FIG. 13B**. Crown **15** is attached to at least one vessel structure using the techniques described herein.

[**0044**] Referring to **FIGS. 14A and 14B**, an alternative embodiment of crown **15** having hooks **45** at both first end **30** and at second end **40** is shown. As shown in **FIG. 14**B, vessel **55** is attached to hooks **45** at first end **30** and then vessel **65** is attached to hooks **45** at second end **40** to complete the surgical anastomosis of the vessels. Additionally, other embodiments and methods described herein may be incorporated into this embodiment.

[**0045**] Now referring to **FIGS. 15A and 15B**, an alternative embodiment to restrain hooks **45** containing pointed barbs **35** is shown. Strands **20** each contain an articulating portion **132** which allows the positioning of hook **45** around and the positioning of barb **35** behind strand **20** toward first end **30** of crown **15**. To deploy hook **45**, second end **40** of crown **15** is positioned within a vessel. Next, hook **45** springs outward, penetrating vessel **65**, and then it is snapped back around strand **20**, as shown in **FIG. 15**B, thus capturing vessels **55** and **65**.

[**0046**] Pointed barbs **35** include a range of structures including, but not limited to, several embodiments shown in FIGS. **16-19**. In **FIG. 16**, pointed barb **20** is conically shaped at the end of a cylindrical shaped strand **20**. In **FIG. 17**, pointed barb **20** is formed from a cut at an acute angle from a cylindrical shaped strand **20**. In **FIG. 18**, pointed barb **20** is formed from a pair of cuts at acute angles at the end of a rectangular shaped strand **20**. In **FIG. 19**, pointed barb **20** is formed in a pyramidal shape at the end of a rectangular shaped strand **20**.

[**0047**] The preferred embodiment of the invention also includes sealants to facilitate closure of gap **75**, or any other opening. Sealants are contained on crown **15** adjacent hooks **45**. Sealants include, but are not limited to, various glues and clotting agents. After placement of crown **15** and effecting the surgical anastomosis, these sealants further aid in closure of any gaps and openings.

[**0048**] An alternative embodiment of the invention, as shown in **FIG. 20**, includes an apparatus and method to place vessel **55** inside crown **15** and to secure crown **15** with an internal lock ring **135** placed in vessel **55** at a position between two crown rings **25**. Lock ring **135** exerts an outward force to hold vessel **55** to crown **15**.

[**0049**] FIGS. **21A-21F** show another embodiment of an apparatus and method to use metal suture wires to form an anastomotic connection between vessel **55** and vessel **65**. A flexible mandrel **140** with a flanged end **145** is inserted into vessel **55** such that the end of vessel **55** is flared against flanged end **145** of mandrel **140**.

[**0050**] A main body section **150** is placed over vessel **55**. Section **150** consists of a tubular section **155** with a flanged end **160** that mates with that of flexible mandrel **140**. Starting within flanged end **160** of the main body, and extending along the axial length a short distance, are wire tubes **165** that contain short pieces of metallic wire **170**. Above tubes **165** is a sleeve **175** that slides along the outside of main body **150**. Within the walls of sleeve **175** are receiving holes **180** for wire tubes **165**, and plungers **185** extending from the receiving holes **180**. Receiving holes **180**, in combination with wire tubes **165**, form a telescoping tube pair **190** that supports wire **170** as the end of the sleeve side is advanced forward. Sliding sleeve **175** toward flanged end **160** of main body **150** causes the plungers **185** to push wires **170** downward and into the tissue of vessel **55**. Wire **170** would normally buckle under the load, but tubes **190** provide lateral support. When the tips of the wire **170** reach flanged end **145** of flexible mandrel **140**, a die surface **195** (shown in **FIG. 23B**) deflects wire **170** outward and backward, i.e. proximally. At this point the tips of wire **170** have pierced the wall of vessel **55** and the wall of vessel **65** and, with the deflection caused by die surface **195**, will now go back up through and out the wall of vessel **65** as sleeve **175** is advanced further. Wire advance is stopped when the outer wire tube **190** hits the bottom of receiving holes **180** of sleeve body **175**. Main body **150** is then pulled away from the suture site along the vessel axis, allowing wires **170** to remain where they have been placed.

[**0051**] FIGS. **22A-22D** show four possible end configurations for the tip of wire **170** to maintain the approximation of the tissue. If wire **170** is made of a very elastic material such as Nitinol, wire **170** can be preformed into these shapes and resume these shapes once it has been pushed out of wire tubes **165**. Wire **170**, as shown in **FIGS. 22A, 22C**, and **22D**, holds the tissue in place because the tissue would otherwise have to bend wire **170** to provide an exit path. The distal end of wire **170**, as shown in **FIG. 22**B, forms a loop about a section of the proximal strand, or vice versa, thereby creating an even more secure hold on the tissue.

[**0052**] In the case of malleable metallic suture wire **170**, the section of suture wires **170** that have passed through die surface **195** can be formed into various shapes depending on the geometry of die surface **195**. The smaller the radius of die surface **195**, the tighter the curvature of the end configuration of suture wire **170**. See FIGS. **23A-23F**.

[**0053**] Because both main body **150** and sleeve **175** are circumscribing vessel **55** after it has been sutured, a method to remove main body **150** and sleeve **170** after the sutures have been placed is provided. Embodiments of main body **150** and sleeve **175** that have been split lengthwise and hinged at one edge are shown in **FIG. 24A**. After wire sutures **170** have been placed, sleeve **175** is opened up and pulled away, followed by main body **150** in the same fashion.

[**0054**] Flexible mandrel **140** must also be removed once the connection has been made. **FIGS. 25A and 25B** show flexible mandrel **140** that has an inflatable flanged end **200** with die surfaces **195** that expand with the inflation. The fluid pressure to expand mandrel **140** comes from a catheter **210** that is also used to deliver fluid from a point somewhere

in the body or outside the body. Because die surfaces **195** need to be rigid, die surfaces **195** are placed on a separate surface **220** from flange **200** that can expand but also remain rigid to deflect wire **170**.

[**0055**] The present devices provide a means of placing and securing wire sutures around the circumference of vessels during an anastomosis.

What is claimed is:

**1**. An apparatus for placing multiple sutures during anastomosis of physiological vessels, said apparatus comprising:

a crown comprising:

a plurality of strands, each strand of said plurality of strands having a first end and a second end, each said strand having a first portion and a second portion adjacent said first end and said second end, respectively;

at least one circular band joining together said plurality of strands adjacent said first portion of each said wire strand;

each said strand forming a point in said second end; and

each said strand forming a hook adjacent said second portion for attachment to at least one physiological vessel during anastomosis of physiological vessels.

**2**. The apparatus of claim 1 further comprising means for retaining each said hook of said plurality of strands in a first position for insertion of said second portion of said crown into at least one physiological vessel.

**3**. The apparatus of claim 2 further comprising means for deploying each said hook second portion from said first position to a second position for securing each said hook to at least one physiological vessel during anastomosis of vessels.

**4**. The apparatus of claim 3 wherein said retaining means is a retaining ring.

**5**. The apparatus of claim 4 wherein said deploying means is removal of said retaining ring.

**6**. The apparatus of claim 5 wherein said removal of said retaining ring is accomplished by cutting said retaining ring.

**7**. The apparatus of claim 2 wherein said retaining means is an articulating portion on said strand, wherein said articulating portion allows said hook to be retained by positioning said hook around said first end of said strand and deployed by disengaging said hook from said strand.

**8**. A method for placing multiple sutures during anastomosis of physiological vessels, said method comprising:

providing a crown comprising:

a plurality of strands, each strand of said plurality of strands having a first end and a second end, each said strand having a first portion adjacent said first end and said second end, respectively;

at least one circular band joining together said plurality of strands adjacent said first portion of each said strand; and

each said strand forming a hook adjacent said second end with a point at said second end;

attaching a first physiological vessel to said crown; and

attaching a second physiological vessel to said crown such that said first physiological vessel and said second physiological vessel are substantially joined to one another.

**9**. An apparatus for placing multiple sutures during anastomosis of physiological vessels, said apparatus comprising:

a body containing multiple suture wires;

a mandrel having a die surface corresponding to said multiple suture wires, wherein said body and mandrel are positioned relative to a first physiological vessel and a second physiological vessel such that at least a portion of said first physiological vessel and at least a portion of said second physiological vessel are positioned between said body and said mandrel, said suture wires are forced from said body through said at least a portion of said first physiological vessel, off said die surface and through said at least a portion of said second physiological vessel to form multiple sutures.

**10**. The apparatus of claim 9 further comprising means for removing said body from said first vessel and said second vessel.

**11**. The apparatus of claim 10 wherein said body removing means is a hinged opening.

**12**. The apparatus of claim 9 further comprising means for removing said mandrel from said first vessel and said second vessel.

**13**. The apparatus of claim 12 wherein said mandrel is inflatable and said mandrel removing means is a catheter connected to said mandrel.

**14**. A method for placing multiple sutures during anastomosis of physiological vessels, said method comprising:

providing an apparatus having a body containing multiple suture wires and a mandrel having a die surface;

positioning said apparatus relative to a first physiological vessel and a second physiological vessel, such that at least a portion of said first physiological vessel and at least a portion of said second physiological vessel are contained between said body and said mandrel; and

placing multiple sutures by forcing said multiple suture wires from said body through said at least a portion of said first physiological vessel, off said die surface of said mandrel, and through said at least a portion of said second physiological vessel to form multiple sutures.

**15**. The method of claim 14 further comprising the method step of removing said body from said first physiological vessel and said second physiological vessel.

**16**. The method of claim 14 further comprising the method step of removing said mandrel from said first physiological vessel and said second physiological vessel.

**17**. A method for placing multiple sutures during anastomosis of physiological vessels, said method comprising:

providing a crown comprising:

a plurality of strands, each strand of said plurality of strands having a first end and a second end, each said strand having a first portion adjacent said first end and said second end, respectively;

at least one circular band joining together said plurality of strands adjacent said first portion of each said strand; and

each said strand forming a hook adjacent said second end with a point at said second end;

attaching a first physiological vessel to said crown by placing said first vessel within said crown and everting one end of said first vessel over said hooks; and

attaching a second physiological vessel to said crown such that said first physiological vessel and said second physiological vessel are substantially joined to one another.

* * * * *