Jan. 19, 1932. F. H. P. BEATSON 1,841,778

CARBURETOR

Filed Aug. 20, 1928

Fig. 1.

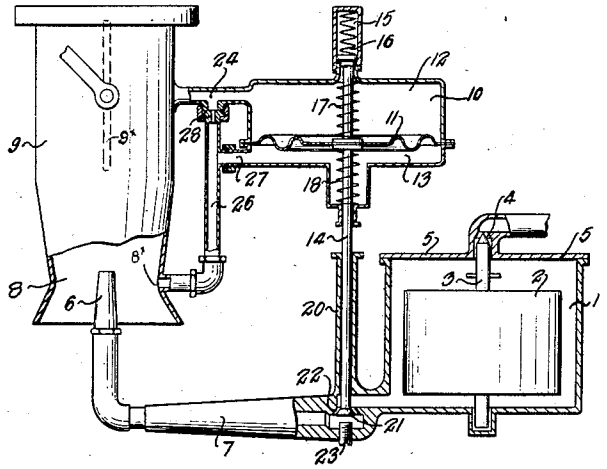


Fig. 2.

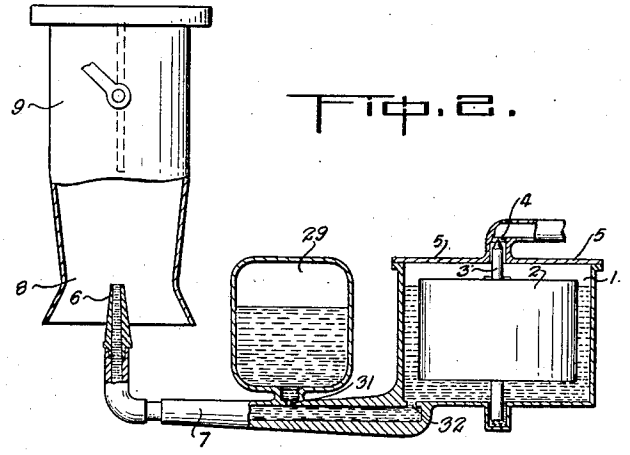


INVENTOR
F. H. P. BEATSON
BY Fulkerson Laughlin & Co
ATTORNEYS.

Patented Jan. 19, 1932 1,841,778

# UNITED STATES PATENT OFFICE

FRANCIS HENRY PATON BEATSON, OF PAISLEY, SCOTLAND

## CARBURETOR

Application filed August 20, 1928. Serial No. 300,829.

My invention relates to improvements in mixture supply systems of internal combustion engines and has for its object the provision of means whereby greater economy of fuel consumption and increased engine efficiency can be obtained as compared with that possible with known mixture supply systems.

In the running of internal combustion engines it is found that the greatest economy of fuel consumption and the highest efficiency of manipulation of an engine is obtained when temporary enrichment of the normal mixture is effected when the throttle is opened or being opened from or to any position, sustained enrichment of the normal mixture is effected during a period of acceleration of the engine, temporary weakening of the normal mixture is effected when the throttle is closed or being closed from or to any position, sustained weakening of the normal mixture is effected during a period of deceleration and complete cessation of fuel flow ensues during a period of extreme deceleration.

As used here the term normal mixture means a mixture strength less than that necessary for maximum power and refers to the ratio of fuel to air and not to any particular volume of flow.

This invention consists in an improved mixture supply system of an internal combustion engine and comprises means responsive to any change of depression produced by the engine suction and adapted automatically to vary temporarily a normal strength in order that the system after disturbance shall deliver a normal mixture when the depression is unchanging that is to say when the engine output and load are in equilibrium.

In order that the invention may be better understood I will now proceed to describe the same in relation to the accompanying drawings reference being had to the letters and figures marked thereon; like letters refer to like parts in the various figures in which:—

Fig. 1 is a diagrammatic view showing the invention applied directly to a valve in the fuel conduit from the float chamber to the jet orifice of a carburetor whereby the mixture strength may be varied.

Fig. 2 is a diagrammatic view showing a modified form of the invention without any mechanical moving parts applied to a carburetor.

In Fig. 1, 9 represents the body of a carburetor, 1 the float chamber, 6 the jet, $9^x$ the throttle valve, 8 the throat of the suction chamber, 21 a fuel valve and 22 the seat therefor.

The throat 8 of the carburetor 9 is provided with an aperture $8^x$ connected by a conduit 26 having two branches 24 and 27 with the diaphragm chambers 12 and 13 respectively.

The valve 21 is mounted on a stem 14 attached to and adapted to be operated by a flexible diaphragm 11 forming a partition between the chambers 12 and 13. The stem 14 above the diaphragm 11 is provided with a spring 17 and the stem 14 below the diaphragm 11 is provided with a spring 18, the springs 17 and 18 oppose each other and reacting against fixed parts of the chambers 12 and 13 maintain the diaphragm 11 in a normal position and state of equilibrium. With the diaphragm 11 in the normal position the fuel valve is adjusted for a flow of fuel to give the normal mixture.

The upper end of stem 14 is adapted to abut against a spring stop 16 upon a definite upward movement in order that the force, resisting movement of the stem 14 shall be increased when the displacement upward of the stem 14 exceeds this definite upward movement.

The conduit 26 is provided with a constriction 28 located between the branches 24 and 27 for purposes of creating a temporary difference of pressure between the chambers 12 and 13 upon a change of depression in the suction chamber.

In use, the apparatus illustrated in Fig. 1, functions in the following manner:—If, at any given speed the engine is running on a steady load and the throttle is only partly open, then a depression of a certain value will occur at the throat 8 and said depression will be communicated through the conduit 26, 24 and 27 to the chambers 12 and 13 regardless of the value of this depression

and so long as the load is maintained steady and the adjustment of the throttle valve 9x is not varied the diaphragm 11 will remain in the normal position and state of equilibrium thus maintaining the fuel valve 21 open the amount that will give the normal mixture.

If, however, the throttle valve 9x is slightly closed the depression at the throat 8 will be reduced with the result that the negative pressure in the chamber 12 will temporarily be greater than the negative pressure in the chamber 13 owing to the constriction 28 prolonging completion in the chamber 12 of the depression and the diaphragm 11 will move upwards thus moving the fuel valve 21 into closer proximity with the seating 22 and so temporarily reducing the flow of fuel to the jet 6 and thereby temporarily reducing the normal mixture strength until, due to the leakage past the constriction 28, the pressure in the chamber 12 is again equal to the pressure in the chamber 13 when the diaphragm 11 will again be in its normal position and state of equilibrium and the normal mixture again effective regardless of the new value of depression in the suction chamber.

If, on the contrary, the throttle valve 9x is slightly opened then the fuel valve 21 is depressed and the flow temporarily increased thereby temporarily increasing the normal mixture strength.

Thus, it will be seen, that for any given engine speed and position of the throttle valve 9x and regardless of the value of depression provided that the load is steady the normal supply of fuel to the jet is not affected but if the throttle valve 9x is opened and the engine accelerates then the depression at the throat will be increased and the diaphragm 11 will temporarily be moved downwards thus moving the valve 21 away from its seating 22 and permitting a temporarily increased supply of fuel to be fed to the jet 6 and similarly, if the throttle valve 9x is partially closed and the engine decelerates then the diaphragm 11 will raise the valve 21 into closer proximity with the seating 22 thus temporarily reducing the supply of fuel to the jet 6.

In the event of a substantial closure of the throttle valve 9x being suddenly effected the diaphragm 11 moves upward with considerable rapidity the end of the stem 14 coming into contact with the spring stop 16. If the change of depression at the throat 8 is only a certain amount (which is dependent upon the deceleration introduced) the upward force exerted by the diaphragm 11 will be insufficient to displace the spring stop 16 with the result that temporarily the quantity of fuel fed to the jet 6 is the minimum necessary to provide a stable firing mixture but if the change of depression at the throat 8 is more than a certain amount (incidental to a large deceleration) then the upward force on the diaphragm 11 will be sufficient to overcome the resistance of the spring stop 16 and the stem 14 will move upwards a further amount thus again temporarily further reducing the supply of fuel past the valve 21 and in the limit actually interrupting the flow.

The size of the orifice 28 is of considerable importance and has to be calibrated so that the temporary difference between the negative pressures in the chambers 12 and 13 shall be sufficiently large to effect the required purpose and shall not be so small in area as to introduce an undesirable degree of lag in equalization of the pressure in the chambers 12 and 13.

The arrangement hereinbefore recited describes a method for temporarily varying a normal mixture strength by directly controlling the flow of fuel to the jet 6 by means of a fuel valve 21. Obviously, any other means may be provided whereby the quantity of fuel delivered to the suction chamber or the mixture strength may be controlled in accordance with this invention.

In the alternative form of application illustrated in Fig. 2, I substitute a chamber 29 which opens into the passage 7 in lieu of the parts used in the construction as illustrated in Fig. 1, and hereinbefore described. 31 is a restricted throat formed to control the rate of fuel flow to as well as from the chamber 29 into the conduit. The entrance from the float chamber 1 to the conduit 7 also has a restriction 32 for a particular purpose as shall be hereinafter explained. In preparing this alternative type of carburetor for functioning, part of the air is exhausted from the chamber 29, and its place is taken by liquid fuel which of course communicates through the throat 31 with the liquid fuel contained in the conduit 7.

In Fig. 2 wherein moving parts are obviated, the air is partially exhausted from the chamber 29 which will permit the entrance of liquid fuel thereinto to take its place, as illustrated in Fig. 2. This contained liquid fuel will be held in suspension in such chamber 29 due to the exhaustion of the air and when the fuel is flowing to the jet 6 from the float chamber 1 to give a normal mixture the carburetor will be, what I would call, in equilibrium, such normal mixture being defined by the orifice 32 connecting the float chamber 1 to the conduit 7. If the throttle is partially closed the depression in the air suction chamber 9 becomes less and consequently this reduction of air pressure upon the liquid fuel in the jet will permit the entrance of a further quantity of liquid fuel into the exhausted chamber 29 thus momentarily weakening the normal mixture. If on the other hand, the throttle valve is slightly opened the pressure within the air suction

member 9 will be decreased which will cause the expulsion of liquid fuel from the chamber 29 to the conduit 7 thus momentarily enriching the normal mixture.

The principle of this alternative construction is; when the engine is running at a steady speed and load the air pressure within the top of the chamber 29 is substantially equal to that of the pressure within the air suction chamber, so that decreased pressure in the air suction member causes the expulsion of liquid fuel from chamber 29, and an increased pressure in the air suction chamber causes the entrance of liquid fuel into the air chamber 29.

It can thus be seen that in both these applications a predetermined normal mixture is unaffected by any value of steady depression in the suction chamber and is only temporarily affected upon any change of depression in the suction chamber.

What I claim as my invention is:—

1. In combination with a carburetor having a suction member and a fuel reservoir communicating therewith, a fuel control valve, and means temporarily actuated by a change of pressure in the suction member for actuating the valve.

2. In combination with a carburetor having a suction member and a fuel reservoir communicating therewith, means for controlling the flow of fuel to the suction member, an oscillatable pressure actuated member having a fixed axis of oscillation, conduits forming a communication from each side of the oscillatable member to the suction member whereby such oscillatable member is actuated by the varying pressure in the suction member, and a movable connection between the oscillatable member and the fuel flow control means.

3. In combination with a carburetor having a suction member and a fuel reservoir communicating therewith, means for controlling the flow of fuel to the suction member, an airtight housing, an oscillatable diaphragm having a fixed axis of oscillation, said diaphragm extending interiorly across said housing so that a pair of chambers are constituted therein, conduits extending from the chambers to the suction member whereby the diaphragm is actuated by the varying pressure in the suction member, and a connection extending from the diaphragm to the fuel flow control means.

4. In combination with a carburetor having a suction member and a fuel reservoir communicating therewith, means for controlling the flow of fuel to the suction member, an airtight housing, an oscillatable diaphragm having a fixed axis of oscillation, said diaphragm extending interiorly across the housing so that a pair of chambers are constituted therein, conduits extending from the chambers to the suction member, a passage communicating between the conduits, means for restricting the fluid flow through the passage whereby the fluctuations in pressure in the suction member are retarded in their communication with one of said chambers, and means connecting the diaphragm to the fuel flow control means.

5. In combination with a carburetor having a suction member and a fuel reservoir communicating therewith, means for controlling the flow of fuel to the suction member, an airtight housing, a diaphragm extending interiorly across the housing so that a pair of chambers are constituted therein, and resilient means for retaining the diaphragm in normal position and state of equilibrium, conduits extending from the chambers to the suction member, a passage between the conduits, a restriction in said passage whereby fluctuations in pressure in the suction member are retarded in their communication with one of said chambers, and movable means extending from the diaphragm to the fuel flow control means.

6. In combination with a carburetor having a suction member and a fuel reservoir communicating therewith, means for controlling the flow of fuel to the suction member, an airtight housing, a diaphragm extending interiorly across the housing so that a pair of chambers are constituted therein, resilient means for normally retaining the diaphragm in equilibrium, resilient means to additionally oppose movement of the diaphragm in one direction, conduits extending from the chambers to the suction member, a restriction whereby fluctuations in pressure in the suction member are retarded in their communication with one of said chambers, and connecting means between the diaphragm and fuel flow control means.

7. The combination with a carburetor having a suction member adapted for connection to the intake of an internal combustion engine and a fuel reservoir in communication through a passage with the suction member, means associated with said passage and responsive to the suction of the engine for supplying fuel commensurate to the varying speed requirements of the engine, means for augmenting the flow of fuel through said passage throughout any accelerating period, and means for reducing the flow of fuel through said passage throughout any decelerating period, both of said means becoming inoperative immediately following acceleration or deceleration.

8. The combination with a carburetor having a suction member adapted for connection to the intake of an internal combustion engine, a throttle valve within the suction member, and a fuel reservoir, in communication through a passage with the suction passage, means associated with said passage and re-

sponsive to the suction of the engine for supplying fuel commensurate to the varying speed requirements of the engine, means as the throttle is opened from one position to another for providing a constant increase to the flow of fuel through said passage above the normal flow due to engine suction, means as the throttle is moved from one position to a position of greater closure for providing a constant decrease to the flow of fuel through said passage below the normal flow due to engine suction, and means responsive to an abnormal closure of the throttle for temporarily stopping the flow of fuel through said passage.

9. The combination with a carburetor having a suction member adapted for connection to the intake of an internal combustion engine, such suction member being subject to varying pressures according to engine usage, a fuel reservoir in communication with the suction member through a passage, means associated with said passage for delivering a normal flow of fuel to the suction member commensurate with the varying requirements of the engine, means for providing throughout an entire period of decreasing pressure in the suction member, an increase to the flow of fuel through the passage above the normal flow due to engine suction, and means for providing throughout an entire period of increasing pressure in the suction member, a decrease to the flow of fuel through the passage below the normal flow due to engine suction.

10. The combination with a carburetor having a suction member and a fuel reservoir in communication therewith adapted for connection to an internal combustion engine, said suction member being adapted to receive air for incorporation with fuel from the reservoir to form a normal gaseous mixture, a normally positioned reciprocatory element having opposing sides which are jointly exposed to the pressure within the suction member, means associated with said reciprocatory element for controlling the fuel ratio to air in the suction member, and choke means interposed between opposite sides of the reciprocatory element whereby a change in the velocity of mixture flow through the suction member temporarily unbalances the pressure on opposite sides of the reciprocatory element and through said control means temporarily increases or decreases the ratio of fuel to air in the mixture.

11. The combination with a carburetor having a suction member and a fuel reservoir in communication therewith adapted for connection to an internal combustion engine, said suction member being adapted to receive air for incorporation with fuel from the reservoir to form a normal gaseous mixture, a normally positioned reciprocatory element having opposing sides which are jointly exposed to the pressure within the suction member, means associated with said reciprocatory element for controlling the fuel ratio to air in the suction member, and choke means interposed between opposite sides of the reciprocatory element whereby a change in the velocity of mixture flow through the suction member temporarily unbalances the pressure on opposite sides of the reciprocatory element and through said control means temporarily increases or decreases the ratio of fuel to air in the mixture, said reciprocatory element returning to its normal position when the mixture flow through the suction member becomes stable.

12. The combination with a carburetor having a suction member and a fuel reservoir in communication therewith adapted for connection to an internal combustion engine, said suction member being adapted to receive air for incorporation with fuel from the reservoir to form a normal gaseous mixture, a normally positioned reciprocatory element having opposing sides which are jointly exposed to the pressure within the suction member, means associated with said reciprocatory element for controlling the fuel ratio to air in the suction member, and choke means interposed between opposite sides of the reciprocatory element whereby a change in the velocity of mixture flow through the suction member temporarily unbalances the pressure on opposite sides of the reciprocatory element and through said control means temporarily increases or decreases the ratio of fuel to air in the mixture, said fuel ratio variation being sustained throughout the period of change from one velocity flow through the suction member to another.

Signed at the city of London, England, this 30th day of June, 1928.

FRANCIS HENRY PATON BEATSON.