H. P. ELLIOTT.

ADDRESS PLATE.

APPLICATION FILED APR. 10, 1912.

1,068,578. Patented July 29, 1913.

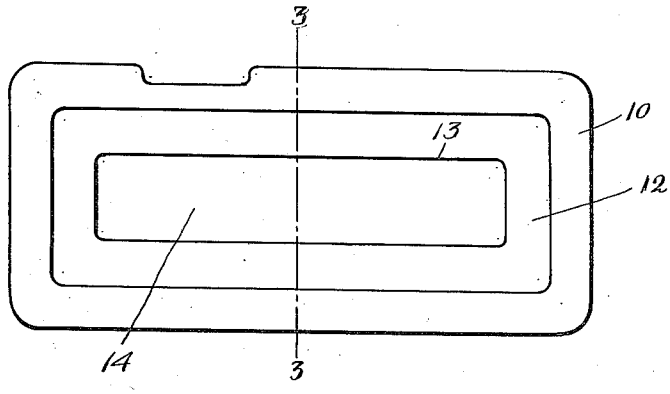

Fig. 1.

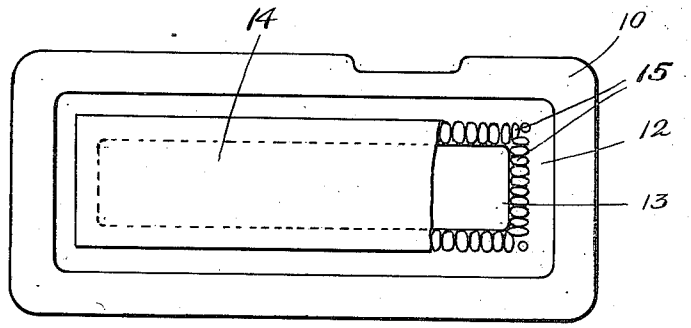

Fig. 2.

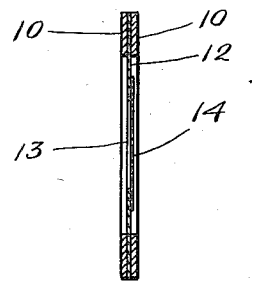

Fig. 3.

Witnesses.

H. B. Davis.

Cynthia Doyle

Inventor.

Harmon P. Elliott.

By Hayes & Hamman

Attys.

UNITED STATES PATENT OFFICE.

HARMON P. ELLIOTT, OF NEWTON, MASSACHUSETTS.

ADDRESS-PLATE.

1,068,578. Specification of Letters Patent. Patented July 29, 1913.

Application filed April 10, 1912. Serial No. 689,730.

To all whom it may concern:

Be it known that I, HARMON P. ELLIOTT, a citizen of the United States, residing at Newton, in the county of Middlesex and State of Massachusetts, have invented an Improvement in Address-Plates, of which the following is a specification.

This invention relates to address-plates or stencils, and has for its essential object the construction of an address-plate or stencil whereby mimeograph paper or some similar paper having the general characteristics of mimeograph paper may be employed. Mimeograph paper or its equivalent may be cut or prepared for use on a typewriting machine, and when used the characters will resemble the work of a typewriting machine.

In the preferred embodiment of my invention the mimeograph paper or its equivalent is adhesively secured to one side of a support which is composed of thin paper and has an opening over which the mimeograph paper is extended, and said support has secured to its edges suitable edge-frames composed of thick paper by which it is substantially reinforced and stiffened and the mimeograph paper or its equivalent, which is of delicate texture, is protected.

Figure 1 is a front view of an address-plate embodying this invention. Fig. 2 is a rear view of the same, a portion of the stencil-blank being broken away. Fig. 3 is a transverse vertical section taken on the dotted line 3—3, Fig. 1.

In the embodiment of my invention as here shown for the sake of illustrating the same, 10, 10, represent a pair of edge-frames composed of thick paper. These frames are here shown as made alike, having openings adapted to register with each other. 12 represents a piece of paper which is placed between said frames 10, 10, and which is adhesively secured thereto over all. Said piece 12 is usually composed of paper much thinner than the paper composing the edge-frames. Said piece 12 has a central opening 13 of quite large dimensions. The stencil-blank 14 composed of mimeograph paper or its equivalent, is made smaller than the piece 12, and preferably smaller than the openings in the edge-frames, but larger than the opening in the piece 12, and is adhesively secured to one side of said piece 12, and extended over the opening therein. It is usually secured by a plurality of contiguously arranged patches of glue, paste or other adhesive substance, represented at 15. The piece 12 thus serves as a holder or support for the stencil-blank. The paper composing the stencil-blank is very thin, being much thinner than the paper composing the edge-frames, thus admitting of several address-plates or stencils being superimposed and moved one upon another without tearing or abrading or injuring the blank, and without liability of the edges of the blank becoming caught and torn. The address-plate or stencil when thus completed is ready to be cut or prepared for use, although if desired the piece of mimeograph paper or its equivalent may be cut or prepared for use before being attached to its support.

The stencil will be used like an ordinary stencil, with a printing-roller or other suitable form of printing-device.

I claim:—

1. An address-plate comprising a supporting piece having an opening, a stencil-blank composed of paper, such as mimeograph paper secured to one side of said supporting piece, which is made smaller than the supporting piece but larger than the opening, and an edge-frame secured to said supporting-piece outside of the stencil-blank, substantially as described.

2. An address-plate consisting of a supporting piece having an opening, a stencil-blank composed of paper, such as mimeograph paper secured all around its edges to one side of said supporting piece and extended over said opening, and an edge-frame made thicker than the paper composing the stencil-blank, which is secured to the same side of the supporting-piece that the stencil-blank is secured, substantially as described.

3. An address-plate consisting of a piece of paper having an opening, a stencil-blank composed of paper, such as mimeograph paper adhesively secured to one side of said

piece and extended over said opening, and a pair of edge-frames of paper which is thicker than the paper composing the stencil-blank, said edge-frames being arranged respectively at opposite sides of said piece and adhesively secured thereto over all, substantially as described.

In testimony whereof, I have signed my name to this specification, in the presence of two subscribing witnesses.

HARMON P. ELLIOTT.

Witnesses:
B. J. NOYES,
H. B. DAVIS.