676892

AUSTRALIA

PATENTS ACT 1990

NOTICE OF ENTITLEMENT

We, **IC Sensors, Inc.**, the applicant/Nominated Person in respect of Application No. 62399/94 state the following:-

The Nominated Person is entitled to the grant of the patent because the Nominated Person derives title to the invention from the inventor by assignment.

The Nominated Person is entitled to claim priority from the application listed in the declaration under Article 8 of the PCT because the Nominated Person is the assignee of the applicant in respect of the application listed in the declaration under Article 8 of the PCT, and because that application was the first application made in a Convention country in respect of the invention.

DATED this TWENTY EIGHTH day of NOVEMBER 1994

a member of the firm of
DAVIES COLLISON
CAVE for and on behalf
of the applicant(s)

(DCC ref: 1694520)

AU9462399

(12) PATENT ABRIDGMENT (11) Document No. AU-B-62399/94
(19) AUSTRALIAN PATENT OFFICE (10) Acceptance No. 676892

(54) Title
MICROMACHINING PROCESS FOR MAKING PERFECT EXTERIOR CORNER IN AN ETCHABLE SUBSTRATE

International Patent Classification(s)
(51)[5] **H01L 021/306** **B44C 001/22**
(51)[6] **H01L 021/308**

(21) Application No. : **62399/94** (22) Application Date : **22.02.94**

(87) PCT Publication Number : **WO94/19824**

(30) Priority Data

(31) Number	(32) Date	(33) Country
023188	**25.02.93**	**US UNITED STATES OF AMERICA**

(43) Publication Date : **14.09.94**

(44) Publication Date of Accepted Application . **27.03.97**

(71) Applicant(s)
IC SENSORS, INC.

(72) Inventor(s)
JOHN H JERMAN

(74) Attorney or Agent
DAVIES COLLISON CAVE , 1 Little Collins Street, MELBOURNE VIC 3000

(57) Claim

1. A process for forming a three-dimensional structure having at least one exterior corner in an etchable substrate comprising:

partitioning said structure into a first feature and a second feature, such that the at least one exterior corner is formed by an intersection of the two features;

etching said first feature;

forming an etch mask on the surface and on the substrate of the etched first feature;

opening a window in the etch mask on the substrate to define said second feature; and

etching said second feature, thereby obtaining said at least one exterior corner.

OPI DATE 14/09/94 APPLN. ID 62399/94
AOJP DATE 17/11/94 PCT NUMBER PCT/US94/01591

AU9462399

(51) International Patent Classification 5 :
H01L 21/306, B44C 1/22, C03C 15/00, 25/06

A1

(11) International Publication Number: WO 94/19824

(43) International Publication Date: 1 September 1994 (01.09.94)

(21) International Application Number: PCT/US94/01591

(22) International Filing Date: 22 February 1994 (22.02.94)

(30) Priority Data:
023,188 25 February 1993 (25.02.93) US

(71) Applicant: IC SENSORS, INC. [US/US]; 1701 McCarthy Boulevard, Milpitas, CA 95035-7416 (US).

(72) Inventor: JERMAN, John, H.; 3056 Ramona Street, Palo Alto, CA 94306 (US).

(74) Agents: KLIVANS, Norman, R. et al.; Skjerven, Morrill, MacPherson, Franklin & Friel, 25 Metro Drive, Suite 700, San Jose, CA 95110 (US).

(81) Designated States: AU, CA, JP, European patent (AT, BE, CH, DE, DK, ES, FR, GB, GR, IE, IT, LU, MC, NL, PT, SE).

Published
With international search report.

676892

(54) Title: MICROMACHINING PROCESS FOR MAKING PERFECT EXTERIOR CORNER IN AN ETCHABLE SUBSTRATE

(57) Abstract

A process for forming a three-dimensional structure etched in a substrate (501) with perfect convex corners includes partitioning the structure into two features (502-504, 505) such that the exterior corners are formed by the intersection (506) of the two features; etching the first feature (502-504); forming an etch mask on the surface and on the substrate of the etched first feature· opening a window in the etch mask on the substrate to define the second feature; and etching the second feature (505), thereby obtaining the desired structure.

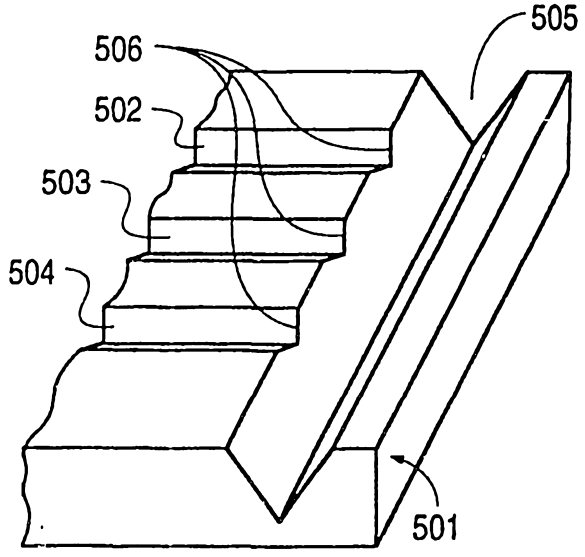

MICROMACHINING PROCESS FOR MAKING PERFECT EXTERIOR CORNER IN AN ETCHABLE SUBSTRATE

BACKGROUND OF THE INVENTION

Field of the Invention

This invention relates to the field of forming three-dimensional structures in an etchable crystalline substrate material, in particular to the formation of perfect exterior corners intersected by features formed in the material using micromachining.

Description of Prior Art

The ability to fabricate precise, three-dimension structures in an etchable substrate material, particularly in silicon, relies to a large degree on the ability to perform so-called anisotropic etching of the single crystal silicon substrate. Anisotropic etches have the property of etching certain crystallographic planes of silicon much more rapidly than others by using some etchants such as mixtures of KOH and water or mixtures of ethylene diamine, pyrocatechol, and water. All of these etches etch the {111} silicon plane much more slowly than the other low order {100} or {110} planes.

The two most common surface orientations of silicon wafers are (100) and (111). Since the etch rate of {111} planes is so low, (100) silicon is the preferred orientation for device fabrication. In (100) silicon, a flat is provided on each wafer along a <110> direction. In this orientation, the {111} planes intersect the (100) surface parallel and perpendicular to the wafer flat, at an angle of 54.74° with respect to the surface as shown in Figure 1A in cross section.

If an opening in an etch mask is opened to form a rectangle, an anisotropic etchant will etch down exposing the {111} planes, to form a V-grove as shown in Figure 1A

and 1B in a plan view.

If a window in an etch mask is formed which is more complicated in shape than an rectangle, any convex protrusion will etch back to the "farthest" {111} plane, given enough time, as shown in Figures 2A and 2B.

If one wants a convex corner, for example, at point A shown in Figure 2B, use this exact L-shape as the etch mask, and put the substrate in KOH and water, the corner is etched back as shown in Fig. 3A and the protruding mask feature breaks off. So if it is desirable to have a convex corner which is not etched back, a so-called corner compensation technique may be used, in which an additional mask feature is added to the corner, which etches back just the right amount to leave the desired three-dimension feature at the exterior corner. One such corner compensation pattern is to add a square protrusion at the exterior corner as shown in Figure 3B. As the etch proceeds downward, this additional feature etches back at the correct rate to leave the desired corner feature. This type of corner compensation has been long known.

However, with such corner compensation, the perfect intersection can only happen at a particular depth, which is the depth for which the correct corner compensation has been provided. In other words, the depth has to exactly match this additional mask feature, and the moment of perfect intersection (depth) is very short and hard to control. Furthermore, one may sometimes want a groove A to be very shallow and intersect a much deeper groove B as shown in Figure 3C. For example, groove A is 10 microns wide and about 7 microns deep, and groove B can be 100 microns deep and 140 microns wide. In such a case, with the corner compensation scheme one would have to add a very large corner compensator feature to the corner, but normally there is no room for this. The corner compensation therefore cannot be used in some

circumstances.

Another related problematic situation is when it is desired to form a through hole in a wafer by etching simultaneously from the back and front sides of the wafer, simultaneously as shown in Figure 4A. Just after the two grooves 1 and 2 meet, the features begin etching back from the point of intersection of the {111} planes at a rapid rate. If left long enough, the sidewalls etch back to meet the other set of {111} planes forming a large cavity in the silicon, as shown in Figure 4B; this is undesirable if a hole having a well defined diameter is needed.

Summary of the Invention

Accordingly, the present invention advantageously provides a process which forms at least one exterior corner in an etchable substrate which does not etch back.

The present invention also advantageously provides a process which forms at least one exterior corner in an etchable substrate in circumstances where the standard corner compensation is not usable.

In accordance with one aspect the present invention provides a process for forming a three-dimensional structure having at least one exterior corner in an etchable substrate comprising;

partitioning said structure into a first feature and a second feature, such that that at least one exterior corner is formed by an intersection of the two features;

etching said first feature;

forming an etch mask on the surface and on the substrate of the etched first feature;

opening a window in the etch mask on the substrate to define said second feature; and

etching said second feature, thereby obtaining said at least one exterior corner.

Accordingly, there is also provided a three dimensional structure having at least one exterior corner formed by the process of the immediately preceding paragraph.

The process advantageously forms a three-dimensional structure etched in a substrate having perfect convex corners.

In a preferred embodiment the window for the second feature surrounds at the

AUSTRALIAN PATENT OFFICE

substrate principal surface one end of the masked and passivated first feature, and the etchable substrate, such as silicon, beneath the surrounded end portion of the first feature is undercut by etching until the {111} planes defining the sidewalls of the first feature are met. The exterior corner(s) formed by the intersection of the first etched feature and the now etched groove of the second feature do not etch back, since the corner is passivated by the etch mask on the principal surface defining the second feature.

In another aspect the invention provides a process for forming a three-dimensional structure having at least one exterior corner in an etchable substrate comprising;

partitioning said structure into a first feature and a second feature such that said at least one exterior corner is formed by the intersection of the two features;

defining said second feature in a mask layer on a surface of said wafer;

oxidizing the remainder of said wafer;

patterning said first feature on said oxide;

etching said first feature;

oxidizing said wafer to grow oxide on the surface of the etched first feature;

removing said mask layer; and

etching said second feature, thereby obtaining said at least one exterior corner.

Again, the invention provides a three-dimensional structure having at least one exterior corner formed by the process of the immediately preceding paragraph.

Advantageously, this aspect avoids the need to perform a second lithography step after the first feature is etched, by first defining the second feature by, for example, a nitride mask. The remainder of the wafer (substrate) is then oxidized and the first feature is patterned. The wafer surface is still planar at this point and the mask photolithography step is therefore easy. After the first feature is etched, the wafer is oxidized. The mask protects the mask region defining the second feature from oxidizing. So, after the entire wafer surface is, for example, plasma etched to remove the mask, the original substrate surface is exposed without having to perform lithography on the uneven surface (which is clearly much harder since the interior oxide surface of the first etched feature must be completely protected during the lithography.) The wafer is again etched until the second feature etches out.

In a further aspect the invention provides a process for forming a through hole in a

AUSTRALIAN PATENT OFFICE

etchable substrate comprising:

determining a front feature and a back feature, such that said through hole is formed by an intersection of the two features;

etching said front feature from a top surface of said substrate;

forming an etch mask on the surface of the etched front feature and on a bottom surface of said substrate;

opening a window in the mask on the bottom surface; and

etching the back feature as defined by the window, whereby said hole is formed by an intersection of the two features.

Accordingly, the invention also provides an etchable substrate having a through hole formed by the process of the immediately preceding paragraph.

According to this aspect a wafer is first etched from the top surface to form the first feature, followed by forming an etch mask on the top surface. Then one opens a region defining the second feature on the masked bottom surface of the wafer and etches the second feature from the bottom surface, thereby obtaining a sharply defined intersection of the two features and a well defined hole after removing the etch masks.

The above and other features and advantages of the present invention will be clear form the following description of the preferred embodiments in conjunction

AUSTRALIAN PATENT OFFICE ML

with the accompanying drawings.

DESCRIPTION OF THE DRAWINGS

Figure 1A is a cross-sectional view of a groove formed in a (100) wafer by anisotropic etching, showing the intersecting angle between a {111} plane and the (100) surface.

Figure 1B is a plan view of Figure 1 showing an etched groove formed from a rectangular window in the etch mask on the surface of the wafer.

Figures 2A and 2B are top plan views showing opened windows on the mask which are more complicated than a rectangle, and resulting grooves.

Figure 3A is a view similar to Figure 2B showing etching-back on the exterior (convex) corner.

Figure 3B is a view similar to Figure 2B showing an added mask protrusion for corner compensation.

Figure 3C is a partial plan view of a wafer showing a shallow groove A intersecting a deeper groove B.

Figure 4A is a cross-sectional view of a wafer showing simultaneous etching from the back and front side of the wafer in prior art.

Figure 4B is a view similar to Figure 4A showing rapid etching-back from the point of intersection of the {111} planes.

Figure 5A is a partial perspective view of an etched wafer showing perfect exterior corners formed according to the present invention.

Figure 5B is a top plan view of a wafer showing the shape of the window for the second groove after the first grooves are etched out.

Figure 6 is a top plan view of a wafer showing the second groove pattern defined in nitride and the first groove patterns defined in the oxide.

Figure 7A is a top plan view of a wafer showing another embodiment of the present invention.

Figure 7B is a cross-sectional view of Figure 7 taken along line B-B just after the backside etch has started.

AUSTRALIAN PATENT OFFICE ML

Figure 7C is a cross-sectional view of Figure 7 taken along line B-B after the etching from the bottom surface is completed.

Figure 8A is a top plan view of an accelerometer structure formed according to the present invention.

Figure 8B is a cross-sectional view of Figure 8A taken along line C-C in Figure 8A.

DETAILED DESCRIPTION OF THE INVENTION

Figure 5A is a partial perspective view of an etched wafer. There are three horizontal V-grooves 502, 503 and 504 and vertical groove 505, and the intention is to obtain sharp intersections 506 between the horizontal grooves 502, 503 and 504 and the vertical groove 505. (Horizontal and vertical are arbitrary designators here). According to the present invention, horizontal grooves 502', 503' and 504' are first etched in a (100) wafer. An end portion of each groove 502', 503', 504' protrudes into the region in which is to be formed the vertical groove 505, as shown in Figure 5B with the sidewalls of each groove 502', 503', 504' formed by <111> planes. Then the wafer is oxidized to mask the etched horizontal grooves. After that, one opens in the mask a window pattern 505a for defining the vertical groove 505, which surrounds said end portions 502'E, 503'E and 504'E of the oxidized grooves 502', 503' and 504', and one etches the vertical groove 505. The silicon portion beneath the end portions 502'E, 503'E and 504'E of the horizontal grooves is undercut by the etch until the <111> planes defining the sidewalls of the horizontal grooves 502', 503' and 504' are met. The exterior corners formed by intersection of the horizontal grooves 502', 503' and 504' and the etching of vertical groove 505 do not etch back since these corners are passivated by the oxide mask in the sidewalls of the horizontal grooves 502', 503' and 504', thereby

obtaining sharp intersections between the horizontal grooves 502, 503, 504 and the vertical groove 505.

In order to define the window pattern 505a for the vertical groove 505 after oxidization of the etched grooves 502', 503' and 504', a second lithography step is usually needed. This is difficult since the interior oxide surface of the horizontal grooves must be completely protected during the lithography.

Nitride mask processes are used to simplify the process. One way to perform the process in accordance with the present invention is to define the vertical groove pattern 605a in silicon nitride first, as shown in Figure 6. The remainder of the wafer 601 is then oxidized to grow oxide 601a, and the horizontal groove patterns 602a, 603a and 604a are defined on the oxide 601a, as shown in Figure 6. Since the wafer is still planar at this point, the photolithography step is relatively easy. Then, one puts the wafer 601 in an etchant for etching the horizontal grooves 502', 503' and 504', and thereafter, the wafer is oxidized again. Since the nitride mask protects the vertical groove region 605a from oxidizing, the original silicon surface is exposed after the entire wafer surface is plasma etched in, for example, SF_6 gas to remove the nitride. The wafer is again etched in, for example, KOH and water until the vertical groove etches to the desired depth.

The structure shown in Figure 5A can be used for instance in making flow restrictors. There, many quite small grooves which are used to trap little particles are connected to much larger and deeper flow channels. As mentioned previously, there is not enough room therefore for the standard corner compensation techniques.

Reference is now made to Figures 7a and 7b, which show another embodiment of the present invention. Figure 7a is a top plan view of a silicon mesh in which holes of

specified size are formed in a silicon wafer. This structure may be used for an atomizer for liquid droplets or for an alternate fluid particle filter. According to the present invention, a (100) wafer is patterned photographically on its top surface with an array of squares 702a a shown in Figure 7A. The wafer is then etched from the top surface 703 until holes each of inverted pyramid shape 702 are etched out for each square 702a as shown in Figure 7A and 7B, with the sidewalls of the pyramid 702 formed by <111> planes. Thereafter the whole wafer is oxidized so that oxide is grown on the surface of the etched holes. A large square window 704 which has the dimensions of the whole array of the etched holes 702a is then patterned photolithographically on the bottom side of the wafer. The wafer is etched again from the back side as shown in Figure 7B where the heavy lines represent the silicon surface covered by the etch mask, for example, thermally grown silicon oxide. The etch is stopped when it reaches a predetermined depth as shown in Figure 7C, which leaves well defined holes in the silicon after the etch mask is removed.

This process can be used to advantage in the formation of accelerometer structures, where typically a silicon mass is freed from the surrounding silicon substrate, except for narrow or thin support beams, as shown in Figure 8A and 8B. In Figure 8A, which is a top plan view of a wafer, a silicon mass 801 is supported by support beams 802 and 803. Figure 8B is a cross-sectional view of Figure 8A taken along line C-C. Here the top etch can be performed first with appropriate corner compensation. After passivation of the surface of the etched feature, the bottom etch is performed, also with corner compensation. The bottom etch is stopped when the correct thickness of top support beams 802 and 803 is achieved.

The present invention has been described in its preferred embodiments. However, these embodiments are only illustrative, and do not limit the scope of the invention. It will be apparent to those skilled in the art that various variation and modifications can be made without departing from the spirit and the scope of the invention as hereinafter claimed.

For example, it is also possible to have multiple etches either in the embodiment of the present invention in conjunction with Figures 5A and 5B or in the embodiment in conjunction with Figures 7A and 7B, as long as the previous etched surface is passivated by an appropriate etch mask between each etch; the types of etch mask which are appropriate may include thermally grown silicon dioxide, chemically vapor deposited silicon nitride, evaporated or sputtered metal layers such as chrome or chrome-gold layers and diffused etch stops such as heavily doped boron layers; it is also possible to use an isotropic etchant, such as a mixture of nitric and hydrofluoric acid or plasma of sulfur hexafluoride, as one of the etches. Thus an isotopically etched groove, which does not need to be aligned to any particular silicon direction, can be etched first, followed by an anisotropic etch. The scope of the invention is limited only by the claims which follow.

Throughout this specification and the claims which follow, unless the context requires otherwise, the word "comprise", or variations such as "comprises" or "comprising", will be understood to imply the inclusion of a stated integer or group of integers but not the exclusion of any other integer or group of integers.

AUSTRALIAN PATENT OFFICE

THE CLAIMS DEFINING THE INVENTION ARE AS FOLLOWS:

1. A process for forming a three-dimensional structure having at least one exterior corner in an etchable substrate comprising:

partitioning said structure into a first feature and a second feature, such that the at least one exterior corner is formed by an intersection of the two features;

etching said first feature;

forming an etch mask on the surface and on the substrate of the etched first feature;

opening a window in the etch mask on the substrate to define said second feature; and

etching said second feature, thereby obtaining said at least one exterior corner.

2. A process as defined in claim 1, wherein said window for the second feature surrounds at the substrate principal surface one end of the etched first feature.

3. A process as defined in claim 1 or claim 2, wherein said first feature is a set of parallel grooves and said second feature is a groove perpendicular to the set of parallel grooves.

4. A process as defined in claim 3, wherein said first and second grooves are V-shaped in cross section.

5. A process as defined in claim 4, wherein each groove of said set of grooves is narrower and shallower than said second feature.

6. A process as defined in any one of the preceding claims, wherein the step of etching said first feature comprises isotropic etching.

7. A process for forming a three-dimensional structure having at least one exterior

AUSTRALIAN PATENT OFFICE

corner in an etchable substrate comprising:

partitioning said structure into a first feature and a second feature such that said at least one exterior corner is formed by the intersection of the two features;

defining said second feature in a mask layer on a surface of said wafer;

oxidizing the remainder of said wafer;

patterning said first feature on said oxide;

etching said first feature;

oxidizing said wafer to grow oxide on the surface of the etched first feature;

removing said mask layer; and

etching said second feature, thereby obtaining said at least one exterior corner.

8. A process as defined in claim 7, wherein said second feature as defined in the mask layer surrounds at the principal surface at the substrate one end of the etched first feature.

9. A process as defined in claim 7 or claim 8, wherein said first feature is a set of parallel grooves, and said second feature is a groove perpendicular to said set of parallel grooves.

10. A process as defined in claim 9, wherein said first and second grooves are V-shaped.

11. A process as defined in claim 10, wherein each groove of said set of grooves is narrower and shallower than said second feature.

12. A process as defined in any one of claims 7 to 11, wherein the step of etching said first feature comprises isotropic etching.

13. A process as defined in any one of claims 7 to 12, wherein the removing of said mask layer uses plasma etch.

AUSTRALIAN PATENT OFFICE

14. A process for forming a through hole in an etchable substrate comprising:

determining a front feature and a back feature, such that said through hole is formed by an intersection of the two features;

etching said front feature from a top surface of said substrate;

forming an etch mask on the surface of the etched front feature and on a bottom surface of said substrate;

opening a window in the mask on the bottom surface; and

etching the back feature as defined by the window, whereby said hole is formed by an intersection of the two features.

15. A process as defined in claim 14, wherein said front feature is a hole of inverted pyramid shape with the surfaces formed by four {111} crystal planes of the substrate.

16. A process as defined in claim 14, wherein said front feature is a hole of inverted truncated pyramid shape with the sidewalls formed by four {111} crystal planes of the substrate.

17. A process as defined in claim 14, wherein said front feature is an array of holes, and said back feature is a large hole of inverted truncated pyramid shape which intersects said array of holes.

18. A process as defined in any one of claims 14 to 17, wherein at least one of the steps of etching is an anisotropic etch.

19. A process for forming a three-dimensional structure substantially as hereinbefore described with reference to the drawings but excluding Figures 1A to 3B, 4A and 4B.

AUSTRALIAN PATENT OFFICE

20. A process for forming a through hole in an etchable substrate substantially as hereinbefore described with reference to the drawings but excluding Figures 1A to 3B, 4A and 4B.

21. A substrate having a three dimensional structure formed by a process according to any one of claims 1 to 13 or claim 19.

22. A substrate having a through hole formed by a process according to any one of claims 14 to 18 or claim 20.

DATED this 21st day of January, 1997

IC Sensors, Inc.

By DAVIES COLLISON CAVE
Patent Attorneys for the Applicant(s)

AUSTRALIAN PATENT OFFICE

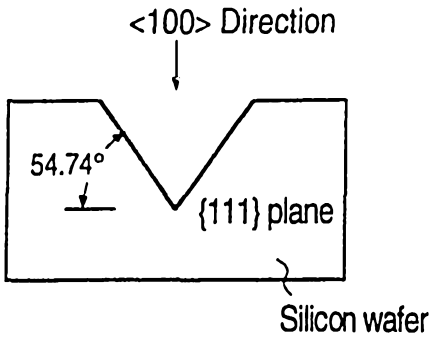

FIG. 1A
(PRIOR ART)

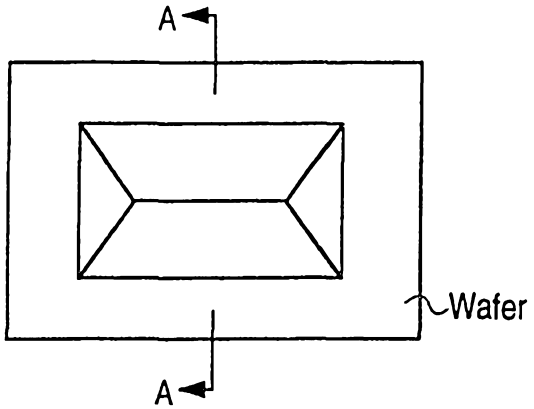

FIG. 1B
(PRIOR ART)

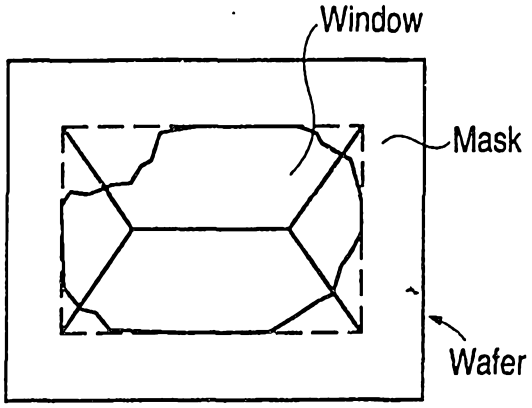

FIG. 2A
(PRIOR ART)

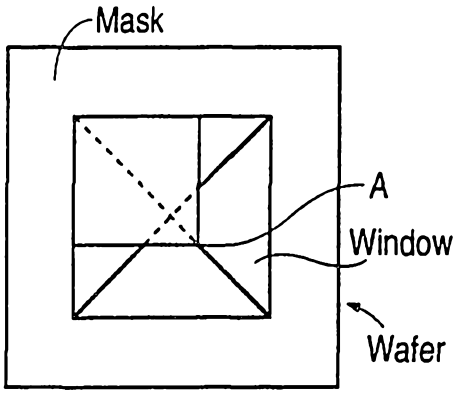

FIG. 2B
(PRIOR ART)

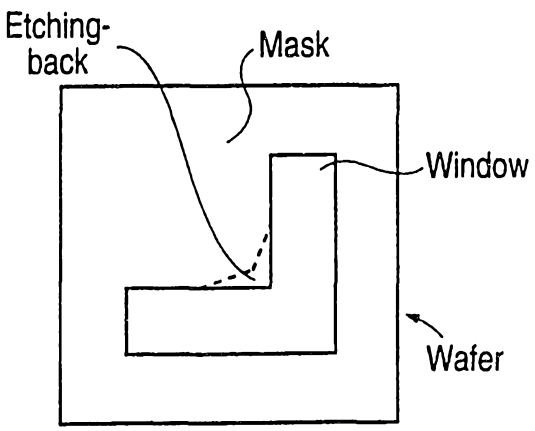

FIG. 3A
(PRIOR ART)

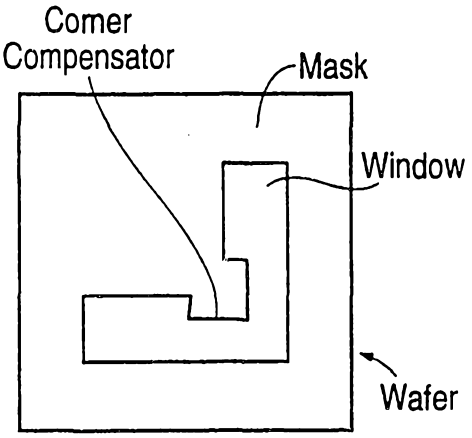

FIG. 3B
(PRIOR ART)

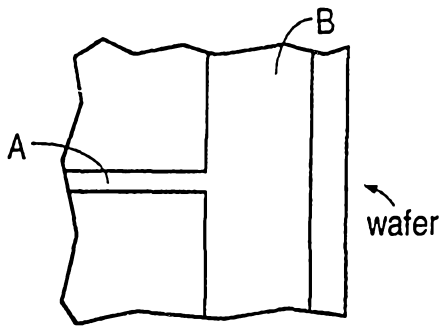

FIG. 3C

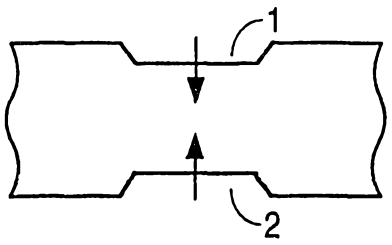

FIG. 4A
(PRIOR ART)

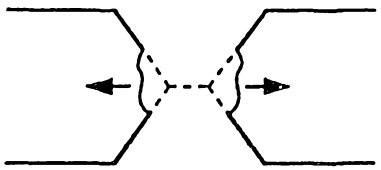

FIG. 4B
(PRIOR ART)

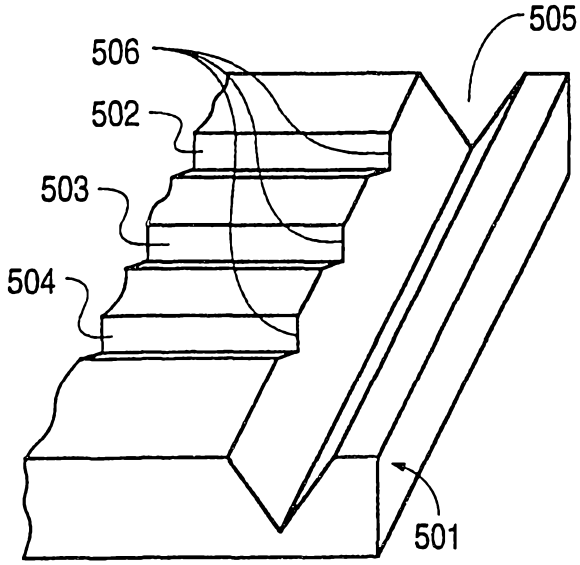

FIG. 5A

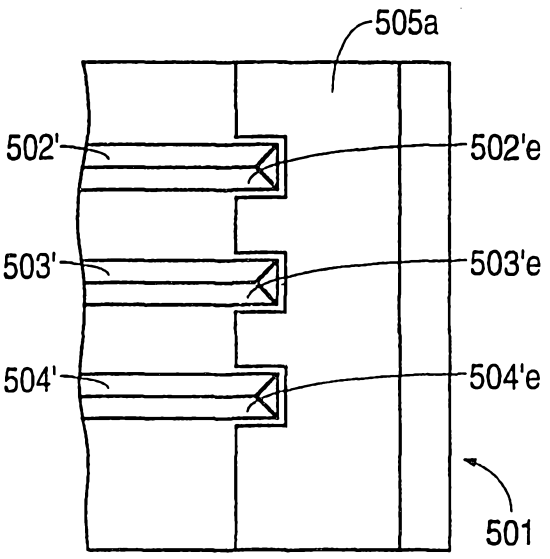

FIG. 5B

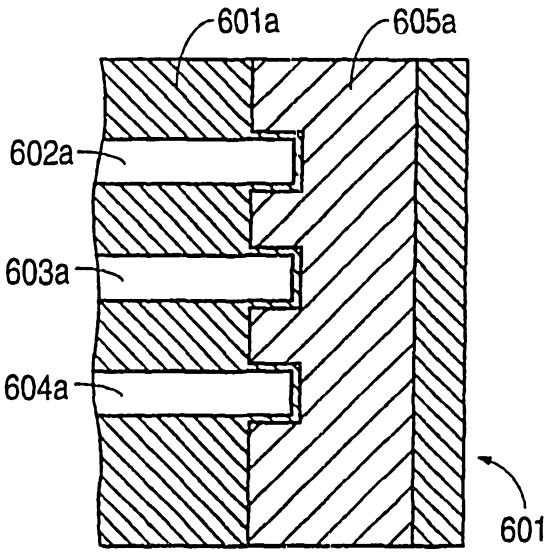

FIG. 6

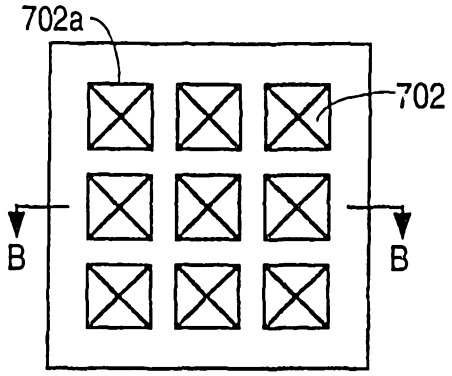

FIG. 7A

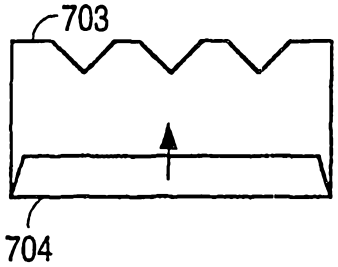

FIG. 7B

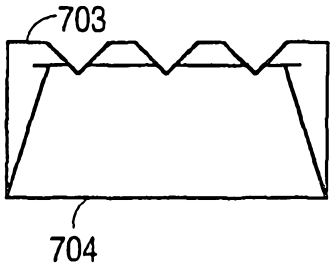

FIG. 7C

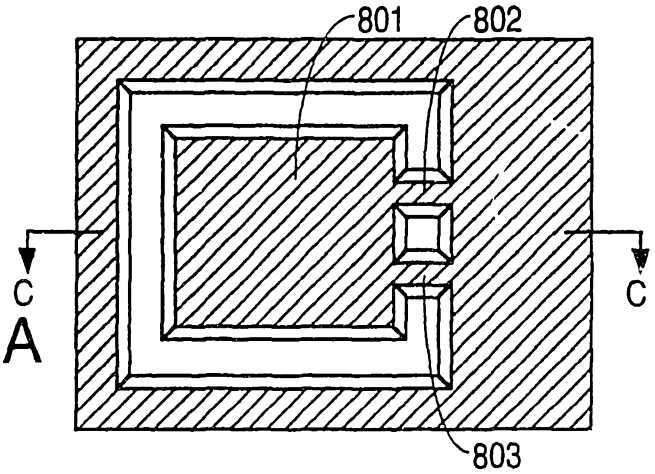

FIG. 8A

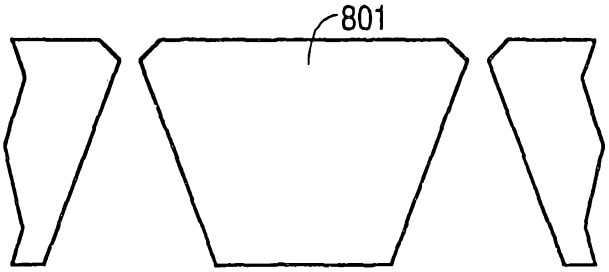

FIG. 8B

INTERNATIONAL SEARCH REPORT

International application No.
PCT/US94/01591

A. CLASSIFICATION OF SUBJECT MATTER

IPC(5) : H01L 21/306; B44C 1/22; C03C 15/00, 25/06

US CL : 156/644, 647, 651, 659.1

According to International Patent Classification (IPC) or to both national classification and IPC

B. FIELDS SEARCHED

Minimum documentation searched (classification system followed by classification symbols)

U.S. : 156/643, 644, 647, 651, 654, 657, 659.1, 661.1, 662; 437/065, 072, 073, 927

Documentation searched other than minimum documentation to the extent that such documents are included in the fields searched

Electronic data base consulted during the international search (name of data base and, where practicable, search terms used)

C. DOCUMENTS CONSIDERED TO BE RELEVANT

Category*	Citation of document, with indication, where appropriate, of the relevant passages	Relevant to claim No.
A	US,A, 4,286,374 (Hantusch) 01 September 1981 See entire document. See entire document.	1-13
A	US,A, 5,124,281 (Ackerman et al.) 23 June 1992 See entire document.	1-13
A	US,A, 4,417,946 (Bohlen et al.) 29 November 1983 See entire document	14-18
A	US,A 4,662,984 (Ohtake et. al.) 05 May 1987 See entire document.	14-18

☐ Further documents are listed in the continuation of Box C. ☐ See patent family annex.

*	Special categories of cited documents:	"T"	later document published after the international filing date or priority date and not in conflict with the application but cited to understand the principle or theory underlying the invention
"A"	document defining the general state of the art which is not considered to be of particular relevance	"X"	document of particular relevance; the claimed invention cannot be considered novel or cannot be considered to involve an inventive step when the document is taken alone
"E"	earlier document published on or after the international filing date	"Y"	document of particular relevance; the claimed invention cannot be considered to involve an inventive step when the document is combined with one or more other such documents, such combination being obvious to a person skilled in the art
"L"	document which may throw doubts on priority claim(s) or which is cited to establish the publication date of another citation or other special reason (as specified)	"&"	document member of the same patent family
"O"	document referring to an oral disclosure, use, exhibition or other means		
"P"	document published prior to the international filing date but later than the priority date claimed		

Date of the actual completion of the international search	Date of mailing of the international search report
15 APRIL 1994	MAY 24 1994
Name and mailing address of the ISA/US Commissioner of Patents and Trademarks Box PCT Washington, D.C. 20231 Facsimile No. (703) 305-3230	Authorized officer WM. A. POWELL Telephone No. (703) 308-1975

Form PCT/ISA/210 (second sheet)(July 1992)*