Oct. 4, 1955 A. C. SHERWAN 2,719,719

PUTTING DEVICE FOR GOLFERS

Filed April 14, 1953

Fig. 1

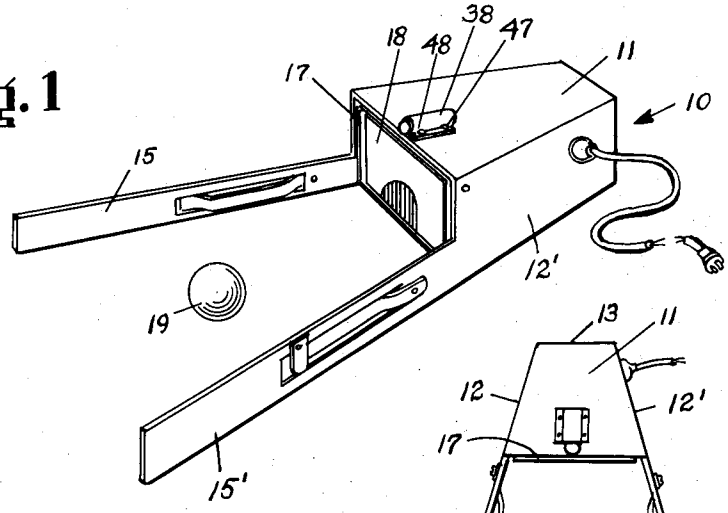

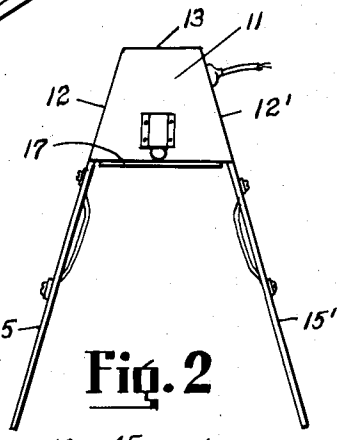

Fig. 2

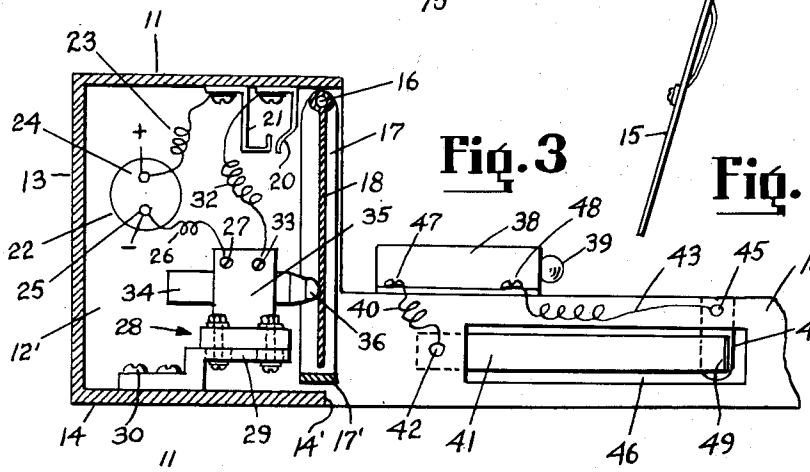

Fig. 3

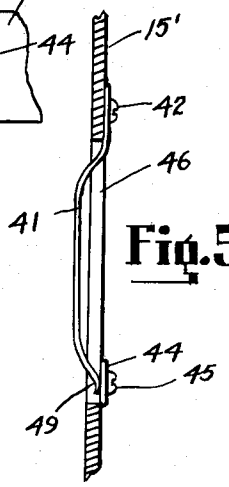

Fig. 5

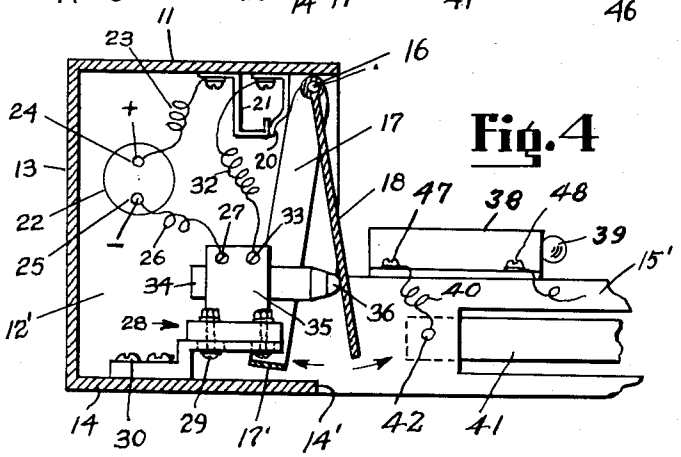

Fig. 4

INVENTOR.
AUGUST C. SHERWAN
BY
Christian R. Nielsen
ATTORNEY

United States Patent Office 2,719,719 Patented Oct. 4, 1955

2,719,719

PUTTING DEVICE FOR GOLFERS

August C. Sherwan, Milwaukee, Wis.

Application April 14, 1953, Serial No. 348,621

3 Claims. (Cl. 273—177)

My invention relates to an electrically actuated game device and more particularly to a "putting" device for golfers.

The object of my invention is to provide a device that will return a ball that is rolled toward the target plate, after the engagement of the ball with the plate.

Another object of the invention is to provide a device that may be used indoors or outdoors on any flat surface, the device being even with the floor without the use of an incline for returning the ball.

Still another object of my invention is to provide a device that is equipped with angularly disposed guide rails to guide the ball toward the target.

A further object of my invention is to equip the guide rails with switches and a signal to indicate a misdirected ball.

It is manifest to anyone familiar with playing golf that the art of "putting" on the greens of the course requires considerable skill, and it is the ambition of every golfer to excel in the art of "putting" or placing the ball into the cup on the green. Inasmuch as skill could only be accomplished by consistent practice, the device described, illustrated and claimed herein provides a simple, inexpensive, efficient means of enabling the player to accomplish the desired results, a device which will retrieve and return the ball that has been rolled toward it, so that the ball may be played again from a different angle in its relation to the target.

Obviously, there are many ways that the device may be changed and arranged for different types of games, without affecting its operativeness.

Other and further objects of my invention will become more apparent as the description proceeds when taken in conjunction with the drawings in which:

Figure 1 is a perspective view of the entire assembled device, showing the switch gate and target plate in relation to the guide rails, and showing the signal switches mounted onto the guide rails and a signal mounted to the top of the housing.

Figure 2 is a top or plane view of the device as shown in Fig. 1.

Figure 3 is a fragmentary cross-sectional view of the housing in its relation to the guide rails, showing the switch gate and target plate in a neutral position before the ball enters into engagement with the switch plate, and showing the signals mounted onto the guide rails.

Figure 4 is a similar view as shown in Fig. 3, with the switch gate making contact to actuate a solenoid for pushing the target plate outward at its lower end, for returning the ball to the player, and,

Figure 5 is a fragmentary cross-sectional view of a portion of the guide rails showing the switch arrangement for actuating the signal.

Similar characters of reference indicate corresponding parts throughout the several views, and referring now to the same the character **10** shows a housing enclosure which is closed at its top **11**, its sides **12** and **12'**, its back **13**, and at the bottom **14**. The enclosure **10** is open

at its forward face and is provided with a pair of guide rails **15** and **15'** which are angularly disposed, that is, they extend outward and are spread apart at their forward end and taper to the side walls **12** and **12'** of the enclosure.

The upper portion of the open forward end of the enclosure **10** has a shaft **16** extending across its entire length. This shaft **16** is supported by the side walls **12** and **12'** of the enclosure, and acts as a support for a switch gate **17**, and a target plate **18**, hingedly suspended therefrom.

The switch gate **17** is shown consisting of a flat band of metal formed to a rectangular U-shape and is pivotally mounted at its top end onto the shaft **16**.

The lower bar shown as **17'** of the gate **17** extends outwardly from the edge **14'** of the bottom **14** of the enclosure **10**, so that when a golf ball which is shown as **19** in Fig. 1, is rolled toward the gate **17**, it will contact the lower bar **17'** first, thereby causing the gate **17** to swing backward into the enclosure **10** at its lower end. The pivoted action of the gate **17** will force the contact **20** toward another contact **21**, as shown in Fig. 4, and, in doing so, will close the electric circuit. The attaching plug **22** in the wall **12'** of the enclosure **10** has a wire **23** leading from the positive contact **24**, to the contact **21**, and a negative contact **25** of the plug **22** has a wire **26** leading to the terminal **27** of a conventional solenoid **28**, supported on a base **29**, attached at **30** to the bottom plate **14** of the enclosure **10**, and a wire **32** leads from the terminal **33** onto solenoid **28** to the contact **20**. The attaching bolts fastening solenoid **35** to the plate **29**, may pass through elongated slots in the plate **29**, for slidable adjustment of the solenoid, thereby regulating the amount of blow that the solenoid core would impart to the target plate when the solenoid is energized.

The solenoid **28** obviously has a movable core **34**, which is slidably supported in a horizontal manner within the windings **35** of the solenoid, and the forward end of the core **34** is provided with a bumper member shown as **36**, for contact with the back surface of the target plate **18**, which plate is pivotally supported at its top by the shaft **16** within the switch gate frame **17**, thus when the switch gate **17** is contacted at the bottom **17'** by the ball **19**, it will swing the gate **17** backward thereby bringing the contact **20** into engagement with the contact **21** closing the electric circuit which energizes the solenoid **28**, and the core **35** of the solenoid **28**, would move forward momentarily, the rubber bumper **36** will contact target plate **18** momentarily, pushing it outward as shown in Fig. 4, thereby contacting the ball **19** and causing the ball **19** to be retrieved towards the player, and it may be "putted" again and again toward the target shown as **37** in Fig. 1 on the front surface of plate **18**.

The weight of the pivoted switch gate **17** will cause the gate **17** to be brought back to a normal, neutral position again as shown in Fig. 3, thereby opening the contacts **20** and **21** ready for engagement of the ball **19** with the bottom member **17'** of the switch gate to repeat the operation.

The guide rails **15** and **15'** extending outward in angular fashion from the enclosure **10**, act as guides for the ball **19** being driven toward the target plate **18**. When the ball has been misdirected and in order to record or indicate a misdirected putt, I employ a switch-actuated signal which may be mounted on the top of the enclosure as shown in Fig. 1, or on the top edge of the guide rails. This signal consists of a cylindrical housing **38**, into which a conventional dry cell (not shown) is inserted, or it may be in the form of a conventional socket into which a lamp bulb **39** is inserted, and the conductor **40** leading from the one end of the housing **38** contacts

a switch plate 41 at 42 while the other conductor 43 leading from the forward end of the housing 38 contacts a contact member 44 at 45. The switch plate 41 is resilient and extends through an elongated opening 46 of the guide rails 15 and 15'. Obviously the circuit formed by the contact 47, the wire 40, the switch plate 41, the contact 44, the wire 43, and the contact 48, causes the bulb 39 to light, when contact is made between the points at 49.

It is manifest that the opening 46 and the switch plate 41 may be of any predetermined length and when the ball 19 comes in contact with the face of the long plate 41, it will cause the lamp to indicate a "foul" or misdirected putt. The signal light may be placed at any convenient location on the device.

The device may be employed for use in many ways. For example, it is not necessary to putt a golf ball to actuate the device. The ball may be rolled by hand, and a plurality of target plates, each actuated by a separate solenoid, may be employed, without departing from the spirit of the invention.

Having thus described my invention what I claim and desire to secure by Letters Patent in the United States is:

1. A golf putting practice device comprising a base member adapted to be supported upon a substantially plane surface, a pair of divergently spaced arms mounted on the base member to project forwardly therefrom over said surface, a member mounted on the base for limited swinging movement fore and aft between the inner ends of said arms, the inner ends of said arms terminating

adjacent to the lateral confines of said swinging member to direct all balls rolled on said surface within said arms and having sufficient momentum to reach said swinging member, into contact therewith, ball return means mounted on the base, and means actuated in response to rearward movement of the swinging member when contacted by a ball, to energize the ball return means to project such ball outwardly from between said arms, said arms projecting beyond the confines of said base member to expose between the arms and forwardly of the base member the surface on which the base member may be supported, whereby to provide a substantially plane level path of approach for the balls to the swinging member.

2. The device described in claim 1 wherein the swinging member in normal position, is disposed slightly forward of the base member.

3. The device described in claim 1 wherein said ball return means includes a member movable through an opening provided in the swinging member to strike the ball.

References Cited in the file of this patent

UNITED STATES PATENTS

1,689,476	Brumder	Oct. 30, 1928
2,383,866	Kling	Aug. 28, 1945
2,462,420	Pinder	Feb. 22, 1949
2,472,187	Barker	June 7, 1949
2,582,290	Smith	Jan. 15, 1952
2,709,594	Brandell	May 31, 1955